XR-6600RDS/6700RDS

SERVICE MANUAL

AEP Model
UK Model

Photo : XR-6700RDS

Model Name Using Similar Mechanism	XR-C200MK2
Tape Transport Mechanism Type	MG-50EX2-39

SPECIFICATIONS

Cassette player section

Tape track	4-track 2-channel stereo
Wow and flutter	0.08 % (WRMS)
Frequency response	30 – 18,000 Hz
Signal-to- noise ratio	
XR-6600RDS :	58dB
XR-6700RDS :	

Cassette type	Dolby NR off	Dolby B NR
TYPE II, IV	61 dB	67 dB
TYPE I	58 dB	64 dB

Tuner section

FM

Tuning range	87.5 – 108.0 MHz
Antenna terminal	External antenna connector
Intermediate frequency	10.7 MHz
Usable sensitivity	8 dBf
Selectivity . .	75 dB at 400 kHz
Signal-to-noise ratio	65 dB (stereo), 68 dB (mono)
Harmonic distortion at 1 kHz	0.5 % (stereo), 0.3 % (mono)
Separation	35 dB at 1 kHz
Frequency response	30 – 15,000 Hz
Capture ratio	2 dB

MW/LW

Tuning range	MW: 531 – 1,602 kHz LW: 153 – 281 kHz
Antenna terminal	External antenna connector
Intermediate frequency	10.71 MHz/450 kHz
Sensitivity	MW: 30 μV LW: 50 μV

Power amplifier section

Outputs	Speaker outputs (sure seal connectors)
Speaker impedance	4 – 8 ohms
Maximum power output	XR-6700RDS : 30 W × 4 (at 4 ohms) XR-6600RDS : 25 W × 4 (at 4 ohms)

General

Outputs (XR-6700RDS)	Line output terminal Power amplifier control lead
Tone controls	Bass ±8 dB at 100 Hz Treble ±8 dB at 10 kHz
Power requirements	12 V DC car battery (negative ground)
Dimensions	Approx. 188 × 58 × 177 mm (w/h/d)
Mounting dimension	Approx. 182 × 53 × 155 mm (w/h/d)
Mass	Approx. 1.2 kg
Supplied accessories	Parts for installation and connections (1 set) Front panel case (1)

Design and specifications are subject to change without notice.

MICROFILM

FM/MW/LW CASSETTE CAR STEREO

SONY®

TABLE OF CONTENTS

Location of Controls

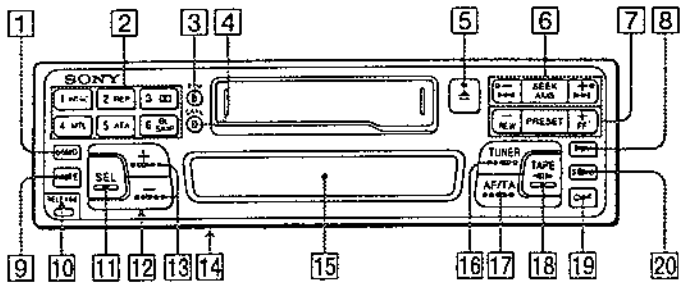

Refer to the pages in ● for further details.

1. LOUD (loudness) button ⑫
2. During radio reception:
   Preset number buttons ❽
   During tape playback:
   - 1 INTRO INTRO button ❻
   - 2 REP REPEAT button ❻
   - 3 DD (Dolby B NR) button ❻
   - 4 MTL MTL (Cassette type select) button ❻
   - 5 ATA ATA (Automatic Tuner Activation) button ❻
   - 6 BL.SKIP BL.SKIP button ❻
3. BTM (Best Tuning Memory) button ❺⑪
4. DSPL (display mode change/time set) button ❺❼❾
5. ⏏ (eject) button ❺⑫
6. SEEK/AMS button ❻❼⑪
7. PRESET button ❻❽
8. PTY (programme type) button ⑪
9. MUTE button ⑫
10. RELEASE (front panel release) button ❹⑬
11. SEL (control mode select) button ❺⑩⑫⑬
12. Reset button (located on the front side of the unit hidden by the front panel) ❹
    Press this button when you use this unit for the first time, when you have changed the car battery, or when the buttons of this unit do not function properly.
13. (volume/bass/treble/balance/fader control) button ❺⑫
14. POWER SELECT switch (located on the bottom of the unit)
    See "POWER SELECT Switch" in the installation/connections manual.
15. Display window
16. TUNER (radio on/band select) button ❺❼❽
17. AF/TA (alternative frequency/traffic announcement) button ❺⑩⑪
18. TAPE/◄II► (playback/transport direction change) button ❺
19. OFF button ❹❺⑫
20. SENS (sensitivity adjust) button ❼

Setting the Clock

The clock has a 24-hour digital indication.

For example, setting it to 10:08

1 Display the time.
(Press the DISPL button during the unit operation.)

2 Press the DISPL button for more than two seconds.

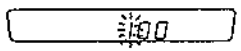

The hour digit blinks.

Set the hour digits.

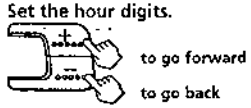

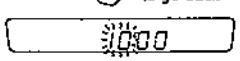

3 Press the SEL button momentarily.

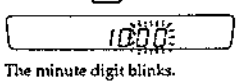

The minute digit blinks.

Set the minute digits.

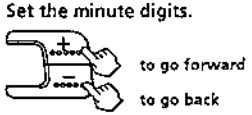

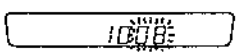

4 Press the DISPL button momentarily.

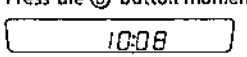

The clock activates.

Note
If the POWER SELECT switch on the bottom of the unit is set to the ❸ position, the clock cannot be set unless the power is turned on. Set the clock after you have turned on the radio, or started cassette playback.

EN

Cassette Player Operation

Listening to Tape Playback

After inserting the cassette, playback will start automatically.

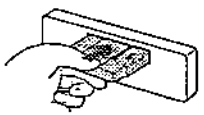

If a cassette is already inserted, press the TAPE button to start playback.
If you press during playback, the tape transport direction will change.

Indication of Tape Transport Direction

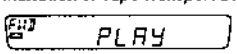

The side facing up is being played.

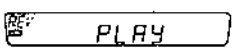

The side facing down is being played.

To stop playback,

eject the cassette by pressing the ⏏ button or press the OFF button.
Playback stops also when you select radio by pressing the TUNER button.

Changing the Displayed Items

Each time you press the DISPL button, the displayed items change as follows:

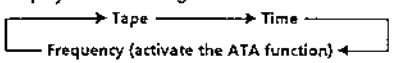

Ejecting the Cassette

Press the ⏏ button.

EN

SECTION 1
GENERAL

Cassette Player Operation

This section is extracted from XR-6700RDS's instruction manual.

Fast-winding the Tape

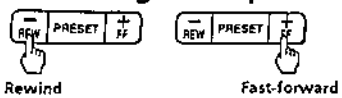

To start playback during rewinding or fast-forwarding, press the button.

Playing a Tape Recorded in the Dolby B NR System

Press the 3 button when you want to listen to a tape recorded in the Dolby B NR system. → "DO" appears in the display.
To cancel, press again.

Playing a CrO_2 or Metal Tape

Press the 4 button when you want to listen to a CrO_2 (TYPE II) or metal (TYPE IV) tape. → "MTL" will appear on the display.
To cancel, press again.

Locating the Beginnings of the Tracks

— AMS (Automatic Music Sensor) Function

During playback, press either side of the SEEK/AMS button the number of times you wish to skip the tracks.

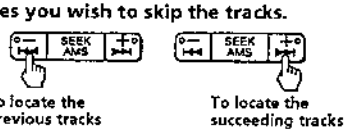

Up to nine tracks can be skipped.

If the blanks between the tracks are shorter than four seconds, or if there are noises, the AMS function will not work. Also, the unit may read long sections of low volume music or quiet sections on a track as blanks between tracks.

Searching the Desired Track — Intro Scan Function

Press the 1 button during playback. → "INTRO" appears on the display.
The first 10 seconds of all the tracks are played. When you find the desired track, press the button once more. The unit returns to the normal playback mode.

Playing Tracks Repeatedly

— Repeat Play Function

Press the 2 button during playback. → "REP" appears on the display.
When the currently played track is over, it will be played again from the beginning.
To cancel this mode, press the button again.

Radio Reception during Fast-forwarding or Rewinding of a Tape

— ATA (Automatic Tuner Activation) Function

Press the 5 button during playback. → "ATA" appears on the display.
When fast-forwarding or rewinding with the button, the tuner will turn on automatically.

Skipping Blanks Automatically during Tape Playback — Blank Skip Function

Press the 6 button during playback. → "BL.SKIP" appears on the display.
Blanks longer than eight seconds will be automatically skipped during tape playback.

Radio Reception

Searching for the Stations Automatically

— Automatic Tuning

1 Select the desired band.

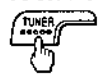

FM1 → FM2 → FM3 → MW → LW → FM1 → ...

2 Press either side of the SEEK/AMS button to search for the station (automatic tuning).

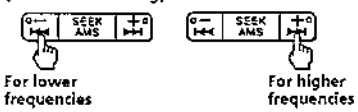

The scanning stops when a station is received. Press either side of the button repeatedly until the desired station is received.

When an FM stereo program with a sufficient signal strength is tuned in,

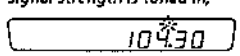

the "ST" indication will appear.

To avoid the automatic tuning from stopping on stations too frequently (local seek mode), press the SENS button momentarily to get the "LCL" indication.
Only the stations with relatively strong signals can be tuned in. The local seek mode functions only when the automatic tuning is in operation.

Changing the Display Items

Each time you press the DISP button, the displayed items between frequency and time.

If FM Stereo Reception is Poor — Monaural Mode

Press the SENS button momentarily. → "MONO" appears on the display.
The sound will improve, but it will become monaural.

Tuning in by Adjusting the Frequency — Manual Tuning

1 Select the desired band.

2 Press and hold either side of the SEEK/AMS button.
Release the button when the desired station is received.

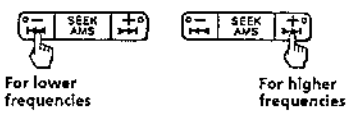

PREVENTING ACCIDENTS!
When tuning in during driving, use the automatic tuning and the memory preset search function (page 8) instead of the manual tuning.

Memorizing Stations Automatically

— BTM (Best Tuning Memory) Function

This function selects from the currently received band the stations with the strongest signals and memorizes them in order of their frequency.

1 Select the desired band.

continue to next page →

2 *Press the ⑧ button for more than two seconds.*
- When there is no preset number indicated on the display window, stations will be stored on all preset number buttons on the currently selected band.
- When there is a preset number indicated on the display window, the unit will store stations on all preset number buttons from the one currently displayed.

For example, when you select FM2 and preset number 3 is displayed,
the operation will start from preset number 3 on FM2, and will stop at preset number 6 on FM3.

Memorizing Only the Desired Stations

1 Select the desired band.

2 Tune in the station which you wish to store on the preset number button.

3 Keep the desired preset number button (1 INTRO to 6 SKIP) pressed for about two seconds until you hear a beep tone.

The number of the pressed preset number button appears on the display window.

Up to 6 stations on each band (FM1, FM2, FM3, MW and LW) can be stored on the preset number buttons in order of your choice. Therefore, 18 stations can be memorized on FM.
If you try to store another station on the same preset number button, the previously stored station will be erased.

Receiving the Memorized Stations

1 Select the desired band.

2 Press momentarily the preset number (1 INTRO to 6 SKIP) button on which the desired station is stored.

Note
If you press the preset number button for more than two seconds, the currently received station will be memorized again. To receive the previously memorized station, make sure that the preset number button is pressed only momentarily.

Press either side of the PRESET button momentarily to receive in order the stations stored in the memory (Preset Search Function).

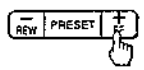

Press momentarily
1 → 2 → ··· → 5 → 6 → 1 → ···

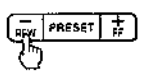

Press momentarily
1 → 6 → 5 → ··· → 2 → 1 → ···

RDS Functions

Overview of the RDS Function

Radio Data System (RDS) is a broadcasting service that allows FM stations to send additional digital information along with the regular radio programme signal. Your car stereo offers you a variety of services. Here are just a few: Re-tuning the same programme automatically, Listening to traffic announcements and Locating a station by programme type.

Notes
- *Depending on the country or region, not all of the RDS functions are available.*
- *RDS may not work properly if the signal strength is weak or if the station you are tuned in is not transmitting RDS data.*

Displaying the Station Name

The name of the station currently received lights up in the display.

Select an FM station.
When you tune in an FM station that transmits RDS data, the station name lights up in the display.

FM1 BBC R1

Note
The "" indication means that an RDS station is being received.*

Changing the Displayed Items

Each time you press the ⑥ button, the displayed items change as follows:

→ Frequency → Time → Station Name →

Note
"NO NAME" lights up if the station received does not transmit RDS data.

Re-tuning the Same Programme Automatically

— Alternative Frequencies (AF)

The Alternative Frequencies (AF) function automatically selects and re-tunes the station with the strongest signal in a network. By using this function, you can continuously listen to the same programme during a long-distance drive without having to re-tune the station manually.

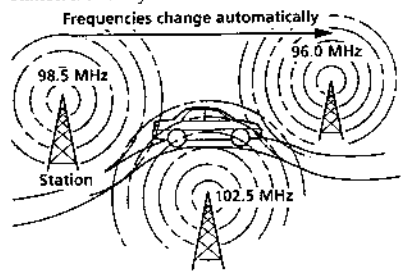

1 Select an FM station.

2 Press the AF/TA button until "AF ON" lights up in the display.
The unit starts searching for an alternative station with a stronger signal in the same network.

Note
When there is no alternative station in the area and you don't need to search for an alternative station, turn the AF function off by pressing the AF/TA button until "AF/TA OFF" lights up.

Changing the Displayed Items

Each time you press the AF/TA button, the displayed items change as follows:

→ AF ON → TA ON → AF/TA ON* → AF/TA OFF →

** Select this to turn on both AF and TA functions.*

Notes
- *"NO AF" and the station name flashes alternately, if the unit cannot find an alternative station in the network.*
- *If the station service name starts flashing after you've made the preset selection, it means that no alternative frequency is available and the unit cannot receive the PI (Programme Identification) data of the memorized station. Press the SEEK/AMS button while the station service name is flashing (for about eight seconds) so the unit starts searching for a station with the same PI data, but with another frequency ("PI SEEK" lights up and no sound is heard). If the unit still cannot find an alternative station, "NO PI" lights up and the unit goes back to the original preset station.*

Listening to a Regional Programme

The "REG ON" (regional on) function of this unit lets you stay tuned to a regional programme without being switched to another regional station. (Note that you must turn the AF function on.) The unit is factory preset to "REG ON", but if you want to turn off the function, do the following.

Press the [AF/TA] button for more than two seconds until "REG OFF" lights up on the display.
Note that selecting "REG OFF" might cause the unit to switch to another regional station within the same network.

Note
This function does not work in the United Kingdom and in some other areas.

Local Link Function (United Kingdom only)

The Local Link function lets you select other local stations in the area, even though they are not stored in your presets.

1 Press a preset number button that has stored a local station.

2 Within five seconds, press again the preset number button of the local station.

3 Repeat this procedure until the desired local station is received.

Listening to Traffic Announcements

The Traffic Announcement (TA) and Traffic Programme (TP) data let you automatically tune in an FM station that is broadcasting traffic announcements even though you are listening to other programme sources.

Press the [AF/TA] button until "TA ON" or "AF/TA ON" lights up on the display.
The unit starts searching for traffic information stations. "TP" lights up in the display when the unit finds a station broadcasting traffic announcements.
When the traffic announcement starts, "TA" flashes, then flashing stops when the traffic announcement is over.

Tip
When the traffic announcement starts while you are listening to another programme source, the unit automatically switches to the announcement and goes back to the original source when the announcement is over.

Notes
- *"NO TP" flashes for five seconds if the received station doesn't broadcast traffic announcements. Then, the unit starts searching for a station that does broadcast traffic announcements.*
- *When the "EON" indication appears with "TP" in the display window, the current station makes use of broadcast traffic announcements of other stations in the same network.*

To Cancel the Current Traffic Announcement

Press the [AF/TA] button momentarily.
To cancel all traffic announcements, turn off the function by pressing the [AF/TA] button until "AF/TA OFF" lights up.

Presetting the volume of traffic announcements

You can preset the volume level of the traffic announcements beforehand so you wouldn't miss the announcement. When a traffic announcement starts, the volume will be automatically adjusted to the preset level.

1 Select the desired volume level.

2 Press the [3] button while pressing the [SEL] button.
A beep sounds and the setting is stored.

Receiving Emergency Announcements

If an emergency announcement comes in while you are listening to the radio, the programme will be automatically switched to the announcement. If you are listening to a source other than the radio, the emergency announcements will be heard if you set AF or TA to on. The unit will then automatically switch to these announcements no matter what you are listening to at the time.

Presetting the RDS Stations with the AF and TA Data

When you preset the RDS stations, the unit stores each station's data as well as its frequency, so you don't have to turn on the AF or TA function every time you tune in the preset station. You can select different setting (AF, TA, or both) for individual preset station or the same setting for all preset stations.

Presetting the Same Setting for all Preset Stations

1 Select an FM band.

2 Press the [AF/TA] button repeatedly and select either "AF ON", "TA ON" or "AF/TA ON" (for both AF and TA functions).
Note that selecting "AF/TA OFF" stores not only RDS stations, but also non-RDS FM stations.

3 Press the [8] button for more than two seconds.

Presetting different settings for each preset station

1 Select an FM band and tune in the desired station.

2 Press the [AF/TA] button repeatedly and select either "AF ON", "TA ON" or "AF/TA ON" (for both AF and TA functions).

3 Press the desired preset number button for two seconds until a beep sounds. Repeat from step 1 for presetting other stations.

Tip
If you want to change the preset AF and/or TA setting after you tuned in the preset station, you can do so by turning on/off the AF or TA function.

Locating a Station by Programme Type

You can locate the station you want by selecting one of the programme types shown below.

Note
If the countries or regions where EON data is not transmitted, you can use this function only for the stations you have tuned in once.

Programme types	Display
News	NEWS
Current Affairs	AFFAIRS
Information	INFO
Sport	SPORT
Education	EDUCATE
Drama	DRAMA
Culture	CULTURE
Science	SCIENCE
Varied	VARIED
Popular Music	POP M
Rock	ROCK M
Middle of the Road Music	M.O.R. M
Light Classical	LIGHT M
Classics	CLASSICS
Other Music Types	OTHER M
Not specified	NONE

Note
You cannot use this function in some countries where no PTY (Programme Type selection) data is available.

1 Press the [PTY] button during FM reception until "PTY" lights up in the display.

PTY INFO

The current programme type name appears if the station is transmitting the PTY data. "- - - - -" appears if the received station is not an RDS station or if the RDS data has not been received.

2 Press the [PTY] button repeatedly until the desired programme type appears.
The programme types appear in the order as shown in the above table. Note that you cannot select "NONE" (Not specified) for searching.

PTY SPORT

3 Press either side of the SEEK/AMS button.
The unit starts searching for a station broadcasting the selected programme type.

continue to next page →

When the unit finds the programme, the programme type appears again for five seconds.
"NO" and the programme type appear alternately for five seconds if the unit cannot find the programme type and it returns to the previous station.

Using RDS Data for Setting the Clock Automatically

By receiving CT (Clock Time) data, the clock of this unit can be set automatically.

During FM reception, press the [2 REP] button while pressing the [SEL] button. → "CT" will be displayed, and the clock will be set.

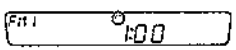

To cancel the CT function, press these buttons again.

Notes
- *The CT function may not work even though an RDS station is being received.*
- *The time set by the CT function may not be exact.*

EN

Other Functions

Adjusting the Sound Characteristics

1 Select the item you want to adjust by pressing the [SEL] button repeatedly.

VOL (volume) → BAS (bass) → TRE (treble) → BAL (balance) → FAD (fader) → VOL (volume) → ···

2 Adjust the selected item by pressing either the [+] or [−] button.

Adjust within three seconds after selecting. (After three seconds the button will again serve as volume control button.)

Enjoying Bass and Treble even at Low Volume

— Loudness Function

Press the [LOUD] button. → "LOUD" will appear on the display.
Bass and treble will be reinforced. To cancel, press again.

Muting the Sound Quickly

— Mute Function

Press the [MUTE] button. → The "MUTE" indication flashes.
The sound is muted at once. To restore the previous volume level, press again.

This function will be also cancelled when:
— the [+] or OFF button is pressed.
— ejecting a cassette by pressing the ⏏ button during tape playback.

Muting the Beep Tone

Press the [6 BL SUP] button while pressing the [SEL] button.

To reobtain the beep tone, press these buttons again.

Changing the Illumination Colour

Press the [1 NTRO] button while pressing the [SEL] button.
You can choose the colour between amber and green.

Connections

Caution

- This unit is designed for negative ground 12 V DC operation only.
- Connect the power connecting cord Ⓢ to the unit and speakers before connecting it to the auxiliary power connector.
- **Run all ground wires to a common ground point.**

If Your Car has No Accessory Position on the Ignition Key Switch — POWER SELECT Switch

The illumination on the front panel is factory-set to be turned on even when the unit is not being played. However, this setting may cause some car battery wear if **your car has no accessory position on the ignition key switch.** To avoid this battery wear, **set the POWER SELECT switch located on the bottom of the unit to the ⓪ position, then press the reset button.** The illumination is reset to stay off while the unit is not being played.

Note

The caution alarm for the front panel is not activated when the POWER SELECT switch is set to the ⓪ position.

Connexions

Précautions

- Cet appareil est conçu pour fonctionner sur un courant continu de 12 V avec masse négative.
- Branchez le cordon d'alimention Ⓢ sur l'appareil et les haut-parleurs avant de le brancher sur le connecteur d'alimentation auxiliaire.
- **Rassembler tous les fils de terre en un point de masse commun.**

Si l'appareil est utilisé dans une voiture dont la clé de contact n'a pas de position accessoires — Interrupteur POWER SELECT

L'éclairage du panneau avant est réglé en usine de manière à s'allumer même quand l'appareil ne fonctionne pas. Cependant, ce réglage risque d'épuiser la batterie **si l'appareil est utilisé dans une voiture dont la clé de contact ne possède pas de position accessoires.** Pour éviter d'épuiser la batterie, régler **l'interrupteur POWER SELECT sur le socle de l'appareil sur la position ⓪, puis appuyer sur la touche de réinitialisation.** L'éclairage est réglé pour rester éteint quand l'appareil n'est pas utilisé.

Remarque

Quand l'interrupteur POWER SELECT est réglé sur la position ⓪, l'avertisseur du panneau avant ne fonctionne pas

Anschluß

Vorsicht

- Dieses Gerät ist ausschließlich für eine negativ geerdete 12-V-Autobatterie bestimmt.
- Verbinden Sie das Netzverbindungskabel Ⓢ mit dem Gerät und den Lautsprechern, bevor Sie es mit dem Hilfsstromanschluß verbinden.
- **Schließen Sie alle Erdungskabel an einen gemeinsamen Massepunkt an.**

Wenn das Zündschloß Ihres Wagens keine Position I bzw. ACC besitzt — POWER SELECT-Schalter

Das Gerät ist werkseitig so voreingestellt, daß das Bedienfeld auch dann beleuchtet ist, wenn das Gerät nicht betrieben wird. Besitzt das Zündschloß Ihres Fahrzeugs **keine Position I bzw. ACC, so ist die Beleuchtung ständig eingeschaltet** und entzieht der Batterie Strom. Stellen Sie in einem solchen Fall **den POWER SELECT-Schalter an der Unterseite des Geräts auf Position ⓪, und drücken Sie dann die Rücksetztaste.** Bei ausgeschaltetem Gerät ist das Bedienfeld dann nicht mehr beleuchtet.

Hinweis

Der Warnton für die Frontplatte ertönt nicht, wenn der POWER SELECT-Schalter auf Position ⓪ gestellt ist.

Collegamenti

Attenzione

- Questo apparecchio è stato progettato per l'uso solo a 12 V CC con massa negativa.
- Collegare il cavo di collegamento dell'alimentazione Ⓢ all'apparecchio e agli altoparlanti prima di collegarlo al connettore di alimentazione ausiliare.
- **Portare tutti i cavi di massa a un punto di massa comune.**

Quando si usa l'apparecchio in un'auto priva di posizione accessoria per la chiavetta di accensione — Interruttore POWER SELECT

L'illuminazione del pannello anteriore è stata predisposta in fabbrica per l'attivazione anche quando non si usa l'apparecchio. Tuttavia questa regolazione può causare scaricamento della batteria dell'auto **se si usa l'apparecchio in un'auto priva di posizione accessoria per la chiavetta di accensione.** Per evitare ciò, **regolare su ⓪ l'interruttore POWER SELECT situato alla base dell'apparecchio e quindi premere il tasto di azzeramento.** L'illuminazione rimane così spenta finché l'apparecchio rimane spento.

Nota

La sirena di avvertimento per il pannello anteriore non si attiva quando l'interruttore POWER SELECT è in posizione ⓪.

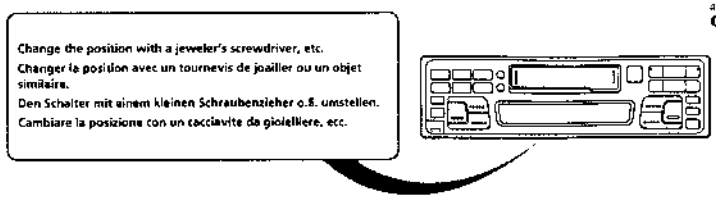

Reset Button

When the installation and connections are over, be sure to press the reset button with a ballpoint pen etc.

Touche de réinitialisation

Quand l'installation et les connexions sont terminées, appuyer sur la touche de réinitialisation avec un stylo bille ou un objet pointu.

Rücksetztaste

Nach der Installation und dem Anschluß muß die Rücksetztaste mit einem Kugelschreiber o.ä. gedrückt werden.

Pulsante di azzeramento

Dopo avere terminato l'installazione e i collegamenti, assicurarsi di premere il pulsante di azzeramento con la punta di una penna a sfera ecc.

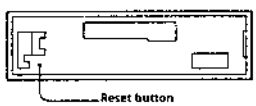

Note on the control leads

The power antenna control lead (blue) supplies + 12 V DC when you turn on the tuner or when you activate the ATA (Automatic Tuner Activation), AF (Alternative Frequency) or the TA (Traffic Announcement) Function.

Memory hold connection

When the yellow power input lead is connected, power will always be supplied to the memory circuit even when the ignition key is turned off.

Notes on speaker connection

- *Before connecting the speakers, turn the unit off.*
- *Use speakers with an impedance of 4 to 8 ohms, and with adequate power handling capacities. Otherwise, the speakers may be damaged.*
- *Do not connect the terminals of the speaker system to the car chassis, and do not connect the terminals of the right speaker with those of the left speaker.*
- *Do not attempt to connect the speakers in parallel.*
- *Do not connect any active speakers (with built-in amplifiers) to the speaker terminals of the unit. Doing so may damage the active speakers. Therefore, be sure to connect passive speakers to these terminals.*

Warning

If you have a power antenna without a relay box, connecting this unit with the supplied power connecting cord Ⓢ may damage the antenna.

Remarque sur les fils de contrôle

Le fil de contrôle (bleu) de l'antenne électrique fournit un courant continu de +12 V quand le tuner est allumé ou quand la fonction ATA (Activation automatique du tuner), AF (Fréquences alternatives) ou TA (informations routières) est mise en service.

Connexion pour le maintien de la mémoire

Lorsque le fil d'entrée d'alimentation jaune est connecté, le circuit de la mémoire est alimenté en permanence même si la clé de contact est sur la position d'arrêt

Remarques sur la connexion des haut-parleurs

- *Avant de raccorder les haut-parleurs, mettre l'appareil hors tension.*
- *Utiliser des haut-parleurs ayant une impédance de 4 à 8 ohms et une capacité adéquate sous peine de les endommager.*
- *Ne pas raccorder les bornes du système de haut-parleurs au châssis de la voiture et ne pas connecter les bornes du haut-parleur droit à celles du haut-parleur gauche.*
- *Ne pas tenter de raccorder les haut-parleurs en parallèle.*
- *Ne pas connecter d'enceintes acoustiques actives (avec amplificateurs intégrés) aux bornes d'enceintes de cet appareil pour éviter de les endommager. Veiller à raccorder des enceintes passives.*

Avertissement

Si vous disposez d'une antenne électrique sans boîtier de relais, le branchement de cet appareil au moyen du cordon d'alimentation fourni Ⓢ risque d'endommager l'antenne.

Hinweis zu den Steuerleitungen

Die (blaue) Motorantennen-Steuerleitung liefert eine Gleichspannung von +12 V, wenn der Tuner eingeschaltet, die ATA-Funktion (Automatic Tuner Activation), die AF-Funktion (Alternative Frequency) oder die TA-Funktion (Traffic Announcement) aktiviert ist.

Zur Stromversorgung des Speichers

Wenn das gelbe Stromversorgungskabel angeschlossen ist, wird der Speicher stets (auch bei ausgeschalteter Zündung) mit Strom versorgt.

Hinweise zum Lautsprecheranschluß

- *Schalten Sie das Gerät aus, bevor Sie die Lautsprecher anschließen.*
- *Verwenden Sie Lautsprecher mit einer Impedanz zwischen 4 und 8 Ohm und ausreichender Belastbarkeit. Ansonsten können die Lautsprecher beschädigt werden.*
- *Verbinden Sie die Lautsprecheranschlüsse nicht mit dem Wagenchassis, und verbinden Sie auch nicht die Anschlüsse des rechten mit denen des linken Lautsprechers.*
- *Versuchen Sie nicht, Lautsprecher parallel anzuschließen.*
- *An die Lautsprecheranschlüsse dieses Geräts dürfen nur Passivlautsprecher angeschlossen werden. Schließen Sie keine Aktivlautsprecher (Lautsprecher mit eingebauten Verstärkern) an, da diese sonst beschädigt werden können.*

Warnung

Wenn Sie eine Mastantenne ohne Relaiskästchen verwenden, kann durch Anschließen dieses Geräts mit Hilfe des mitgelieferten Netzverbindungskabels Ⓢ die Antenne beschädigt werden.

Nota sui cavidi collegamento

Il cavo di controllo antenna automatica (blu) fornisce +12 V CC quando si accende il sintonizzatore, quando si attiva la funzione ATA (Attivazione automatica sintonizzatore), la funzione AF (frequenze alternative) o TA (notiziari sul traffico).

Collegamento per la conservazione della memoria

Quando il cavo di ingresso alimentazione giallo è collegato, viene sempre fornita alimentazione al circuito della memoria anche quando la chiavetta di accensione è spenta.

Note sul collegamento dei diffusori

- *Prima di collegare i diffusori spegnere l'apparecchio.*
- *Usare diffusori di impedenza compresa tra 4 e 8 ohm e con capacità di potenza adeguata, altrimenti i diffusori possono essere danneggiati.*
- *Non collegare i terminali del sistema diffusori al telaio dell'auto e non collegare i terminali del diffusore destro a quelli del diffusore sinistro.*
- *Non collegare i diffusori in parallelo.*
- *Non collegare alcun diffusore attivo (con amplificatore incorporato) ai terminali diffusori dell'apparecchio perché questo può danneggiare i diffusori attivi. Assicurarsi di collegare diffusori passivi a questi terminali.*

Avvertenza

Se l'antenna che collega l'apparecchio tramite il cavo di alimentazione in dotazione Ⓢ non ha la scatola di relè dell'antenna, si può danneggiare.

Connections of Example / Connexions de l'exemple / Anschlußbeispiel / Esempi di Collegamento

RCA pin cord (RC-63 (1 m), RC-64 (2 m) or RC-65 (5 m)) (not supplied)
Cordon à broche RCA (RC-63 (1 m), RC-64 (2 m) ou RC-65 (5 m)) (non fourni)
RCA-Kabel (RC-63 (1 m), RC-64 (2 m) oder RC-65 (5 m)) (nicht mitgeliefert)
Cavo a terminali RCA (RC-63 (1 m), RC-64 (2 m) o RC-65 (5 m)) (non in dotazione)

LINE OUT

from car antenna
de l'antenne de la voiture
von Autoantenne
dall'antenna dell'auto

REMOTE IN

Fuse (15 A)
Fusible (15 A)
Sicherung (15 A)
Fusibile (15 A)

Power amplifier
Amplificateur de puissance
Endverstärker
Amplificatore di potenza

Rear speakers
Haut-parleurs arrière
Hecklautsprecher
Diffusori posteriori

Rotary commander (RM-X25) (not supplied)
Satellite de commande (RM-X25) (non fourni)
Drehschalter-Fernbedienung (RM-X25) (nicht mitgeliefert)
Telecomando a rotazione (RM-X25) (non in dotazione)

Blue/white striped
Rayé bleu/blanc
Blau-weiß gestreift
Astrice blu e bianche

AMP REM

Max. supply current 0.3 A
Courant max. fourni 0,3 A
max. Versorgungsstrom 0,3 A
Alimentazione massima fornita 0,3 A

(XR-6700RDS only)
(XR-6700RDS uniquement)
(nur XR-6700RDS)
(solo XR-6700RDS)

WARNING

Auxiliary power connectors may vary depending on the car.
Be sure to check the power connection diagram sheet supplied with the unit. Improper connections may damage your car. If the supplied power connecting cord can not be used with your car, consult your nearest Sony dealer.

AVERTISSEMENT

Le connecteur d'alimentation auxiliaire peut varier suivant le type de voiture. Vérifiez le schéma du connexion d'alimentation furni avec l'appareil. Un raccordement incorrect risque d'occasionner des dommages à votre voiture. Si le cordon d'alimentation fourni ne peut être utilisé avec votre voiture, consultez votre revendeur Sony.

VORSICHT

Die Hilfsstromanschlüsse können je nach Fahrzeugtyp unterschiedlich sein. Sehen Sie im Hilfsstromanschlußdiagramm für Ihr Fahrzeug nach, wie die Verbindungen ordnungsgemäß vorgenommen werden müssen. Fehlerhafte Verbindungen können zu Schäden an Ihrem Fahrzeug führen. Wenn das mitgelieferte Netzverbindungskabel nicht für den Einsatz in Ihrem Fahrzeug geeignet ist, wenden Sie sich bitte an Ihren Sony-Händler.

Attenzione

Il connettore di alimentazione ausiliare può variare a seconda del tipo di macchina. Controllare il foglio con il diagramma del connettore di alimentazione in dotazione con l'apparecchio, connessioni non corrette potrebbero danneggiare la macchina. Se il cavo di collegamento dell'alimentazione in dotazione non pu essere utilizzato con la vostra auto, consultare il revenditore Sony pi u vicino.

to an auxiliary power connector
vers un connecteur d'alimentation auxiliaire
an Hilfsstromanschluß
a un connettore di alimentazione ausiliare

to a speaker connector
vers un connecteur de haut-parleur
an Lautsprecheranschluß
a un connettore dell'altoparlante

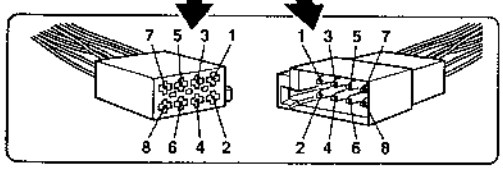

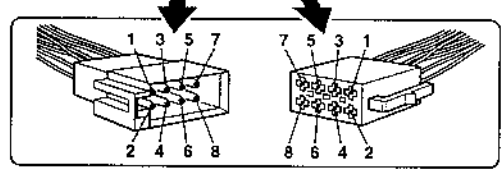

Pin / Broche / Stift / Pin	Colour / Couleur / Farbe / Colore	Function / Fonction / Funktion / Funzione	Pin / Broche / Stift / Pin	Colour / Couleur / Farbe / Colore	Function / Fonction / Funktion / Funzione
4	Yellow / Jaune / Gelb / Giallo	continuous power supply / alimentation continue / permanente Stromversorgung / alimentazione continua	7	Red / Rouge / Rot / Rosso	switched power supply / alimentation commutée / geschaltete Stromversorgung / alimentazione a scatto
5	Blue / Bleu / Blau / Blu	power antenna control / antenne électrique / elektronische Antenne / antenna elettrica	8	Black / Noir / Schwarz / Nero	ground / masse / Masse / terra

Positions 1, 2, 3 and 6 do not have pins.
Les positions 1, 2, 3 et 6 ne comportent pas de broche.
An Position 1, 2, 3 und 6 befinden sich keine Stifte.
Le posizioni 1, 2, 3 e 6 non hanno pin.

Pin / Broche / Stift / Pin	Colour / Couleur / Farbe / Colore	Function / Fonction / Funktion / Funzione	Pin / Broche / Stift / Pin	Colour / Couleur / Farbe / Colore	Function / Fonction / Funktion / Funzione
1	Purple / Mauve / Violett / Viola	+: Speaker, Rear, Right / +: haut-parleur, arrière, droit / +: Lautsprecher hinten rechts / Altoparlante, posteriore, destro	5	White / Blanc / Weiß / Bianco	+: Speaker, Front, Left / +: haut-parleur, avant, gauche / +: Lautsprecher vorne links / Altoparlante, anteriore, sinistro
2		–: Speaker, Rear, Right / –: haut-parleur, arrière, droit / –: Lautsprecher hinten rechts / Altoparlante, posteriore, destro	6		–: Speaker, Front, Left / –: haut-parleur, avant, gauche / –: Lautsprecher vorne links / Altoparlante, anteriore, sinistro
3	Gray / Gris / Grau / Grigio	+: Speaker, Front, Right / +: haut-parleur, avant, droit / +: Lautsprecher vorne rechts / Altoparlante, anteriore, destro	7	Green / Vert / Grün / Verde	+: Speaker, Rear, Left / +: haut-parleur, arrière, gauche / +: Lautsprecher hinten links / Altoparlante, posteriore, sinistro
4		–: Speaker, Front, Right / –: haut-parleur, avant, droit / –: Lautsprecher vorne rechts / Altoparlante, anteriore, destro	8		–: Speaker, Rear, Left / –: haut-parleur, arrière, gauche / –: Lautsprecher hinten links / Altoparlante, posteriore, sinistro

Negative polarity positions 2, 4, 6, and 8 have striped cords.
Les positions de polarité négative 2, 4, 6 et 8 sont dotées de cordons rayés.
An den negativ gepolten Positionen (2, 4, 6 und 8) befinden sich farbige Adern.
Le posizioni a polarità negativa 2, 4, 6 e 8 hanno cavi rigati.

SECTION 2
DISASSEMBLY

Note : Follow the disassembly procedure in the numerical order given.

2-1. SUB PANEL ASSY

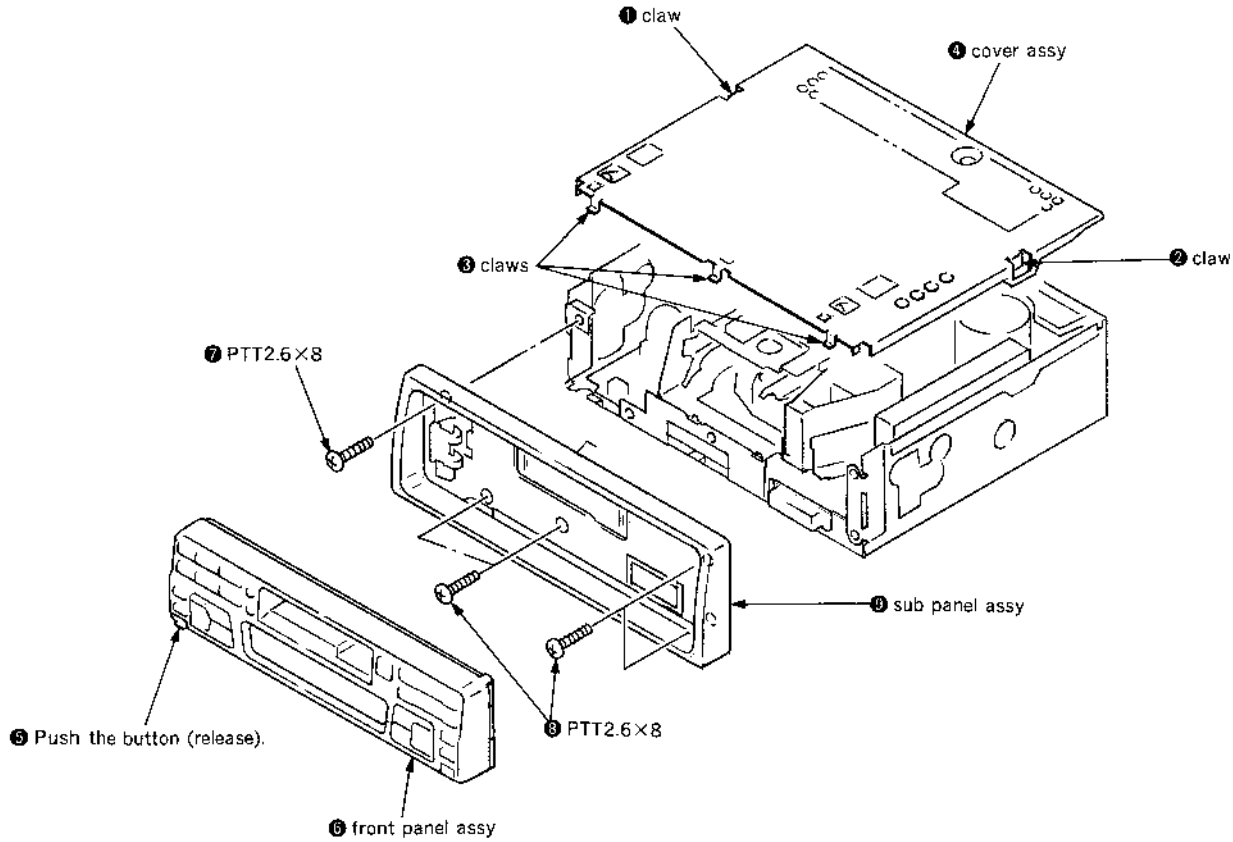

2-2. AMPLIFIER BOARD

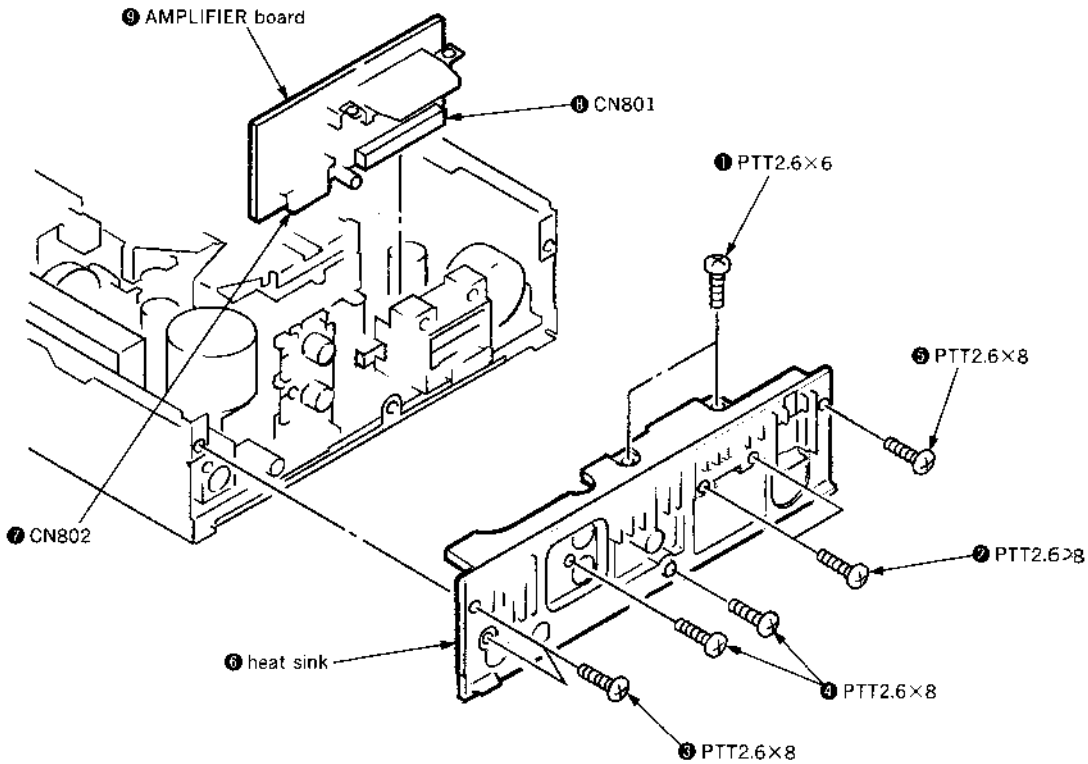

2-3. MECHANISM DECK BLOCK

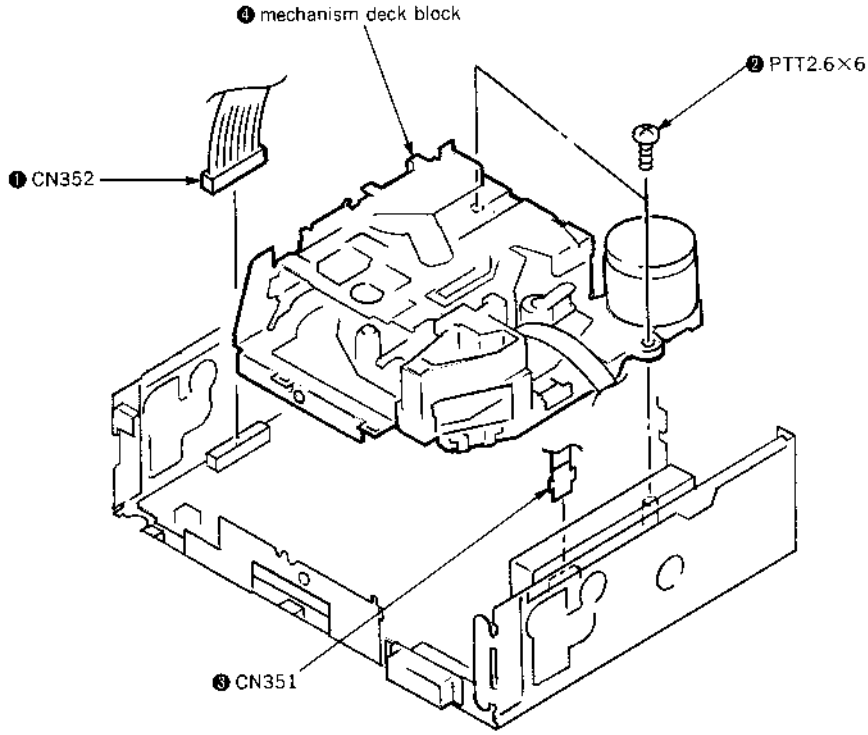

2-4. MAIN BOARD

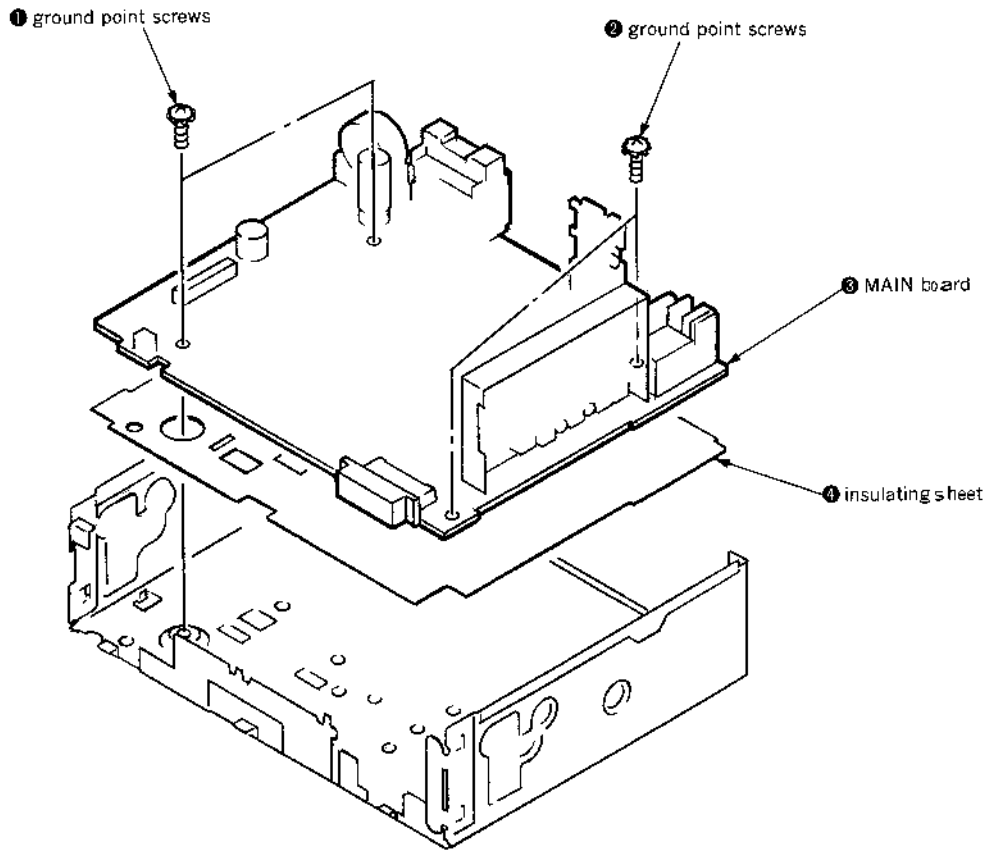

2-5. KEY BOARD

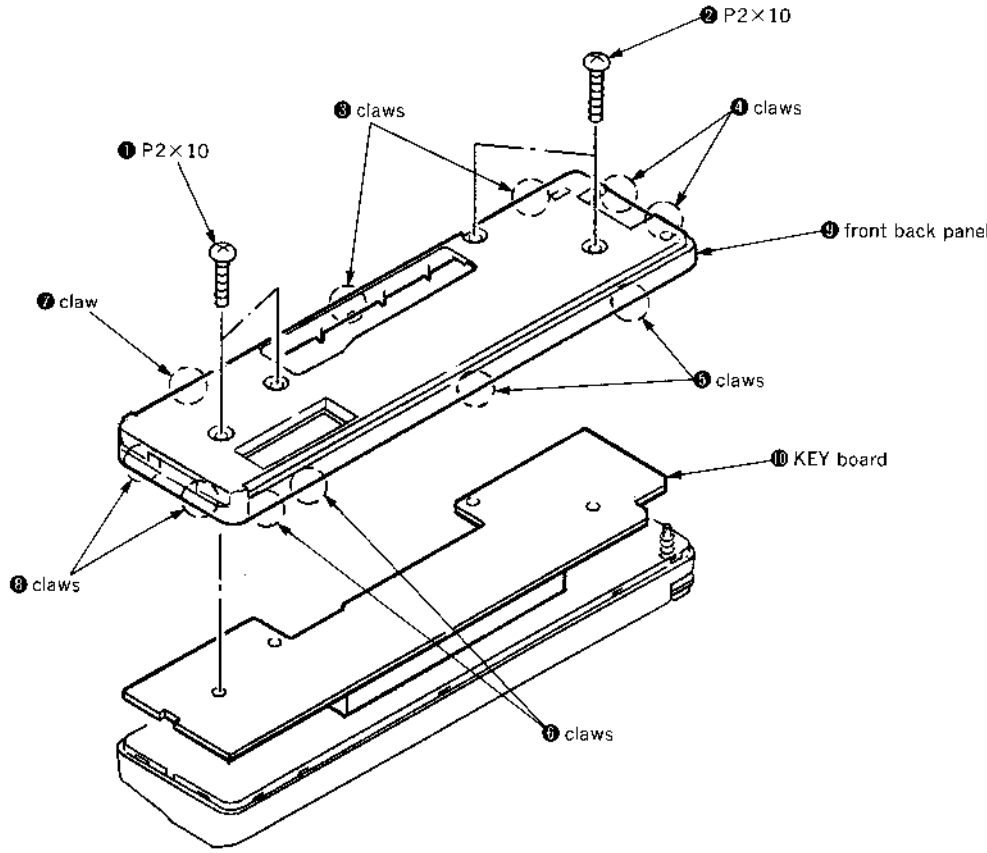
❷ P2×10
❸ claws
❹ claws
❶ P2×10
❾ front back panel
❼ claw
❺ claws
❿ KEY board
❽ claws
❻ claws

SECTION 3
ASSEMBLY OF MECHANISM DECK

Note: Follow the assembly procedure in the numerical order given.

3-1. INSTALLING THE LOADING GEARS

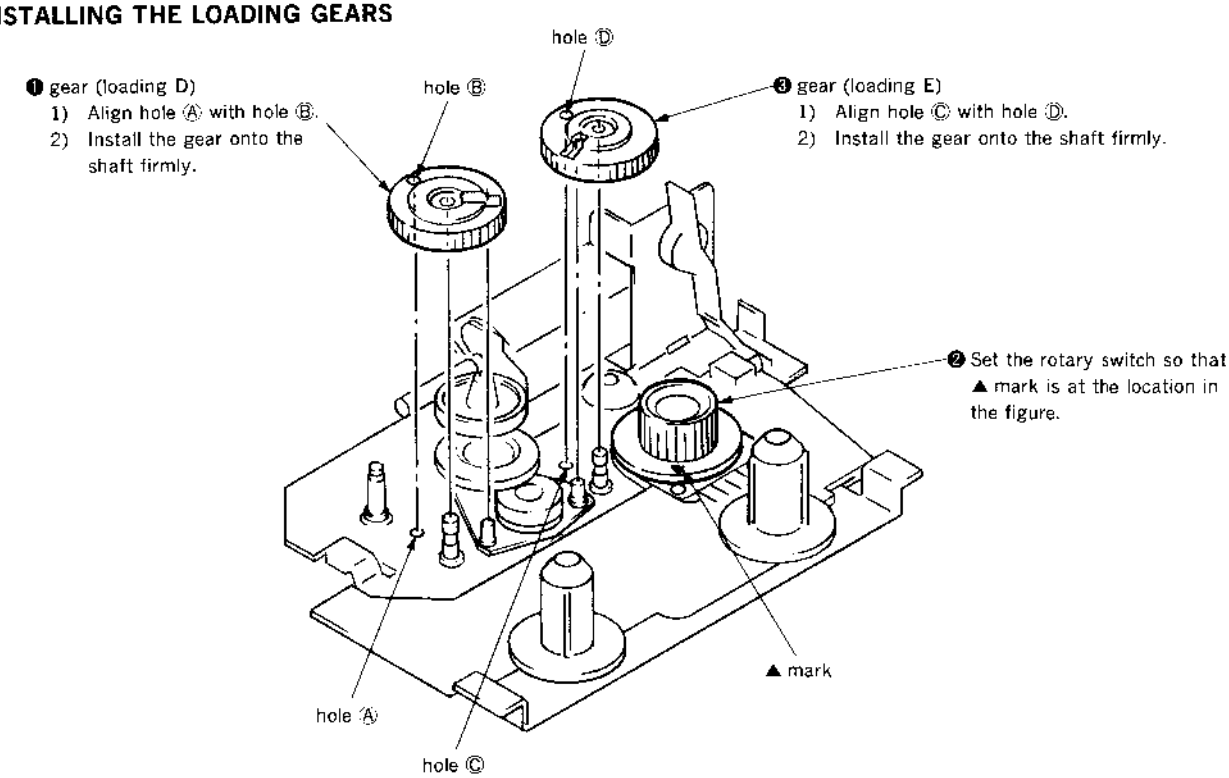

3-2. INSTALLING THE REEL BRACKET

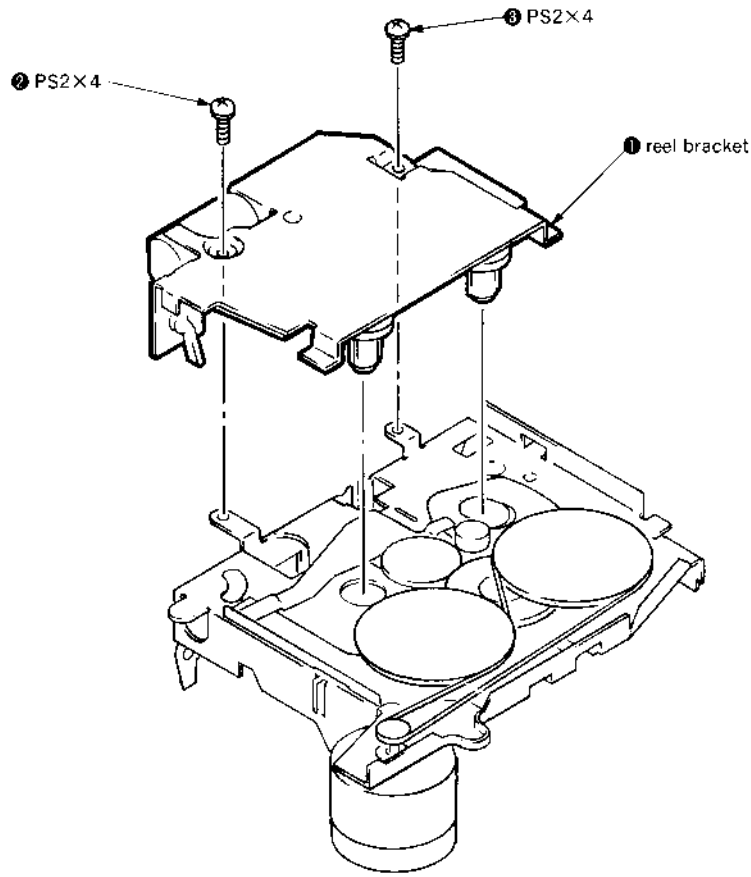

3-3. INSTALLING THE MODE LEVER AND PINCH LEVERS

❾ stopper washer
❻ step screw (HB)
⓫ stopper washer
❽ pinch lever (F) (See Fig. 2)
❿ pinch lever (R) (See Fig. 2)
❹ washers
❺ step screw (HB)
shaft Ⓐ
❷ pinch press spring
❸ head base
1) Fit A part in the mechanical chassis.
2) Make sure that the shaft Ⓐ is put in the groove in the mode lever.
A part
❶ mode lever (See Fig. 1)
❷ washers
mechanical chassis

1) Align • mark on the rotary switch with hole on the mode lever.
2) Make sure that the two shafts and three projections are located as shown below.

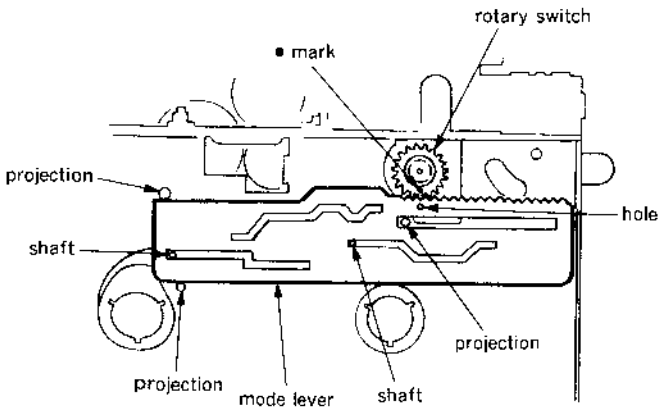

Fig. 1

1) Put the shafts of the pinch levers in the pinch press spring on its head side.

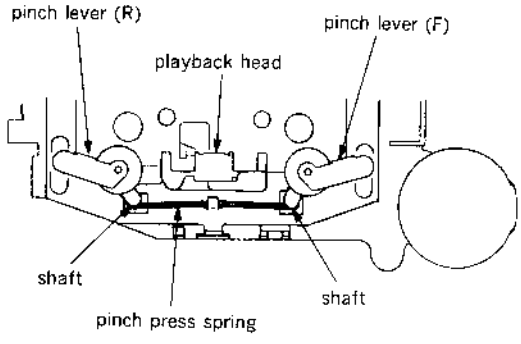

Fig. 2

3-4. INSTALLING THE CASSETTE HOUSING

❸ housing hanger
1) Fit three projections in holes on the mechanical chassis.
2) Bend C part in the direction of the arrow and fasten to prevent dislocation from the chassis.

❷ claws

❶ cassette housing
1) Put the cassette housing under A part.
2) Fit B part in groove Ⓐ.

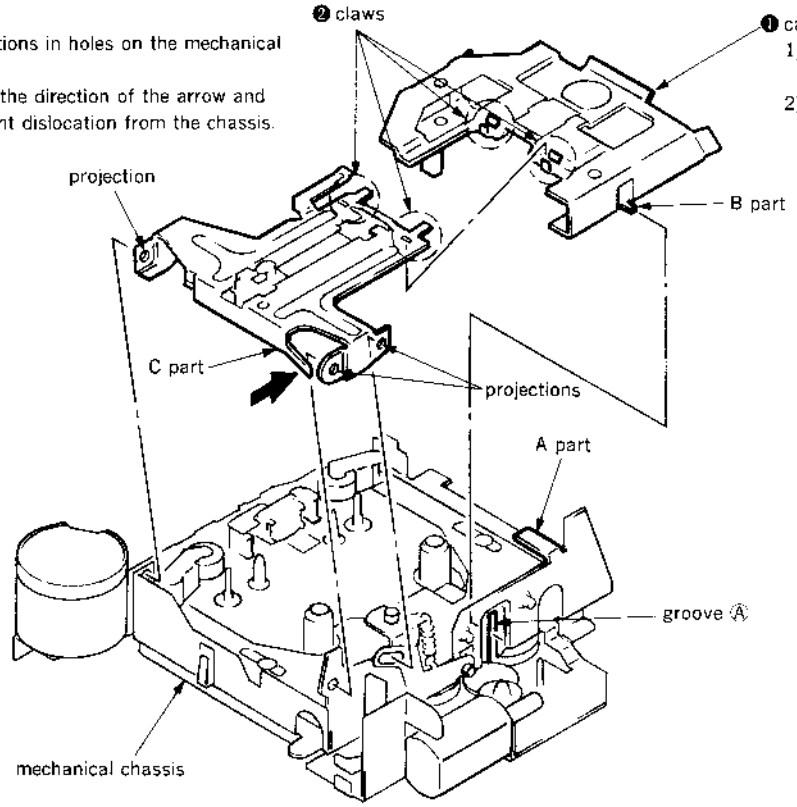

3-5. INSTALLING THE LOADING LEVER

❶ suction arm
1) Align with axis Ⓐ and install the arm onto the claw.
2) With the claw in the center, rotate the arm so as to be directed along axis Ⓑ, then fit the arm on the projection.

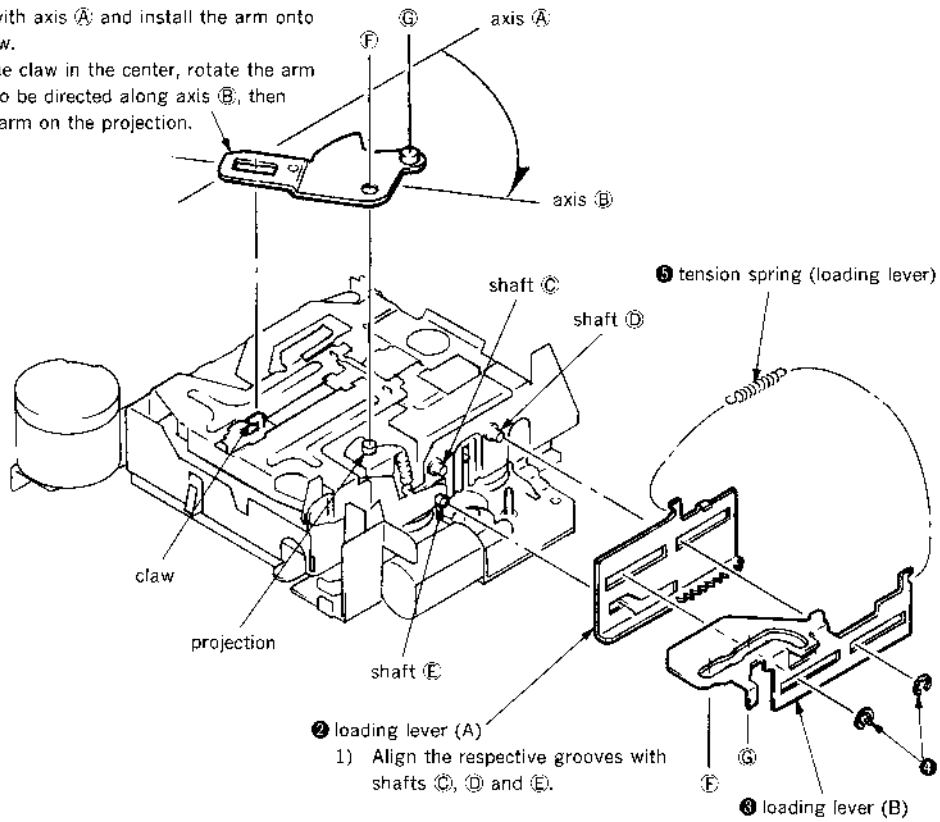

❷ loading lever (A)
1) Align the respective grooves with shafts Ⓒ, Ⓓ and Ⓔ.

❹ type-E stop ring 2.0

❸ loading lever (B)
1) Align the respective grooves with shafts Ⓒ and Ⓓ.
2) Align the groove with Ⓕ and Ⓖ.

3-6. POSITIONING THE LOADING LEVERS

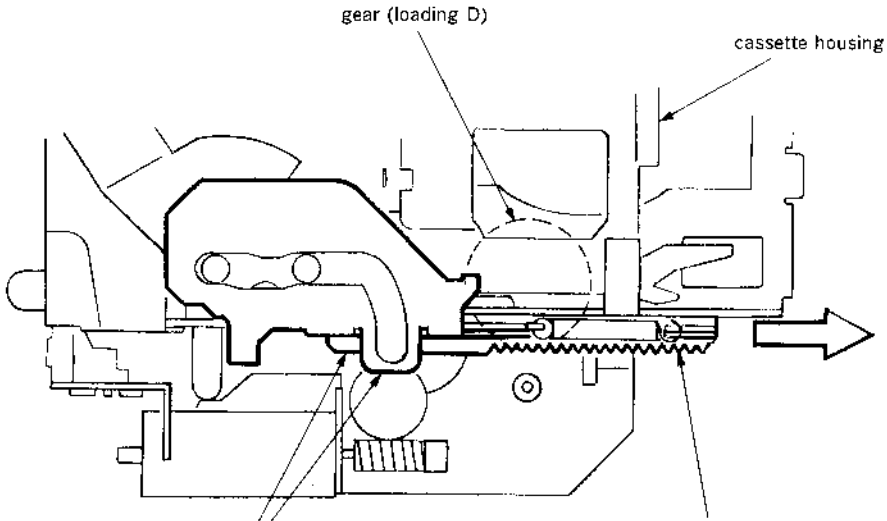

❶ Loading levers (A) and (B) : Move loading levers (A) and (B) in the direction of the arrow.
(The cassette housing is put down fully at this time.)

❷ Loading lever (A) : Allow the teeth of loading lever (A) to engage with those of the gear (loading D).
(Adjustment method : Retract loading lever (A) by 0.2 to 0.5mm in the opposite direction of the arrow.)

3-7. INSTALLING THE GEAR (LOADING F)

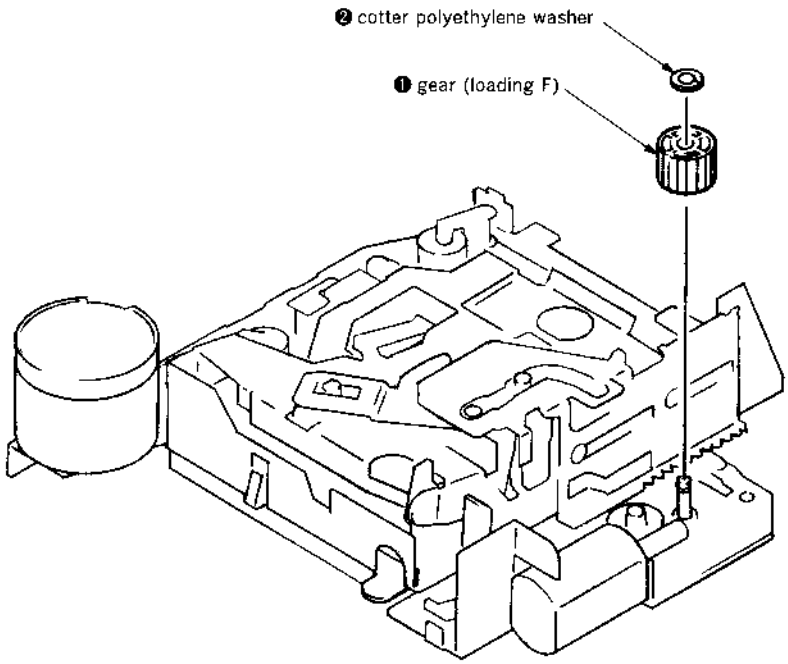

SECTION 4
MECHANICAL ADJUSTMENTS

PRECAUTION

1. Wipe the following components with an absorbent cotton cloth moistened with alcohol before adjustment:
   PB head　　Pinch roller
   Idler　　Rubber belt
   Capstan
2. Demagnetize the PB head using a head demagnetizer.
3. Be careful not to use a magnetized screwdriver.
4. After the adjustment is completed, lock the adjustment parts using screws.
5. Unless otherwise specified, make adjustments at the specified voltage (14.4V).

Torque Measurement

Mode	Torque Meter	Meter Reading
FWD	CQ-102C	30−65g·cm (0.42−0.90 oz·inch)
FWD Back Tension		0.5−4.5g·cm (0.01−0.06 oz·inch)
REV	CQ-102RC	30−65g·cm (0.42−0.90 oz·inch)
REV Back Tension		0.5−4.5g·cm (0.01−0.06 oz·inch)
FF, REW	CQ-201B	60−200g·cm (0.83−2.78 oz·inch)

Tape Tension Measurement

Mode	Tension Meter	Meter Reading
FWD	CQ-403A	more than 90g (more than 3.18 oz)
REV	CQ-403R	

SECTION 5
ELECTRICAL ADJUSTMENTS

TEST MODE

This set have the test mode function. In the test mode, FM Auto Scan/Stop Level and MW Auto Scan/Stop Level adjustments can be performed easier than it in ordinaly procedure.

<Set the Test Mode>

1. Set the "OFF" mode.
2. Push the preset [4] button.
3. Push the preset |5| button.
4. Press the preset [1] button for more than two seconds.
5. Then the display indicates all lights, the test mode is set.

<Release the Test mode>

1. Push the "OFF" button.

See the adjustment location from on page 21 for the adjustment.

DECK SECTION | **0dB=0.775V**

Tape Speed Adjustment

Procedure:

1. Put the set into the FWD PB mode.

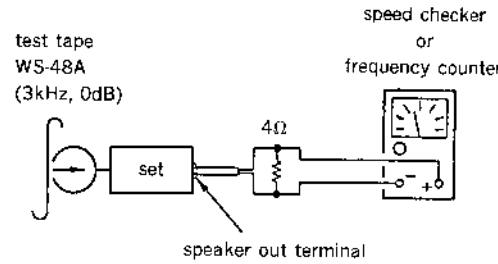

Specification: Constant speed

Speed checker	Frequency counter
−1.5 to +2.5%	2,955 to 3,075Hz

Adjustment Location: See page 21.

DOLBY Level Adjustment (XR-6700RDS only)

Setting:

Preset [3] (DOLBY) button : OFF
SEL (BAS) button : Center
SEL (TRE) button : Center
SEL (BAL) button : Center
SEL (FAD) button : Center
SEL (VOL) button : Maximum

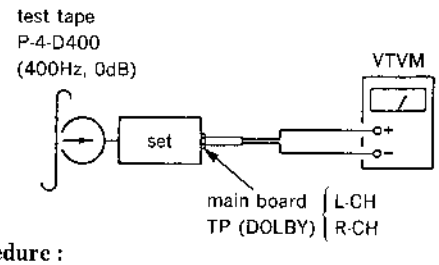

Procedure:

1. Put the set into the FWD PB mode.
2. Adjust RV301 (R-CH) and RV401 (L-CH) so that VTVM reading is −6±0.5 dB (0.37 to 0.41V).

Adjustment Location: See page 21.

TUNER SECTION | **0dB=1μV**

Cautions during repair
When the front end is defective, replace it by a new one because its internal block is difficult to repair.

FM Auto Scan/Stop Level Adjustment

Setting :

TUNER button : FM

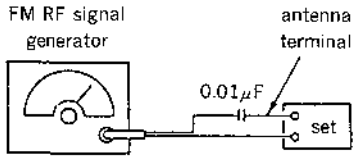

Carrier frequency : 98.00MHz
Output level : 22dB (12.6μV)
Mode : mono
Modulation : 1kHz, 22.5kHz deviation

Procedure :

1. Set to the test mode. (See page 17.)
2. Push the TUNER button and set to FM.

Display

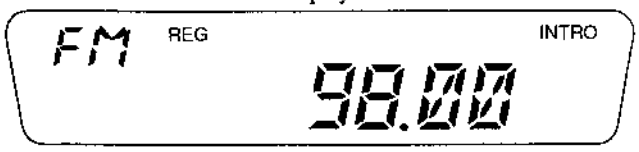

3. Adjust with the volume RV2 on TU1 so that the "FM" indication turns to "FM0" indication on the display window.
   But, in case of already indicated "FM0", turn the RV2 so that put out light "0" indication and adjustment.

Display

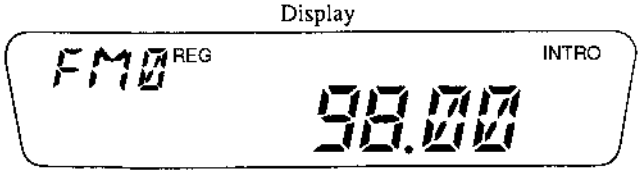

Adjustment Location : See page 21.

FM Stereo Separation Adjustment

Setting :

TUNER button : FM

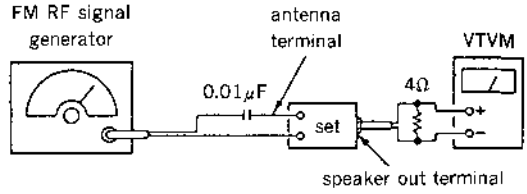

Carrier frequency : 98.00MHz
Output level : 70dB (3.2mV)
Mode : stereo
Modulation : main : 1kHz, 20kHz deviation (53%)
sub : 1kHz, 20kHz deviation (53%)
19kHz pilot : 7.5kHz deviation (10%)

Procedure :

FM stereo signal generator output channel	VTVM connection	VTVM reading (dB)
L-CH	L-CH	Ⓐ
R-CH	L-CH	Ⓑ Adjust RV4 on TU1 for minimum reading.
R-CH	R-CH	Ⓒ
L-CH	R-CH	Ⓓ Adjust RV4 on TU1 for minimum reading.

L-CH Stereo separation : Ⓐ−Ⓑ
R-CH Stereo separation : Ⓒ−Ⓓ
The separations of both channels should be equal.

Specification : Separation more than 30dB

Adjustment Location : See page 21.

FM Noise Focus Adjustment

Setting :

TUNER button : FM

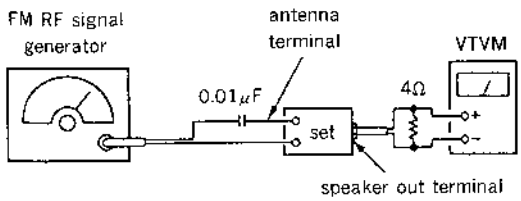

Carrier frequency : 98.00MHz
Output level : 60dB (1mV)
Mode : mono
Modulation : 1kHz, 75kHz deviation

Procedure :

1. Tune the 98.00MHz.
2. The then output level is supposing that (B) dB.
3. Adjust with the volume RV3 on TU1 so that the output level is (B) 32dB then signal generator input set to −20dB.

Adjustment Location : See page 21.

FM Signal Meter Adjustment

Setting :

TUNER button : FM

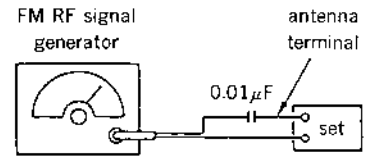

Carrier frequency : 98.00MHz
Output level : 35dB (56.2μV)
Mode : mono
Modulation : no modulation

Procedure :

1. Set to the test mode. (See page 17.)
2. Push the [TUNER] button and set to FM.

Display

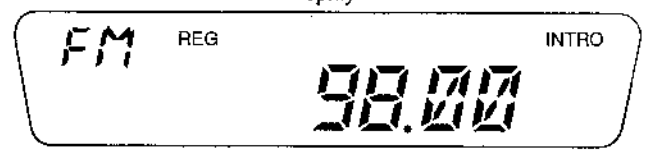

3. Push the preset [6] button.
4. Adjust RV1 so that the display indication is "118".

Display

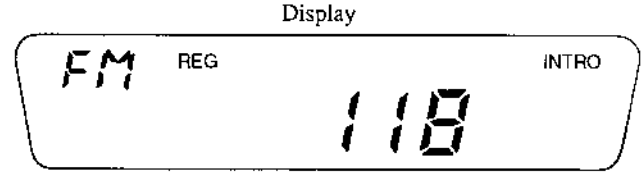

Specification : Display indication : 116 to 120

Adjustment Location : See page 21.

MW Auto Scan/Stop Level Adjustment

Setting :

TUNER button : MW

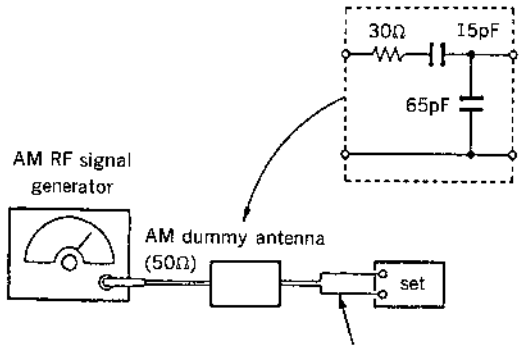

Carrier frequency : 999kHz
30% amplitude modulation by 400Hz signal
Output level : 33dB (44.7μV)

Procedure :

1. Set to the test mode. (See page 17.)
2. Push the TUNER button and set to MW.

Display

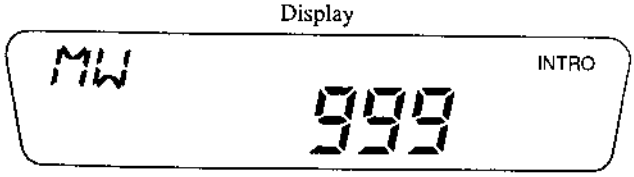

3. Adjust with the volume RV1 on TU1 so that the "MW" indication turns to "MW0" indication on the display window.
   But, in case of already indicated "MW0", turn the RV1 so that put out light "0" indication and adjustment.

Display

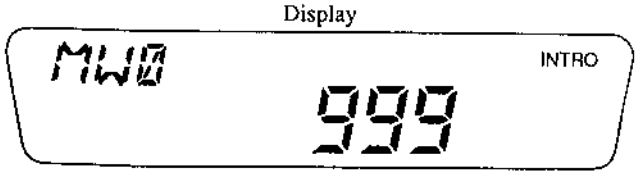

Adjustment Location : See page 21.

Adjustment Location :

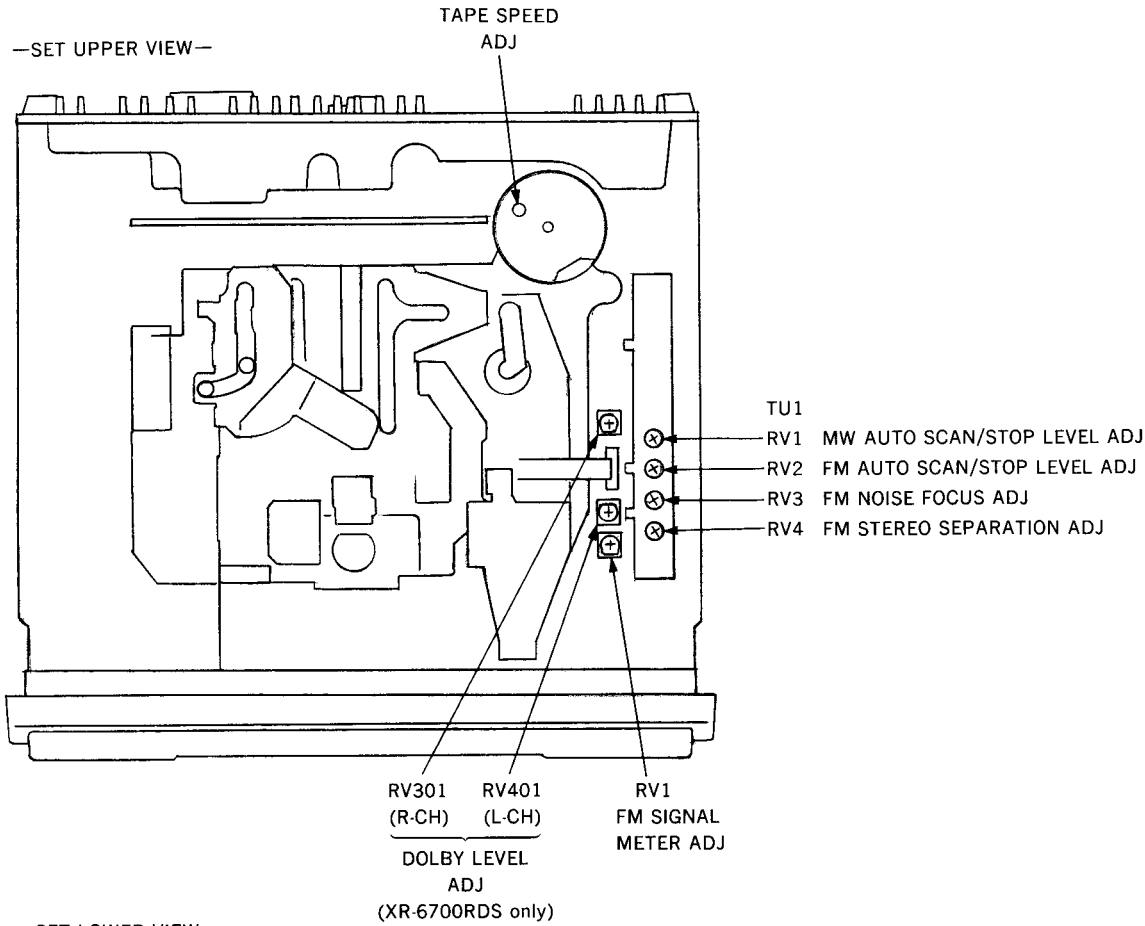

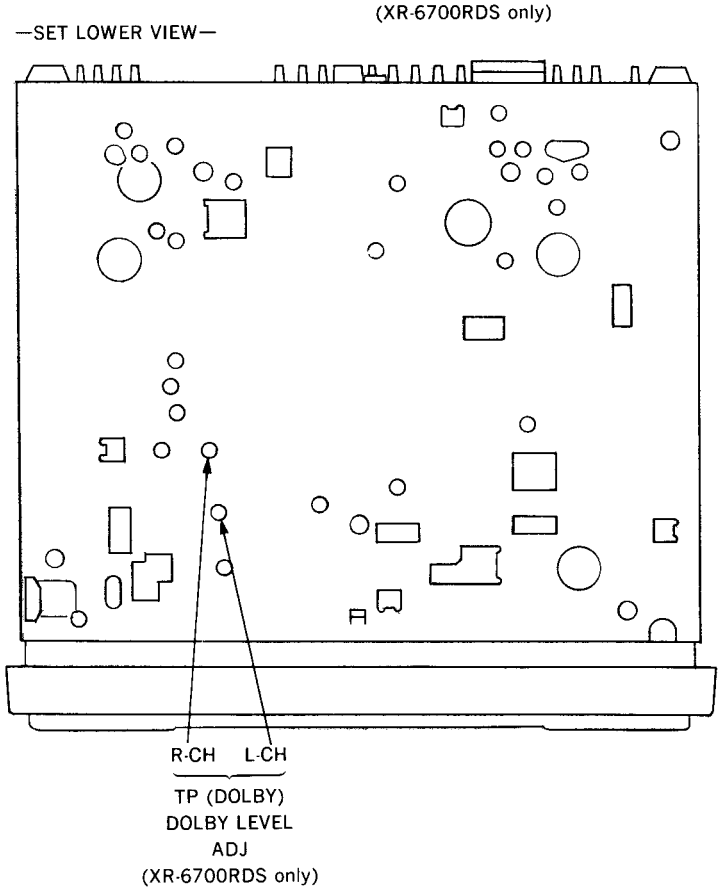

SECTION 6
DIAGRAMS

6-1. IC PIN DESCRIPTION

• IC501 MN1884820S3N (System Control)

Pin No.	Pin Name	I/O	Pin Description
1	TUNMUT	O	TUNER MUTE output terminal
2	AMPON	O	Power amplifier power control output terminal
3	ILLON	O	Illumination power control output terminal
4	PW ON	O	System power control output terminal
5	$\overline{\text{AMPMUT}}$	O	Power amplifier mute control output terminal
6	RCIN1	I	Rotary Commander Shift input terminal
7	VDD	—	Power terminal
8	X IN	I	Connection oscillator 8MHz cera-lock
9	X OUT	O	Connection oscillator 8MHz cera-lock
10	GND	—	GND
11	XT IN	I	32kHz crystal connection
12	XT OUT	O	32kHz crystal connection
13	EX2	—	Connect to GND.
14	$\overline{\text{RESET}}$	—	Reset input terminal. "L" for Reset.
15	RDSCKI	I	RDS-CLK input terminal
16	BU IN	I	BACK-UP detection input terminal
17	KEYACK	I	Key input acknowledge terminal
18	VOLSO	O	Electric volume serial data output terminal
19	VOLCKO	O	Electric volume serial clock output terminal
20	VOLCE	O	Electric volume serial chip enable output terminal
21	TAPEMUT	O	AUDIO signal select control output terminal
22	LMLOD	O	LOADING MOTOR control output terminal (LOADING direction)
23	LMEJ	O	LOADING MOTOR control output terminal (EJECT direction)
24	$\overline{\text{AMSON}}$	O	AMS control output terminal
25	$\overline{\text{N}}$ ROUT	O	FORWARD/REVERSE detection output terminal
26	$\overline{\text{AMSIN}}$	I	Music with/without detection input terminal at AMS.
27	PLLSO	O	PLL DATA output terminal
28	PLLCKO	O	PLL CLK output terminal
29	PLLCE	O	PLL CE output terminal
30	RDSSI	I	RDS-DATA input terminal
31	$\overline{\text{AD ON}}$	O	AD port power control output terminal
32	DOLON	I/O	DOLBY control input/output terminal
33	MTLON	I/O	METAL control input/output terminal
34	CMON	O	TAPE capstan motor control signal output terminal
35	TAPON	O	TAPE power control output terminal
36	$\overline{\text{ACCON}}$	I	ACC power detection input terminal
37	PLLSI	I	PLL DATA input terminal
38	BEEP	O	Control output terminal for BEEP sound.
39	LCDCKO	O	LCD serial clock output terminal
40	LCDSO	O	LCD serial data output terminal
41	LCDINH	O	LCD blank display control output terminal
42	LCDCE	O	LCD chip enable output terminal
43	UNICKO	—	Not used.
44	UNICI	—	Not used.
45	UNISI	—	Not used.
46	UNISO	—	Not used.

Pin No.	Pin Name	I/O	Pin Description
47	VDD	—	Power terminal
48	AVDD	—	Power terminal of AD input port. Connect to pin ㊼.
49	AVREF+	—	Reference voltage input of AD input port. (+ side)
50, 51	KEYIN1, KEYIN0	I	KEY input terminal
52	KEYSEL1	I	KEY function select input terminal. "L" for XR-6600RDS, "H" for XR-6700RDS.
53	KEYSEL0	I	Connect to GND.
54, 55	DSTSEL1, DSTSEL0	I	Connect to GND.
56	RCIN0	I	Rotary Commander Shift input terminal
57	VSM	I	Signal meter AD input port terminal of FM/AM common.
58	AVREF−	—	Reference voltage input of AD input port. (− side)
59	AVSS	—	GND. Connect to pin ㊽.
60	GND	—	GND
61	BUSON	—	Not used.
62	$\overline{\text{SYSRST}}$	—	Not used.
63	$\overline{\text{SEKOUT}}$	O	SEEK OUT output terminal
64	TUNON	O	TUNER power control output terminal
65	FM ON	O	FM power control output terminal
66	MUT	O	System MUTE output terminal
67	AF SEK	O	Output terminal for AF-SEEK.
68	COLOR	O	Illumination color select control output terminal
69	NOSESW	I	Input pin for detecting mounting of front panel.
70	ST	I	ST indicate to turn ON for "L".
		O	At forced monaural, output for "L".
71	SD IN	I	STOP decide on SEEK, AUTO-MEMORY and SCAN.
72	REL S	I	Reverse direction rotation detection input terminal of reel table.
73	PW SEL	I	Power select switching input terminal
74	REL T	I	Forward direction rotation detection input terminal of reel table.
75—78	POS4—POS1	I	Position signal detection input terminal
79	$\overline{\text{TEST}}$	I	Test mode input terminal
80	ILLIN	I	Connect to GND.

6-2. PRINTED WIRING BOARDS—MAIN SECTION—

• **Semiconductor Location**

Ref. No.	Location	Ref. No.	Location
D2	D-3	IC2	E-4
D3	C-5	IC3	H-5
D350	F-5	IC151	E-7
D361	H-10	IC152	E-5
D362	F-11	IC351	G-4
D501	E-5	IC360	G-10
D504	H-6	IC501	H-8
D505	H-6	IC571	E-10
D506	I-6	IC601	E-11
D601	E-8	IC801	D-15
D605	B-7		
D606	B-8	Q2	C-5
D607	B-8	Q3	D-3
D609	I-2	Q4	C-4
D610	I-2	Q101	F-4
D611	I-4	Q201	F-4
D612	I-4	Q361	I-11
D613	I-3	Q362	I-11
D614	I-3	Q364	F-11
D615	I-9	Q365	F-10
D616	I-3	Q501	F-5
D617	B-3	Q503	H-3
D618	I-2	Q603	F-8
D619	I-4	Q605	E-8
D620	B-10	Q606	G-6
D621	B-11	Q607	E-8
D622	B-3	Q608	G-6
D624	E-10	Q609	B-6
D650	B-10	Q610	B-7
D651	B-11	Q611	E-10
D652	B-11	Q612	E-10
D653	B-11	Q701	H-10
D701	I-11	Q702	I-11
D702	I-11	Q801	E-18
D821	F-16	Q802	D-18
D823	E-17	Q821	E-17
D824	E-19	Q822	D-19
		Q851	E-16
IC1	C-3		

Note :

• ○— : parts extracted from the component side.

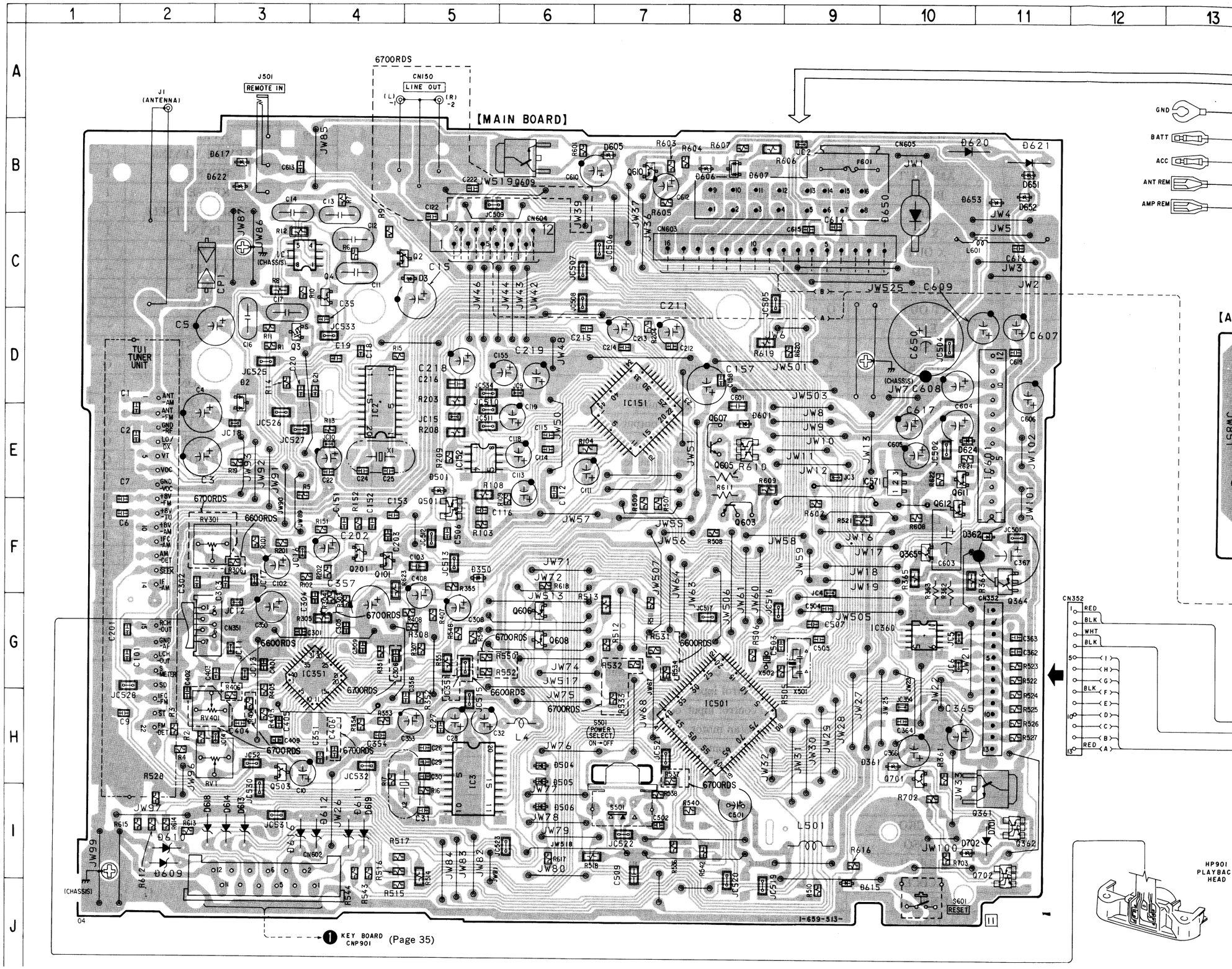

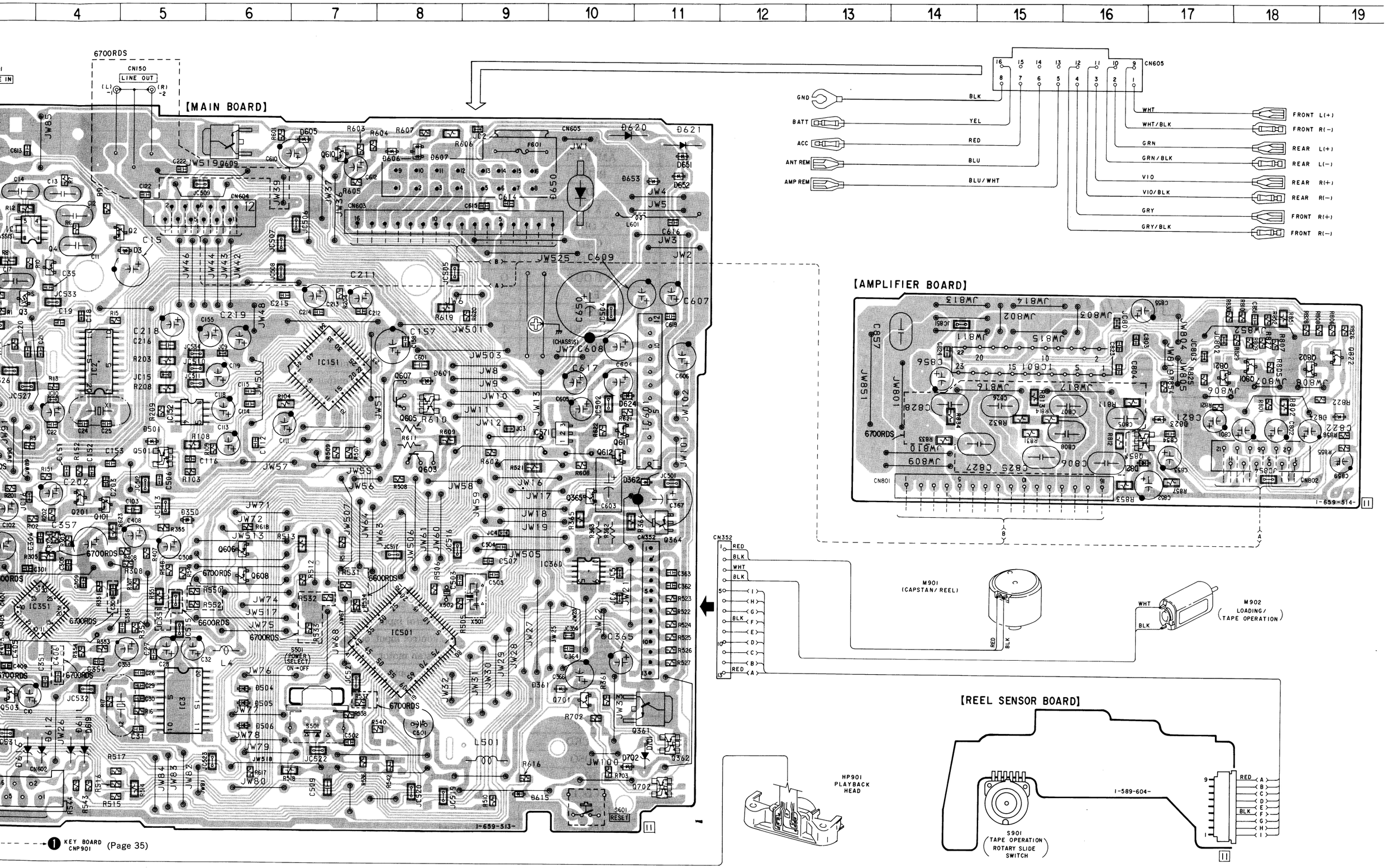
[MAIN BOARD]
[AMPLIFIER BOARD]
[REEL SENSOR BOARD]
CN605
GND
BATT
ACC
ANT REM
AMP REM
BLK
YEL
RED
BLU
BLU/WHT
WHT
WHT/BLK
GRN
GRN/BLK
VIO
VIO/BLK
GRY
GRY/BLK
FRONT L(+)
FRONT R(−)
REAR L(+)
REAR L(−)
REAR R(+)
REAR R(−)
FRONT R(+)
FRONT R(−)
CN352
M901
(CAPSTAN/ REEL)
M902
LOADING/
TAPE OPERATION
HP901
PLAYBACK
HEAD
S901
TAPE OPERATION
ROTARY SLIDE
SWITCH
1-589-604-
1-659-513-
1-659-514-
KEY BOARD
CNP901
(Page 35)

6-3. SCHEMATIC DIAGRAM—MAIN SECTION— • Refer to page 37 for IC Block Diagrams.

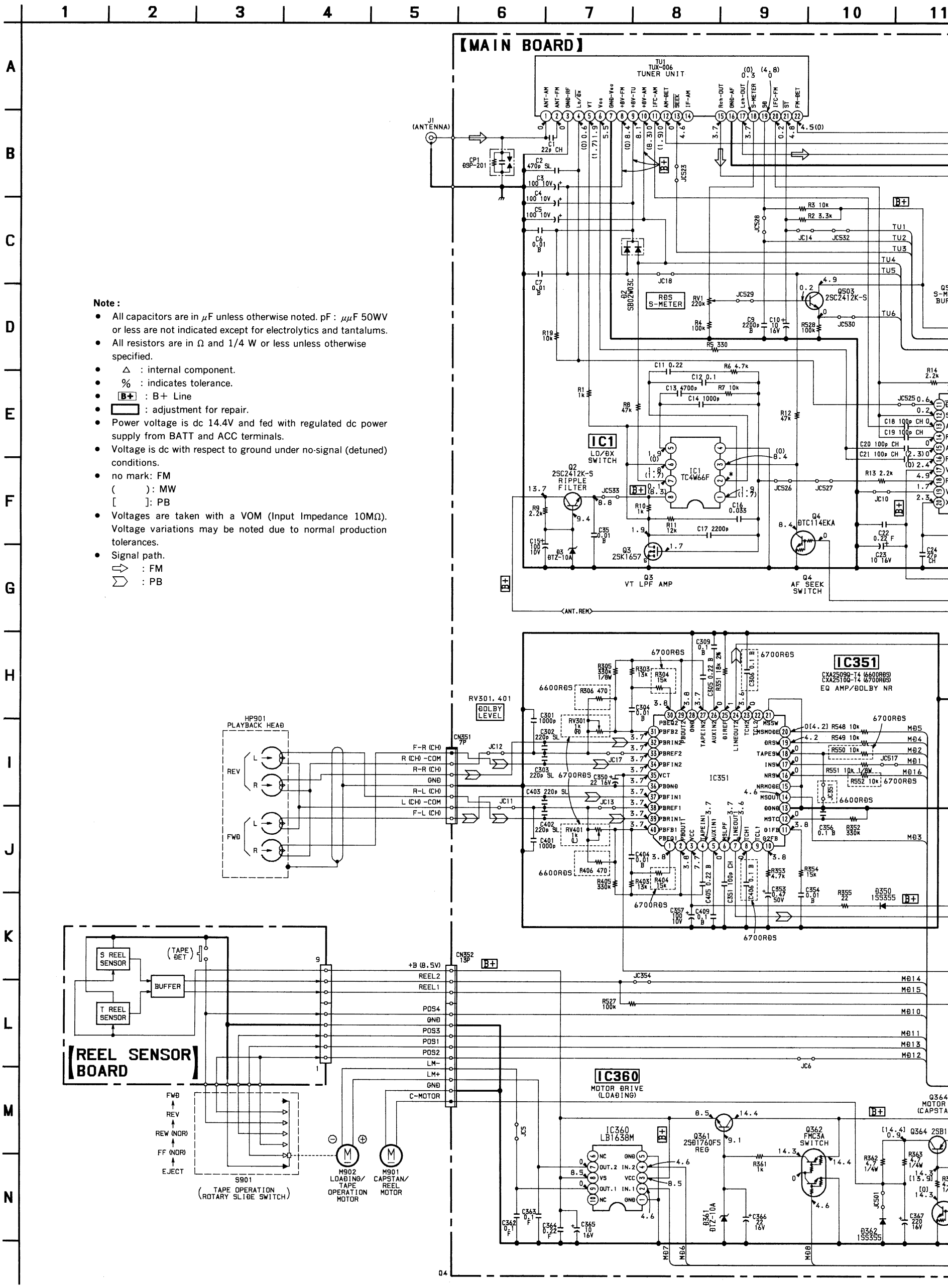

Note :

- All capacitors are in μF unless otherwise noted. pF : $\mu\mu$F 50WV or less are not indicated except for electrolytics and tantalums.
- All resistors are in Ω and 1/4 W or less unless otherwise specified.
- △ : internal component.
- % : indicates tolerance.
- B+ : B+ Line
- ▭ : adjustment for repair.
- Power voltage is dc 14.4V and fed with regulated dc power supply from BATT and ACC terminals.
- Voltage is dc with respect to ground under no-signal (detuned) conditions.
- no mark: FM
  ( ): MW
  [ ]: PB
- Voltages are taken with a VOM (Input Impedance 10MΩ). Voltage variations may be noted due to normal production tolerances.
- Signal path.
  ⇨ : FM
  ⇨ : PB

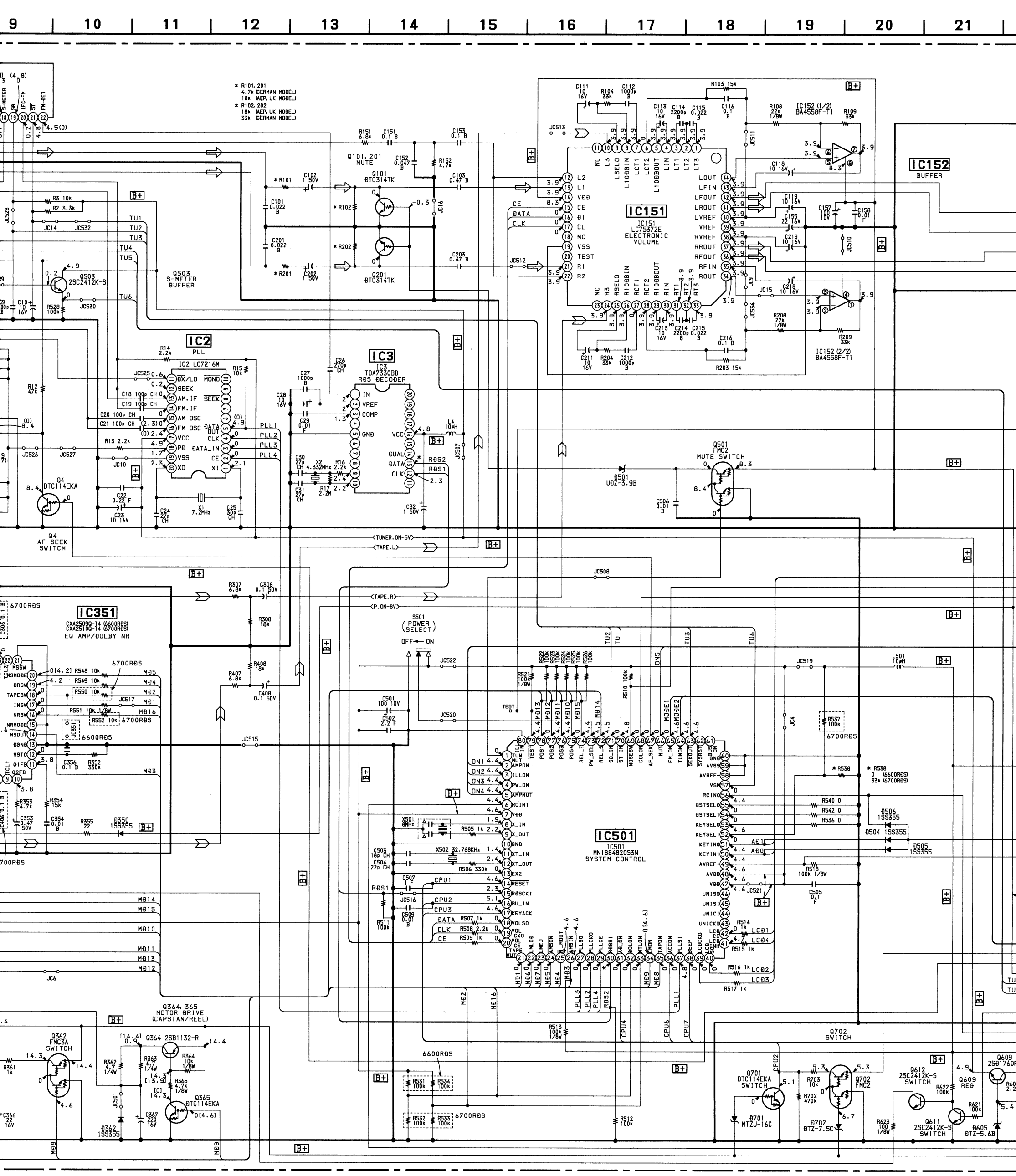
IC151
IC151
LC75372E
ELECTRONIC
VOLUME
IC152
BUFFER
IC152 (1/2)
BA4558F-T1
IC152 (2/2)
BA4558F-T1
IC2
PLL
IC2 LC7216M
IC3
IC3
TDA7330DD
RDS DECODER
IC351
CXA2509Q-T4 (6600RDS)
CXA2510Q-T4 (6700RDS)
EQ AMP/DOLBY NR
IC501
IC501
MN1884820S3N
SYSTEM CONTROL
Q501
FMC2
MUTE SWITCH
Q4
DTC114EKA
Q4
AF SEEK
SWITCH
Q503
S-METER
BUFFER
Q364, 365
MOTOR DRIVE
(CAPSTAN/REEL)
Q702
SWITCH
S501
(POWER
SELECT)
OFF ON
* R101, 201
4.7k (GERMAN MODEL)
10k (AEP, UK MODEL)
* R102, 202
18k (AEP, UK MODEL)
33k (GERMAN MODEL)
Q101, 201
MUTE
Q101
DTC314TK
Q201
DTC314TK
Q501
FMC2
MUTE SWITCH
Q702
FMC2
Q701
DTC114EKA
SWITCH
Q702
SWITCH
Q612
2SC2412K-S
SWITCH
Q611
2SC2412K-S
SWITCH
Q609
REG
Q609
2SD1760
Q362
FMC3A
SWITCH
Q364 2SB1132-R
Q365
DTC114EKA
Q701
MTZJ-16C
Q702
FMC2
Q702
DTZ-7.5C
Q611
2SC2412K-S
SWITCH
D605
DTZ-5.6B
D501
DDZ-3.9B
D506
1SS355
D504 1SS355
D505
1SS355
D350
1SS355
D362
1SS355
6600RDS
6700RDS
B+
TUNER.ON-5V
TAPE.L
TAPE.R
P.ON-8V

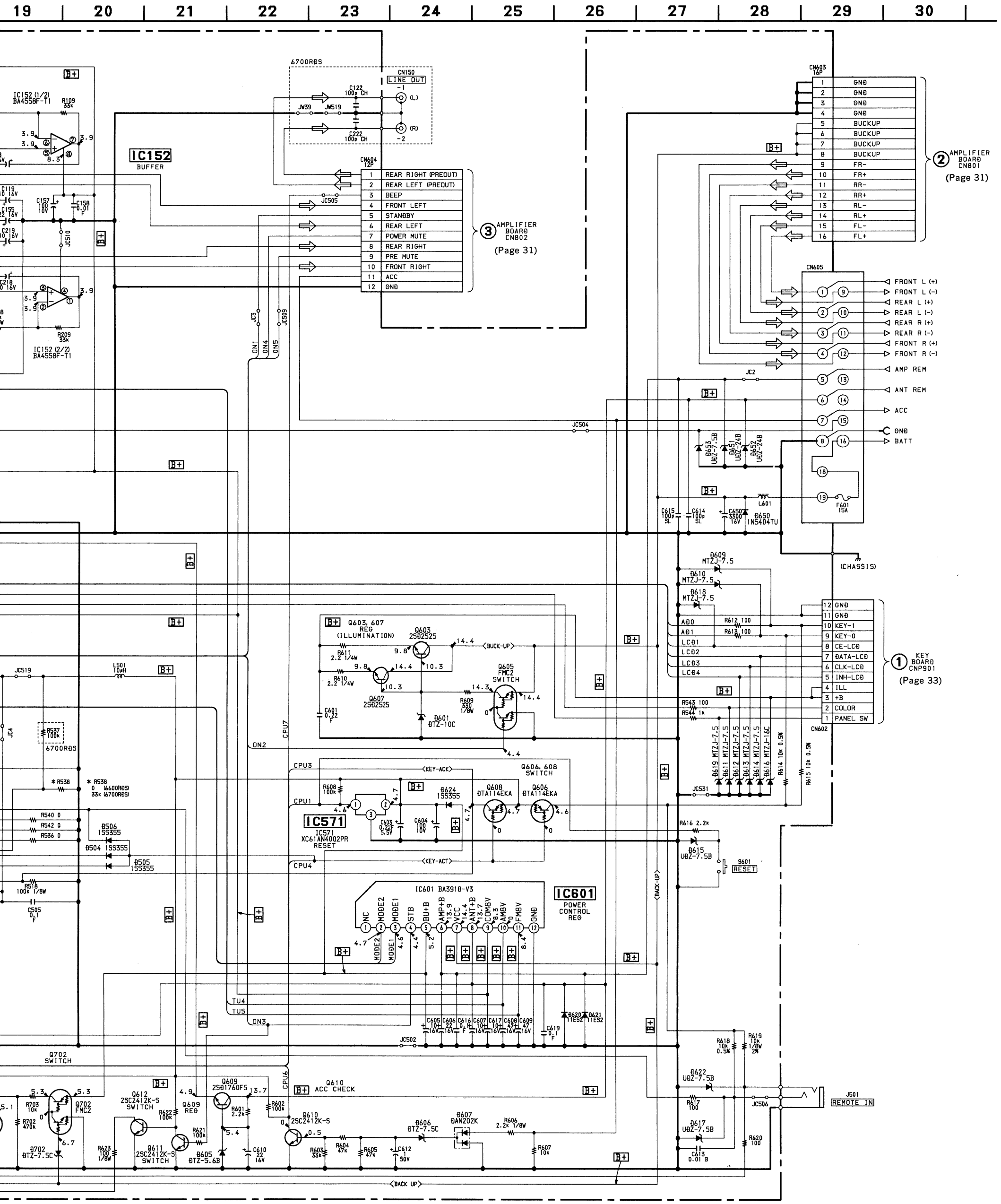
19
20
21
22
23
24
25
26
27
28
29
30
IC152
BUFFER
IC152 (1/2)
BA4558F-T1
IC152 (2/2)
BA4558F-T1
6700RDS
CN150
LINE OUT
CN604
12P
1 REAR RIGHT (PREOUT)
2 REAR LEFT (PREOUT)
3 BEEP
4 FRONT LEFT
5 STANDBY
6 REAR LEFT
7 POWER MUTE
8 REAR RIGHT
9 PRE MUTE
10 FRONT RIGHT
11 ACC
12 GND
③ AMPLIFIER BOARD CN802
(Page 31)
CN603
16P
1 GND
2 GND
3 GND
4 GND
5 BUCKUP
6 BUCKUP
7 BUCKUP
8 BUCKUP
9 FR-
10 FR+
11 RR-
12 RR+
13 RL-
14 RL+
15 FL-
16 FL+
② AMPLIFIER BOARD CN801
(Page 31)
CN605
FRONT L (+)
FRONT L (-)
REAR L (+)
REAR L (-)
REAR R (+)
REAR R (-)
FRONT R (+)
FRONT R (-)
AMP REM
ANT REM
ACC
GND
BATT
(CHASSIS)
Q603, 607
REG
(ILLUMINATION)
Q603
2SD2525
Q607
2SD2525
Q605
FMC2
SWITCH
D601
DTZ-10C
Q606, 608
SWITCH
Q608
DTA114EKA
Q606
DTA114EKA
IC571
IC571
XC61AN4002PR
RESET
IC601 BA3918-V3
IC601
POWER
CONTROL
REG
NC
MODE2
MODE1
STB
BU+B
AMP+B
VCC
ANT+B
COM8V
AM8V
FM8V
GND
Q702
SWITCH
Q702
FMC2
Q612
2SC2412K-S
SWITCH
Q609
REG
Q609
2SD1760F5
Q610
ACC CHECK
Q610
2SC2412K-S
Q611
2SC2412K-S
SWITCH
D605
DTZ-5.6B
D606
DTZ-7.5C
D607
DAN202K
D702
DTZ-7.5C
D609
MTZJ-7.5
D610
MTZJ-7.5
D618
MTZJ-7.5
CN602
12 GND
11 GND
10 KEY-1
9 KEY-0
8 CE-LCD
7 DATA-LCD
6 CLK-LCD
5 INH-LCD
4 ILL
3 +B
2 COLOR
1 PANEL SW
① KEY BOARD CNP901
(Page 33)
S601
RESET
J501
REMOTE IN
F601
15A
D650
1N5404TU
L601
D615
UDZ-7.5B
D622
UDZ-7.5B
D617
UDZ-7.5B
D619 MTZJ-7.5
D611 MTZJ-7.5
D612 MTZJ-7.5
D613 MTZJ-7.5
D614 MTZJ-7.5
D616 MTZJ-16C
D653
UDZ-7.5B
D651
UDZ-24B
D652
UDZ-24B
D620
11ES2
D621
11ES2
JC504
JC502
JC506
JC531
JC2
JC3
JC509
JC519
JC510
JC4
ON1
ON2
ON3
ON4
ON5
CPU1
CPU3
CPU4
CPU5
CPU6
CPU7
TU4
TU5
KEY-ACK
KEY-ACT
BACK-UP
BACK UP

6-4. SCHEMATIC DIAGRAM—AMPLIFIER SECTION—

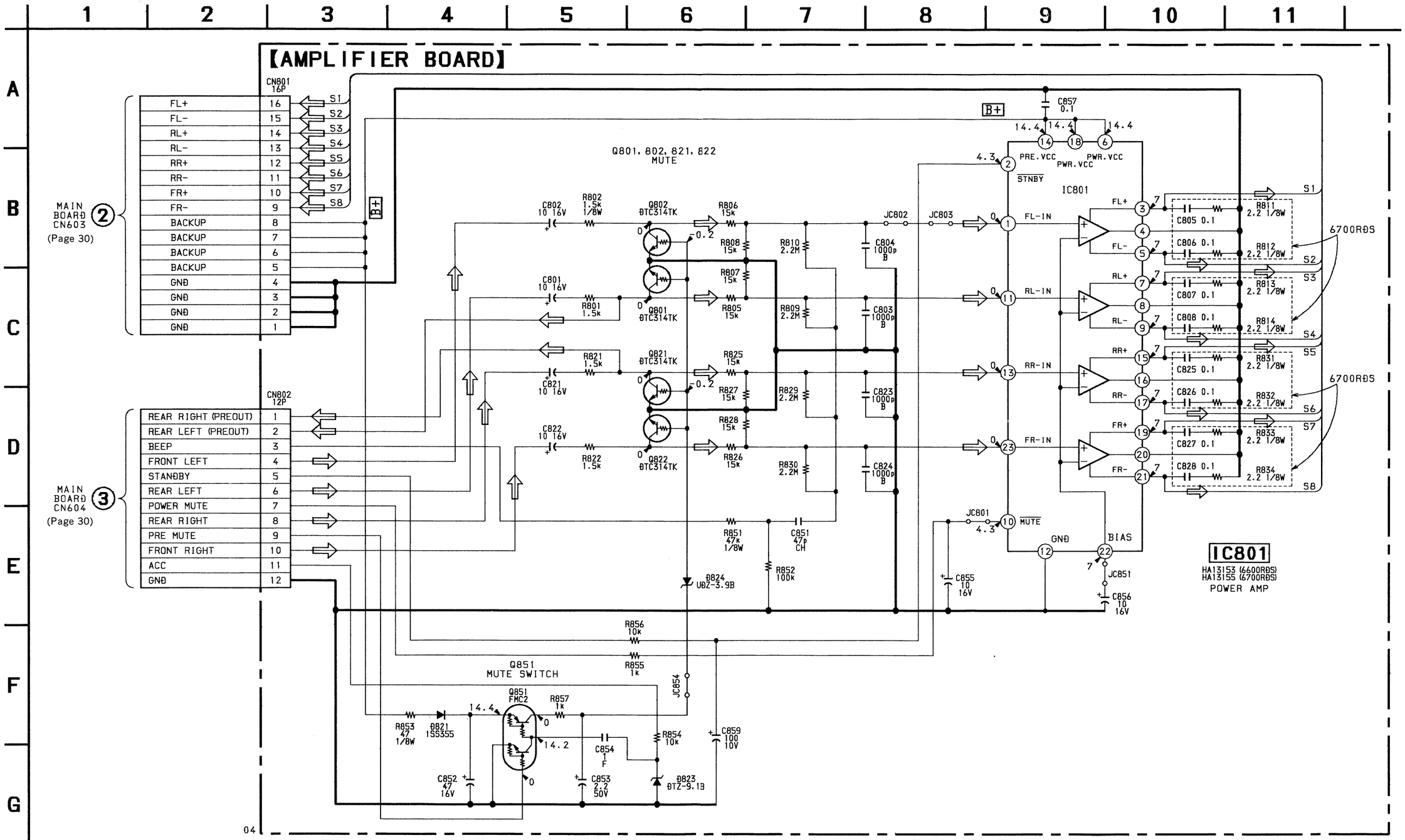

Note :

- All capacitors are in μF unless otherwise noted. pF : μμF 50WV or less are not indicated except for electrolytics and tantalums.
- All resistors are in Ω and 1/4 W or less unless otherwise specified.
- B+ : B+ Line
- Power voltage is dc 14.4V and fed with regulated dc power supply from BATT and ACC terminals.
- Voltage is dc with respect to ground under no-signal (detuned) conditions.
- no mark: FM
- Voltages are taken with a VOM (Input Impedance 10MΩ). Voltage variations may be noted due to normal production tolerances.
- Signal path.
  ⇨ : FM

6-5. SCHEMATIC DIAGRAM—PANEL SECTION—

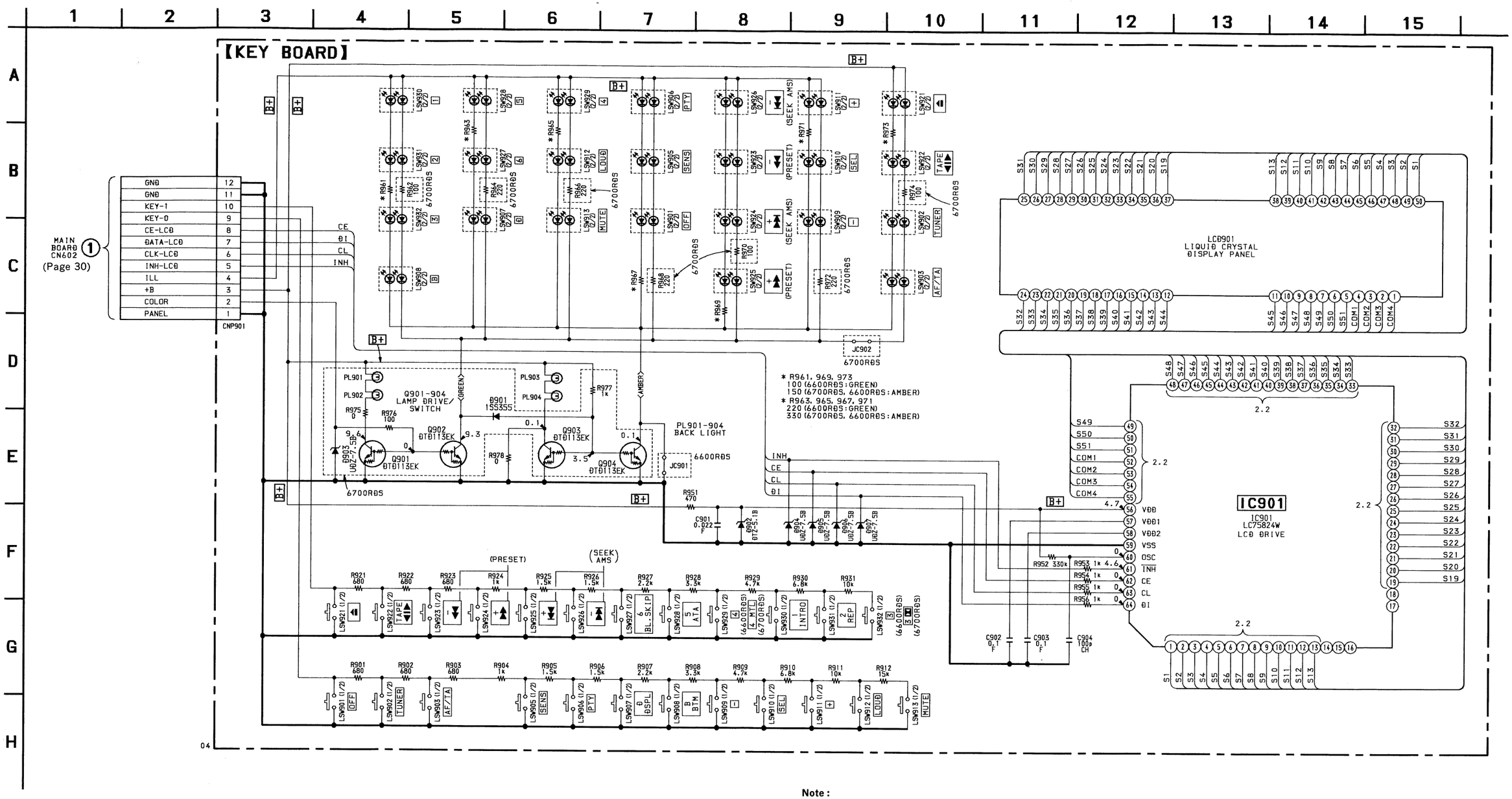

Note :

- All capacitors are in μF unless otherwise noted. pF : $\mu\mu$F 50WV or less are not indicated except for electrolytics and tantalums.
- All resistors are in Ω and 1/4 W or less unless otherwise specified.
- B+ : B+ Line
- Power voltage is dc 14.4V and fed with regulated dc power supply from BATT and ACC terminals.
- Voltage is dc with respect to ground under no-signal (detuned) conditions.
- no mark: FM
- Voltages are taken with a VOM (Input Impedance 10MΩ). Voltage variations may be noted due to normal production tolerances.

6-6. PRINTED WIRING BOARD—PANEL SECTION—

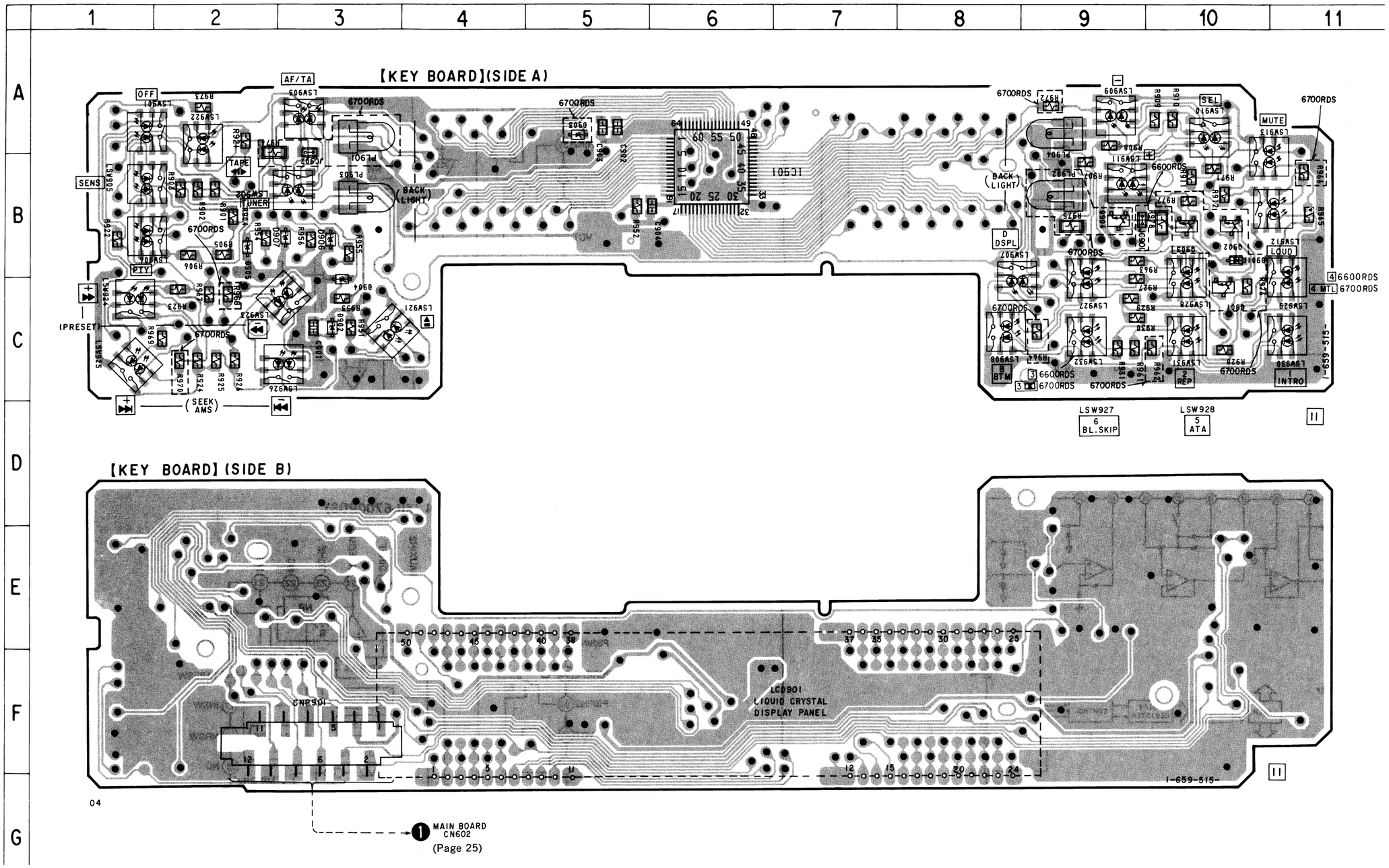

● Semiconductor Location

Ref. No.	Location
(D901)	B-10
D902	C-3
(D903)	A-5
D904	B-3
D905	B-2
D906	B-3
D907	B-3
IC901	B-6
(Q901)	C-10
(Q902)	B-10
(Q903)	B-10
(Q904)	B-9

( ): XR-6700RDS only

Note:

- ○— : parts extracted from the component side.
- ● : Through hole.
- ▒ : Pattern on the side which is seen.
  (The other layer's patterns are not indicated.)

• **IC Block Diagrams**

IC1 TC4W66F

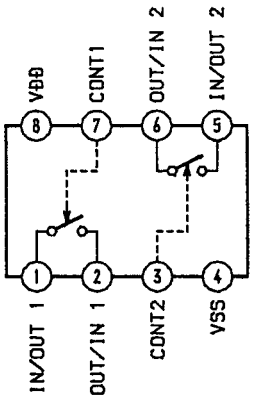

IC2 LC7216M

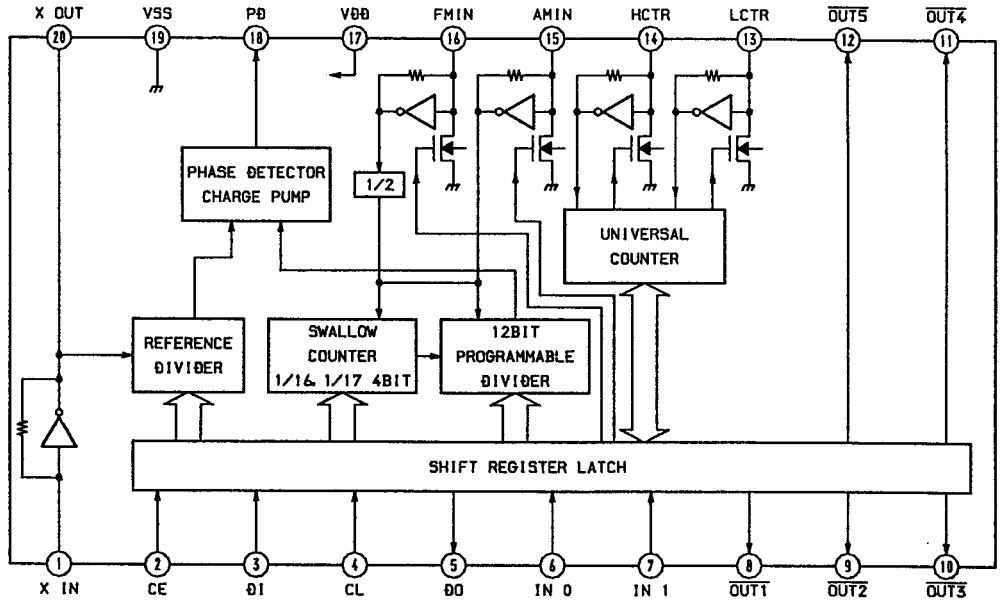

IC151 LC75372E

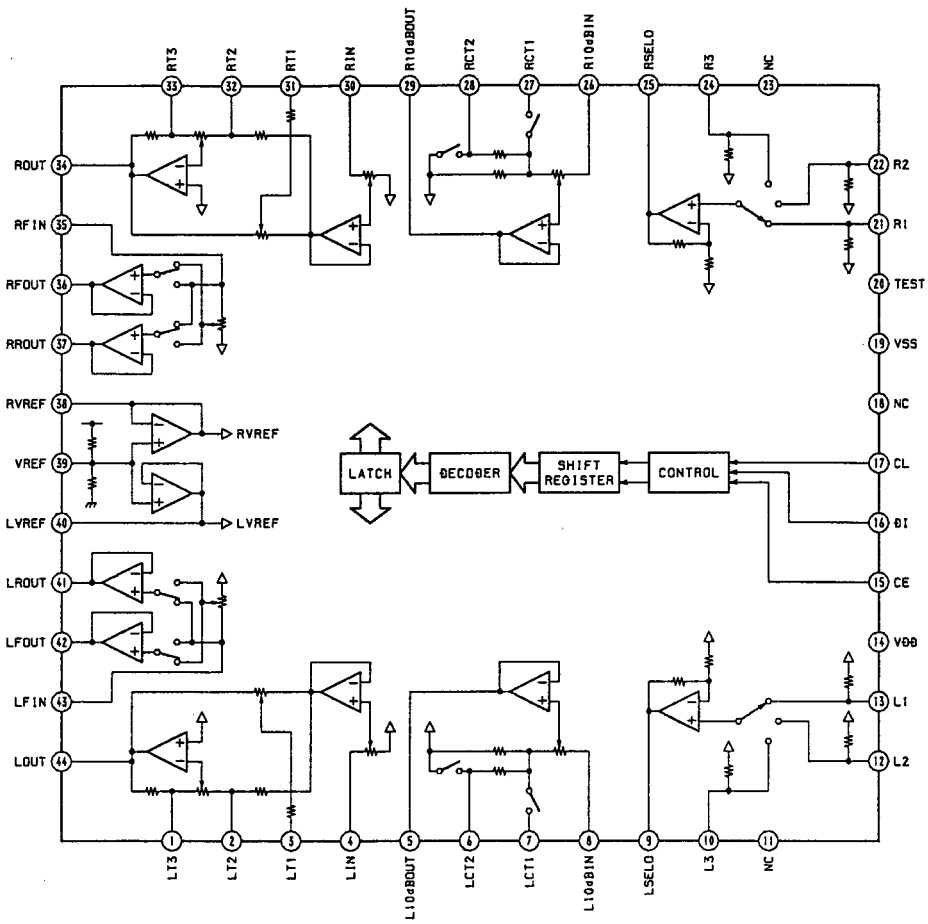

IC351 CXA2509Q-T4 (XR-6600RDS)

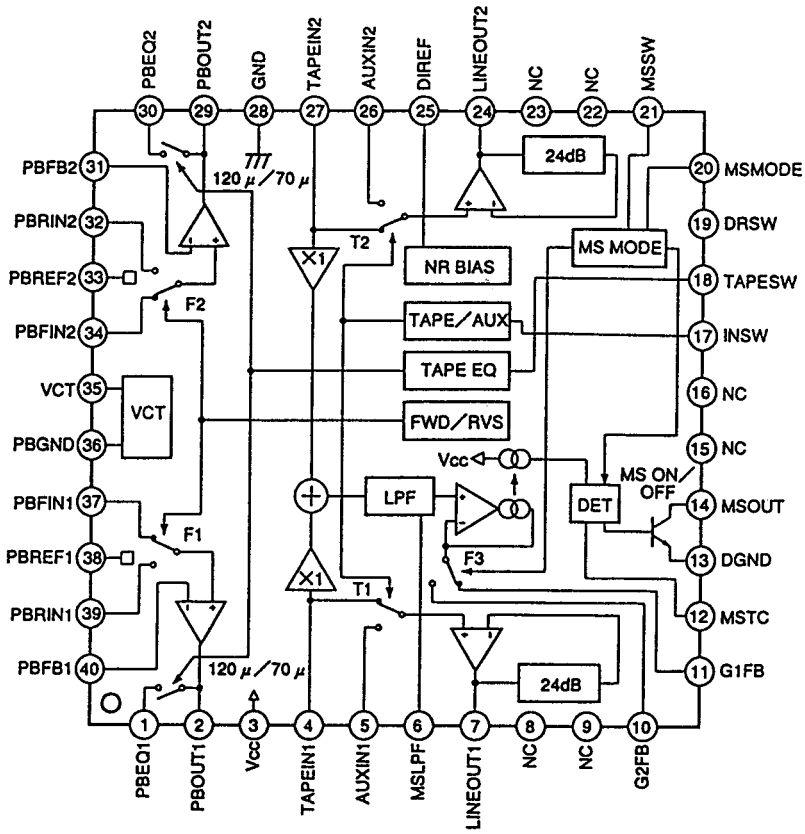

IC351 CXA2510Q-T4 (XR-6700RDS)

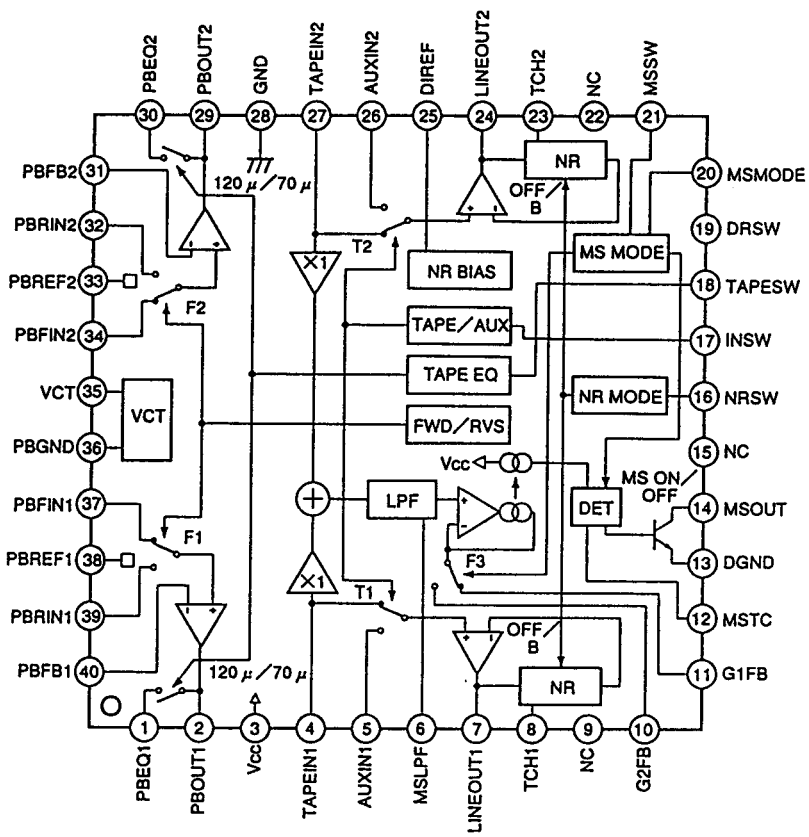

IC360 LB1638M

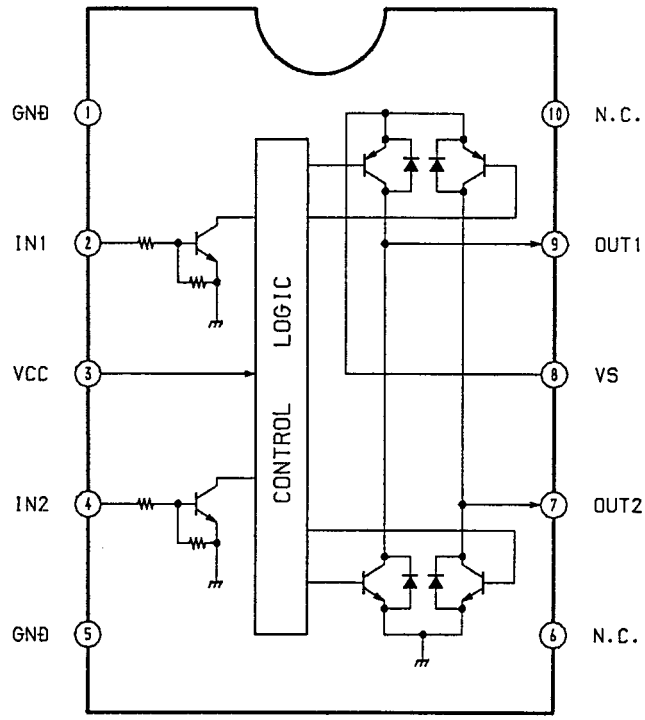

IC601 BA3918-V3

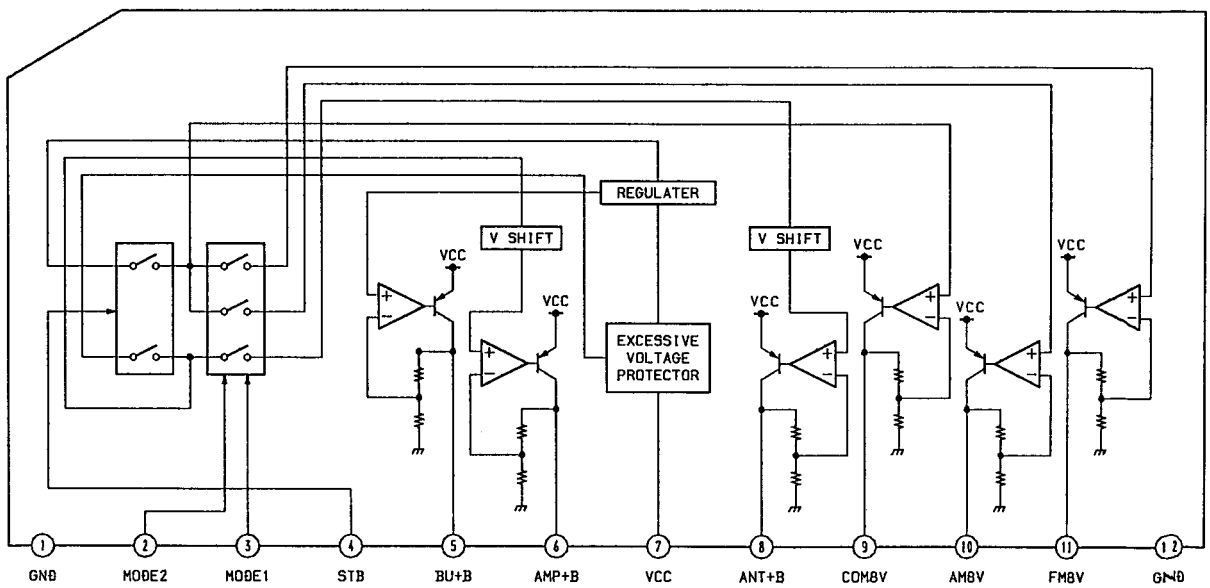

SECTION 7
EXPLODED VIEWS

NOTE:
- The mechanical parts with no reference number in the exploded views are not supplied.
- Items marked "*" are not stocked since they are seldom required for routine service. Some delay should be anticipated when ordering these items.
- -XX and -X mean standardized parts, so they may have some difference from the original one.
- Color Indication of Appearance Parts
  Example :
  KNOB, BALANCE (WHITE)... (RED)
  ↑ Parts Color ↑ Cabinet's Color
- Hardware (# mark) list and accessories and packing materials are given in the last of this parts list.
- Abbreviation
  G : German model

7-1. CHASSIS SECTION

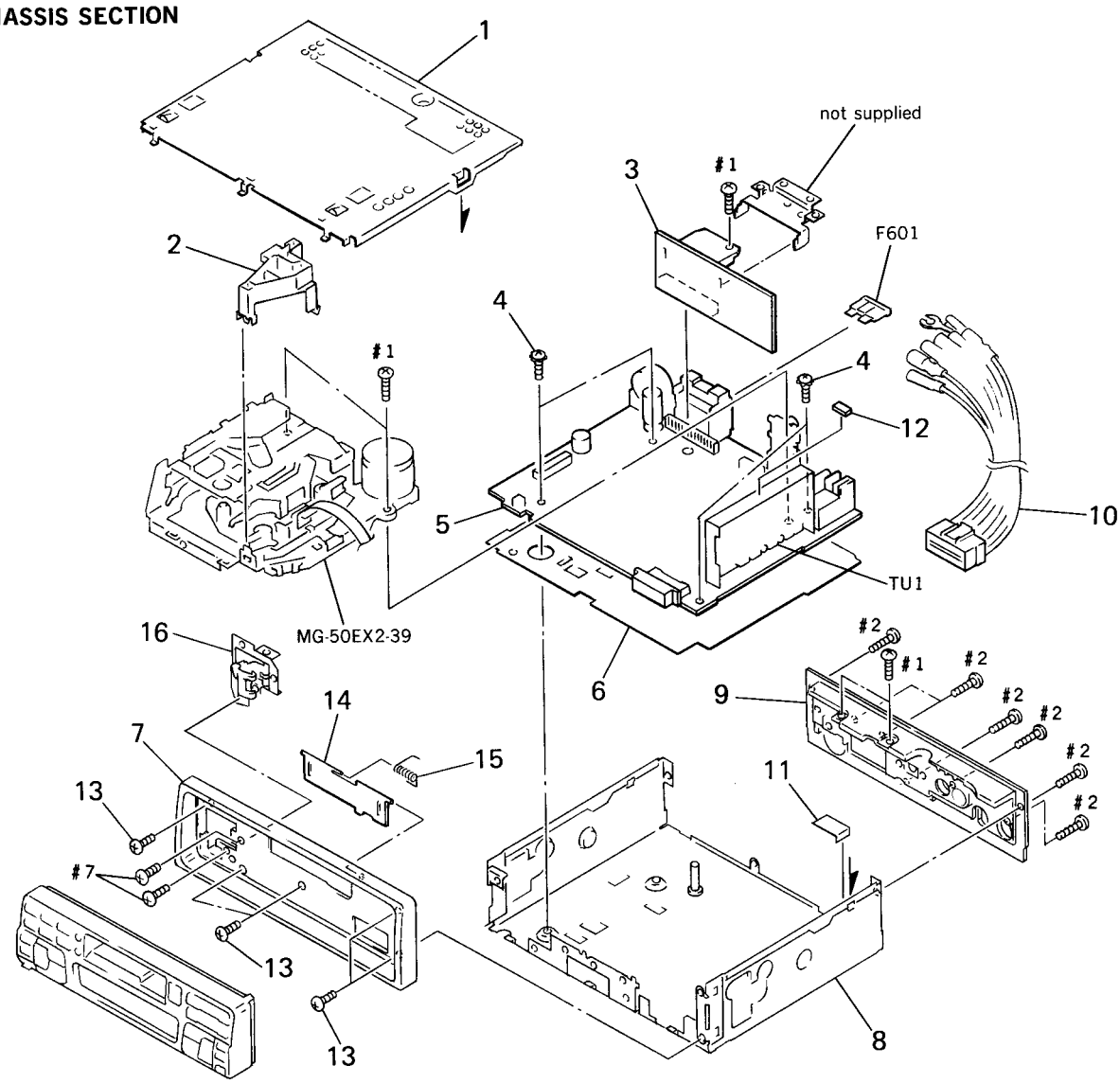

Ref. No.	Part No.	Description	Remark
* 1	X-3369-736-1	COVER ASSY	
2	3-927-799-01	GUIDE (CASSETTE)	
* 3	A-3309-056-A	AMPLIFIER BOARD, COMPLETE (6600RDS)	
* 3	A-3309-090-A	AMPLIFIER BOARD, COMPLETE (6700RDS)	
4	3-915-923-01	SCREW, GROUND POINT	
* 5	A-3309-081-A	MAIN BOARD, COMPLETE (6600RDS:G)	
* 5	A-3309-082-A	MAIN BOARD, COMPLETE (6600RDS:AEP,UK)	
* 5	A-3309-088-A	MAIN BOARD, COMPLETE (6700RDS:AEP,UK)	
* 5	A-3309-089-A	MAIN BOARD, COMPLETE (6700RDS:G)	
* 6	3-931-201-01	SHEET, INSULATING	
7	3-921-650-05	PANEL, SUB	
* 8	X-3371-519-1	CHASSIS ASSY	
* 9	3-931-219-11	HEAT SINK (6700RDS)	
* 9	3-931-219-31	HEAT SINK (6600RDS)	
10	1-776-527-31	CORD (WITH CONNECTOR) (ISO)	
* 11	3-925-065-01	SHEET (CU)	
12	9-911-840-XX	CUSHION (U)	
13	3-907-995-01	SCREW (2.6X8) (BZN), +PTT	
14	3-922-165-53	DOOR, CASSETTE (6700RDS)	
14	3-922-165-83	DOOR, CASSETTE (6600RDS)	
15	3-913-076-01	SPRING (C DOOR), TORSION	
16	X-3367-636-1	LOCK ASSY	
F601	1-533-331-11	FUSE (BLADE TYPE) (AUTO FUSE) (15A)	
TU1	A-3282-012-A	TUNER UNIT (TUX-006)	

7-3. MECHANISM DECK SECTION (MG-50EX2-39)

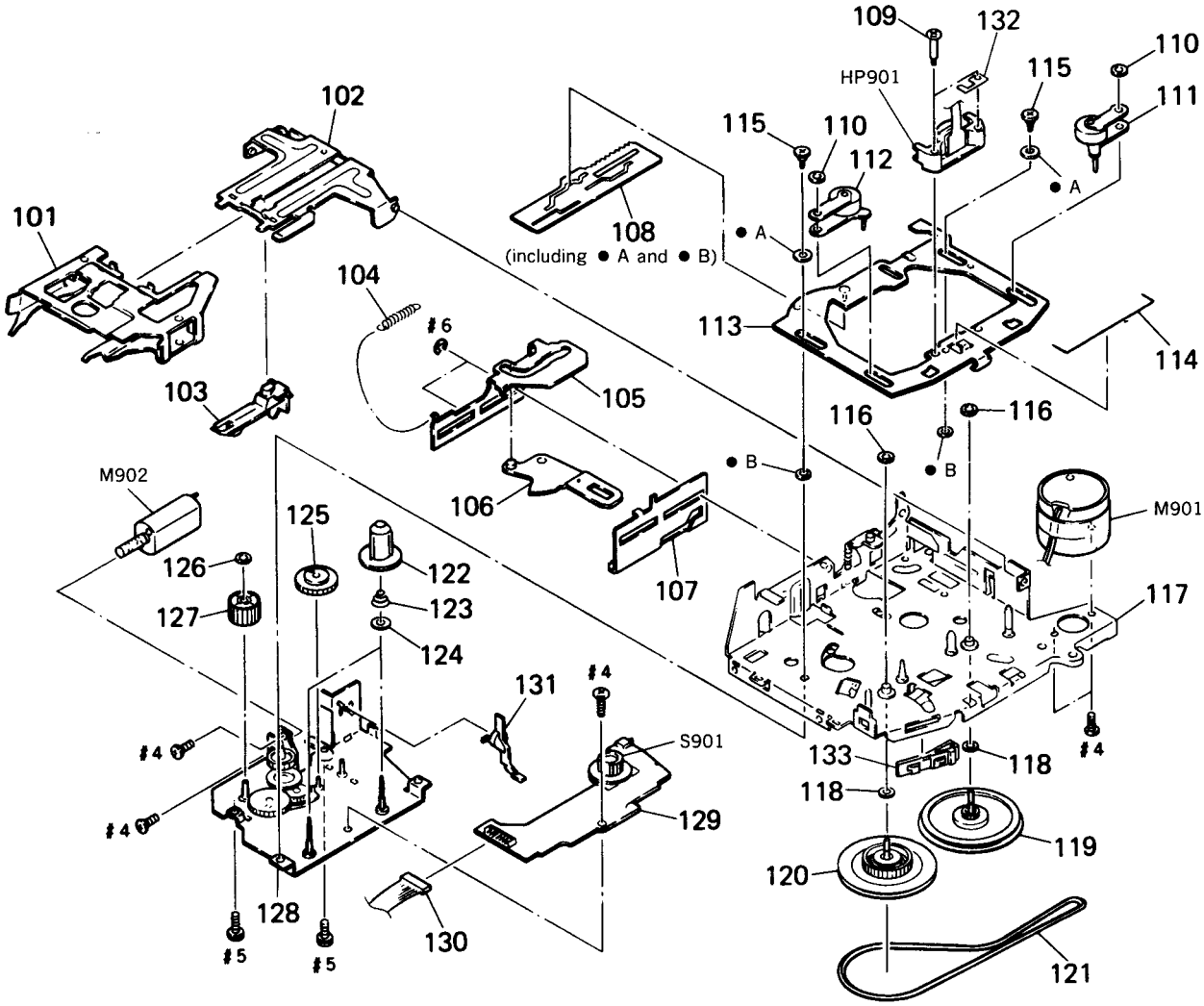

Ref. No.	Part No.	Description	Remark
101	3-928-222-01	HOUSING (2), CASSETTE	
102	3-912-882-01	HANGER (2), HOUSING	
103	3-912-884-01	CATCHER	
104	3-912-885-01	SPRING (LOADING LEVER), TENSION	
* 105	3-912-892-01	LEVER (B), LOADING	
* 106	3-912-883-01	ARM, SUCTION	
107	3-922-941-01	LEVER (LOADING A)	
* 108	X-3370-516-1	LEVER (SV) ASSY, MODE	
109	3-927-100-11	SCREW (+PS 2X10), SPECIAL	
110	3-579-788-01	WASHER, STOPPER	
111	X-3368-266-1	PINCH LEVER (F) ASSY	
112	X-3368-267-1	PINCH LEVER (R) ASSY	
113	X-3370-824-1	BASE ASSY (HD2), HEAD	
114	3-912-879-01	SPRING, PINCH PRESS	
115	3-931-184-01	SCREW (HB2), STEP	
116	3-364-151-01	WASHER	
117	X-3368-841-1	CHASSIS (SV) ASSY (A), MECHANICAL	
118	3-701-437-21	WASHER	
119	3-930-932-01	FLYWHEEL (F) (SEF)	

Ref. No.	Part No.	Description	Remark
120	X-3371-303-1	CLUTCH (SEF) ASSY, FR	
121	3-912-896-01	BELT	
122	X-3368-843-1	GEAR ASSY, REEL	
123	3-917-222-01	SPRING (B-T), COIL	
124	3-917-324-01	WASHER (B-T)	
125	3-912-888-03	GEAR (LOADING E)	
126	3-321-813-01	WASHER, COTTER POLYETHYLENE	
127	3-912-889-01	GEAR (LOADING F)	
128	X-3368-842-1	BRACKET (SV) ASSY, REEL	
129	1-589-604-11	REEL SENSOR BOARD	
130	1-765-460-12	CORD (WITH CONNECTOR)	
131	3-916-358-01	LEVER (TAPE IN 2)	
* 132	3-917-258-01	PLATE, GROUND	
133	3-919-553-01	GUIDE (BELT)	
HP901	1-500-196-21	HEAD, MAGNETIC (PLAYBACK)	
M901	X-3368-684-1	MOTOR ASSY, MAIN (CAPSTAN/REEL)	
M902	X-3368-685-1	MOTOR ASSY, SUB (LOADING/TAPE OPERATION)	
S901	1-692-885-11	SWITCH, ROTARY SLIDE (TAPE OPERATION)	

7-2. FRONT PANEL SECTION

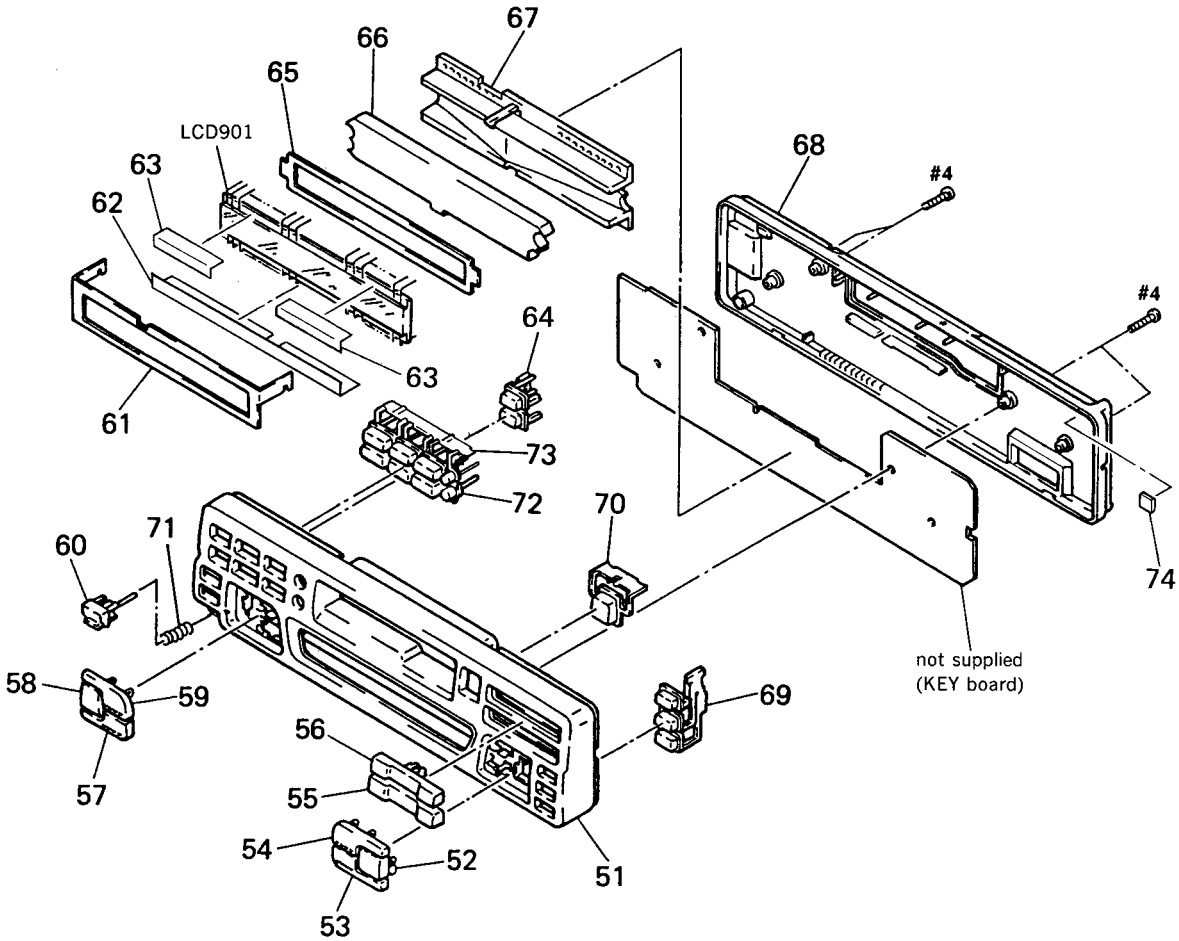

Ref. No.	Part No.	Description	Remark
51	3-921-648-51	PANEL, FRONT (6700RDS)	
51	3-932-828-01	PANEL, FRONT (6600RDS)	
52	3-921-916-11	BUTTON (CD. TAPE)	
53	3-921-909-31	BUTTON (AM)	
54	3-921-915-11	BUTTON (FM)	
55	3-921-652-01	BUTTON (PRESET)	
56	3-921-651-01	BUTTON (SEEK)	
57	3-921-911-01	BUTTON (-)	
58	3-921-902-01	BUTTON (SEL)	
59	3-921-910-01	BUTTON (+)	
60	3-918-693-01	SPRING (RELEASE)	
* 61	3-921-659-01	PLATE (LCD), GROUND	
* 62	3-921-726-02	SHEET (LCD) (L)	
* 63	3-921-727-02	SHEET (LCD) (S)	

Ref. No.	Part No.	Description	Remark
64	3-921-903-01	BUTTON (2 GANG)	
* 65	3-935-363-01	SHEET (REFLECTOR)	
* 66	3-921-656-01	PLATE, LIGHT GUIDE	
* 67	3-921-957-01	HOLDER (LCD)	
68	3-921-649-01	PANEL, FRONT BACK	
69	3-921-898-21	BUTTON (3 GANG)	
70	3-921-653-01	BUTTON (EJECT)	
71	3-930-844-01	BUTTON (RELEASE)	
72	3-921-655-01	BUTTON (4-6) (6700RDS)	
72	3-921-655-21	BUTTON (4-6) (6600RDS)	
73	3-921-654-01	BUTTON (1-3) (6700RDS)	
73	3-921-654-11	BUTTON (1-3) (6600RDS)	
74	9-911-841-XX	CUSHION, CASSETTE LID	
LCD901	1-801-160-11	DISPLAY PANEL, LIQUID CRYSTAL	

SECTION 8
ELECTRICAL PARTS LIST

AMPLIFIER

NOTE:
- Due to standardization, replacements in the parts list may be different from the parts specified in the diagrams or the components used on the set.
- -XX and -X mean standardized parts, so they may have some difference from the original one.
- RESISTORS
  All resistors are in ohms.
  METAL:Metal-film resistor.
  METAL OXIDE: Metal oxide-film resistor.
  F:nonflammable
- Items marked "*" are not stocked since they are seldom required for routine service. Some delay should be anticipated when ordering these items.
- SEMICONDUCTORS
  In each case, u:μ, for example:
  uA..: μA.. uPA..: μPA..
  uPB..: μPB.. uPC..: μPC.. uPD..: μPD..
- CAPACITORS
  uF: μF
- COILS
  uH: μH

When indicating parts by reference number, please include the board.

- Abbreviation
  G : German model

Ref. No.	Part No.	Description			Remark
*	A-3309-056-A	AMPLIFIER BOARD, COMPLETE (6600RDS)			
*	A-3309-090-A	AMPLIFIER BOARD, COMPLETE (6700RDS)			
		**********			
	3-934-043-01	BRACKET (IC)			
	7-621-770-67	SCREW +PTT 2.6X6 (S)			
		< CAPACITOR >			
C801	1-126-157-11	ELECT	10uF	20%	16V
C802	1-126-157-11	ELECT	10uF	20%	16V
C803	1-163-009-11	CERAMIC CHIP	0.001uF	10%	50V
C804	1-163-009-11	CERAMIC CHIP	0.001uF	10%	50V
C805-808					
	1-136-165-00	FILM	0.1uF	5%	50V (6700RDS)
C821	1-126-157-11	ELECT	10uF	20%	16V
C822	1-126-157-11	ELECT	10uF	20%	16V
C823	1-163-009-11	CERAMIC CHIP	0.001uF	10%	50V
C824	1-163-009-11	CERAMIC CHIP	0.001uF	10%	50V
C825-828					
	1-136-165-00	FILM	0.1uF	5%	50V (6700RDS)
C851	1-163-243-11	CERAMIC CHIP	47PF	5%	50V
C852	1-126-967-11	ELECT	47uF	20%	16V
C853	1-124-257-00	ELECT	2.2uF	20%	50V
C854	1-164-346-11	CERAMIC CHIP	1uF		16V
C855	1-126-157-11	ELECT	10uF	20%	16V
C856	1-126-157-11	ELECT	10uF	20%	16V
C857	1-136-165-00	FILM	0.1uF	5%	50V
C859	1-124-584-00	ELECT	100uF	2%	10V
		< CONNECTOR >			
CN801	1-774-755-11	CONNECTOR, BOARD TO BOARD 16P			
CN802	1-774-810-11	CONNECTOR, BOARD TO BOARD 12P			
		< DIODE >			
D821	8-719-988-62	DIODE	1SS355		
D823	8-719-977-24	DIODE	DTZ9.1B		
D824	8-719-976-88	DIODE	UDZ3.9B		

Ref. No.	Part No.	Description			Remark
		< IC >			
IC801	8-759-369-41	IC	HA13155 (6700RDS)		
IC801	8-759-369-42	IC	HA13153 (6600RDS)		
		< JUMPER RESISTOR >			
JC801-803					
	1-216-295-00	CONDUCTOR, CHIP	(2012)		
JC851	1-216-296-00	CONDUCTOR, CHIP	(3216)		
JC854	1-216-296-00	CONDUCTOR, CHIP	(3216)		
		< TRANSISTOR >			
Q801	8-729-920-21	TRANSISTOR	DTC314TKH04		
Q802	8-729-920-21	TRANSISTOR	DTC314TKH04		
Q821	8-729-920-21	TRANSISTOR	DTC314TKH04		
Q822	8-729-920-21	TRANSISTOR	DTC314TKH04		
Q851	8-729-921-25	TRANSISTOR	FMC2		
		< RESISTOR >			
R801	1-216-053-00	METAL CHIP	1.5K	5%	1/10W
R802	1-216-202-00	METAL GLAZE	1.5K	5%	1/8W
R805-808					
	1-216-077-00	METAL CHIP	15K	5%	1/10W
R809	1-216-129-00	METAL CHIP	2.2M	5%	1/10W
R810	1-216-129-00	METAL CHIP	2.2M	5%	1/10W
R811-814					
	1-216-134-00	METAL CHIP	2.2	5%	1/8W (6700RDS)
R821	1-216-053-00	METAL CHIP	1.5K	5%	1/10W
R822	1-216-053-00	METAL CHIP	1.5K	5%	1/10W
R825-828					
	1-216-077-00	METAL CHIP	15K	5%	1/10W
R829	1-216-129-00	METAL CHIP	2.2M	5%	1/10W
R830	1-216-129-00	METAL CHIP	2.2M	5%	1/10W
R831-834					
	1-216-134-00	METAL CHIP	2.2	5%	1/8W (6700RDS)
R851	1-216-238-00	METAL CHIP	47K	5%	1/8W
R852	1-216-097-00	METAL GLAZE	100K	5%	1/10W
R853	1-216-166-00	METAL GLAZE	47	5%	1/8W
R854	1-216-073-00	METAL CHIP	10K	5%	1/10W

Ref. No.	Part No.	Description				Remark
R855	1-216-049-11	METAL GLAZE	1K	5%	1/10W	
R856	1-216-073-00	METAL CHIP	10K	5%	1/10W	
R857	1-216-049-11	METAL GLAZE	1K	5%	1/10W	

****

KEY BOARD
****

*	3-921-656-01	PLATE, LIGHT GUIDE				
	3-921-957-01	HOLDER (LCD)				
*	3-921-659-01	PLATE (LCD), GROUND				
*	3-921-726-01	SHEET (LCD) (L)				
*	3-921-727-01	SHEET (LCD) (S)				
*	3-935-363-01	SHEET (REFLECTOR)				
		< CAPACITOR >				
C901	1-163-033-11	CERAMIC CHIP	0.022uF			50V
C902	1-165-319-11	CERAMIC CHIP	0.1uF			50V
C903	1-165-319-11	CERAMIC CHIP	0.1uF			50V
C904	1-163-251-11	CERAMIC CHIP	100PF		5%	50V
		< CONNECTOR >				
CNP901	1-764-423-11	PIN, CONNECTOR 12P				
		< DIODE >				
D901	8-719-988-62	DIODE	1SS355 (6700RDS)			
D902	8-719-976-99	DIODE	DTZ5.1B			
D903	8-719-056-84	DIODE	UDZ-TE-17-7.5B (6700RDS)			
D904	8-719-056-84	DIODE	UDZ-TE-17-7.5B			
D905	8-719-056-84	DIODE	UDZ-TE-17-7.5B			
D906	8-719-056-84	DIODE	UDZ-TE-17-7.5B			
D907	8-719-056-84	DIODE	UDZ-TE-17-7.5B			
		< IC >				
IC901	8-759-365-90	IC	LC75824W			
		< JUMPER RESISTOR >				
JC901	1-216-295-00	CONDUCTOR, CHIP			(2012)	(6600RDS)
JC902	1-216-295-00	CONDUCTOR, CHIP			(2012)	(6700RDS)
		< LIQUID CRYSTAL DISPLAY >				
LCD901	1-801-160-11	DISPLAY PANEL, LIQUID CRYSTAL				
		< SWITCH >				
LSW901	1-762-141-12	SWITCH, KEY BOARD (WITH LED) (OFF)				(6600RDS:AMBER)
LSW901	1-762-142-12	SWITCH, KEY BOARD (WITH LED) (OFF)				(6600RDS:GREEN)
LSW901	1-762-143-12	SWITCH, KEY BOARD (WITH LED) (OFF)				(6700RDS)
LSW902	1-762-141-12	SWITCH, KEY BOARD (WITH LED) (TUNER)				(6600RDS:AMBER)
LSW902	1-762-142-12	SWITCH, KEY BOARD (WITH LED) (TUNER)				(6600RDS:GREEN)
LSW902	1-762-143-12	SWITCH, KEY BOARD (WITH LED) (TUNER)				(6700RDS)
LSW903	1-762-141-12	SWITCH, KEY BOARD (WITH LED) (AF/TA)				(6600RDS:AMBER)
LSW903	1-762-142-12	SWITCH, KEY BOARD (WITH LED) (AF/TA)				(6600RDS:GREEN)
LSW903	1-762-143-12	SWITCH, KEY BOARD (WITH LED) (AF/TA)				(6700RDS)
LSW905	1-762-141-12	SWITCH, KEY BOARD (WITH LED) (SENS)				(6600RDS:AMBER)
LSW905	1-762-142-12	SWITCH, KEY BOARD (WITH LED) (SENS)				(6600RDS:GREEN)
LSW905	1-762-143-12	SWITCH, KEY BOARD (WITH LED) (SENS)				(6700RDS)
LSW906	1-762-141-12	SWITCH, KEY BOARD (WITH LED) (PTY)				(6600RDS:AMBER)
LSW906	1-762-142-12	SWITCH, KEY BOARD (WITH LED) (PTY)				(6600RDS:GREEN)
LSW906	1-762-143-12	SWITCH, KEY BOARD (WITH LED) (PTY)				(6700RDS)
LSW907	1-762-141-12	SWITCH, KEY BOARD (WITH LED) (D DSPL)				(6600RDS:AMBER)
LSW907	1-762-142-12	SWITCH, KEY BOARD (WITH LED) (D DSPL)				(6600RDS:GREEN)
LSW907	1-762-143-12	SWITCH, KEY BOARD (WITH LED) (D DSPL)				(6700RDS)
LSW908	1-762-141-12	SWITCH, KEY BOARD (WITH LED) (B BTM)				(6600RDS:AMBER)
LSW908	1-762-142-12	SWITCH, KEY BOARD (WITH LED) (B BTM)				(6600RDS:GREEN)
LSW908	1-762-143-12	SWITCH, KEY BOARD (WITH LED) (B BTM)				(6700RDS)
LSW909	1-762-141-12	SWITCH, KEY BOARD (WITH LED) (-)				(6600RDS:AMBER)
LSW909	1-762-142-12	SWITCH, KEY BOARD (WITH LED) (-)				(6600RDS:GREEN)
LSW909	1-762-143-12	SWITCH, KEY BOARD (WITH LED) (-)				(6700RDS)
LSW910	1-762-141-12	SWITCH, KEY BOARD (WITH LED) (SEL)				(6600RDS:AMBER)
LSW910	1-762-142-12	SWITCH, KEY BOARD (WITH LED) (SEL)				(6600RDS:GREEN)
LSW910	1-762-143-12	SWITCH, KEY BOARD (WITH LED) (SEL)				(6700RDS)
LSW911	1-762-141-12	SWITCH, KEY BOARD (WITH LED) (+)				(6600RDS:AMBER)

Ref. No.	Part No.	Description	Remark
LSW911	1-762-142-12	SWITCH, KEY BOARD (WITH LED) (+)	(6600RDS:GREEN)
LSW911	1-762-143-12	SWITCH, KEY BOARD (WITH LED) (+)	(6700RDS)
LSW912	1-762-141-12	SWITCH, KEY BOARD (WITH LED) (LOUD)	(6600RDS:AMBER)
LSW912	1-762-142-12	SWITCH, KEY BOARD (WITH LED) (LOUD)	(6600RDS:GREEN)
LSW912	1-762-143-12	SWITCH, KEY BOARD (WITH LED) (LOUD)	(6700RDS)
LSW913	1-762-141-12	SWITCH, KEY BOARD (WITH LED) (MUTE)	(6600RDS:AMBER)
LSW913	1-762-142-12	SWITCH, KEY BOARD (WITH LED) (MUTE)	(6600RDS:GREEN)
LSW913	1-762-143-12	SWITCH, KEY BOARD (WITH LED) (MUTE)	(6700RDS)
LSW921	1-762-141-12	SWITCH, KEY BOARD (WITH LED) (⏏)	(6600RDS:AMBER)
LSW921	1-762-142-12	SWITCH, KEY BOARD (WITH LED) (⏏)	(6600RDS:GREEN)
LSW921	1-762-143-12	SWITCH, KEY BOARD (WITH LED) (⏏)	(6700RDS)
LSW922	1-762-141-12	SWITCH, KEY BOARD (WITH LED) (TAPE ◀❚▶)	(6600RDS:AMBER)
LSW922	1-762-142-12	SWITCH, KEY BOARD (WITH LED) (TAPE ◀❚▶)	(6600RDS:GREEN)
LSW922	1-762-143-12	SWITCH, KEY BOARD (WITH LED) (TAPE ◀❚▶)	(6700RDS)
LSW923	1-762-141-12	SWITCH, KEY BOARD (WITH LED) (- ◀◀ (PRESET))	(6600RDS:AMBER)
LSW923	1-762-142-12	SWITCH, KEY BOARD (WITH LED) (- ◀◀ (PRESET))	(6600RDS:GREEN)
LSW923	1-762-143-12	SWITCH, KEY BOARD (WITH LED) (- ◀◀ (PRESET))	(6700RDS)
LSW924	1-762-141-12	SWITCH, KEY BOARD (WITH LED) (+ ▶▶ (PRESET))	(6600RDS:AMBER)
LSW924	1-762-142-12	SWITCH, KEY BOARD (WITH LED) (+ ▶▶ (PRESET))	(6600RDS:GREEN)
LSW924	1-762-143-12	SWITCH, KEY BOARD (WITH LED) (+ ▶▶ (PRESET))	(6700RDS)
LSW925	1-762-141-12	SWITCH, KEY BOARD (WITH LED) (+ ▶▶❚ (SEEK AMS))	(6600RDS:AMBER)
LSW925	1-762-142-12	SWITCH, KEY BOARD (WITH LED) (+ ▶▶❚ (SEEK AMS))	(6600RDS:GREEN)
LSW925	1-762-143-12	SWITCH, KEY BOARD (WITH LED) (+ ▶▶❚ (SEEK AMS))	(6700RDS)
LSW926	1-762-141-12	SWITCH, KEY BOARD (WITH LED) (- ❚◀◀ (SEEK AMS))	(6600RDS:AMBER)
LSW926	1-762-142-12	SWITCH, KEY BOARD (WITH LED) (- ❚◀◀ (SEEK AMS))	(6600RDS:GREEN)
LSW926	1-762-143-12	SWITCH, KEY BOARD (WITH LED) (- ❚◀◀ (SEEK AMS))	(6700RDS)
LSW927	1-762-141-12	SWITCH, KEY BOARD (WITH LED) (6 BL. SKIP)	(6600RDS:AMBER)
LSW927	1-762-142-12	SWITCH, KEY BOARD (WITH LED) (6 BL. SKIP)	(6600RDS:GREEN)
LSW927	1-762-143-12	SWITCH, KEY BOARD (WITH LED) (6 BL. SKIP)	(6700RDS)
LSW928	1-762-141-12	SWITCH, KEY BOARD (WITH LED) (5 ATA)	(6600RDS:AMBER)
LSW928	1-762-142-12	SWITCH, KEY BOARD (WITH LED) (5 ATA)	(6600RDS:GREEN)
LSW928	1-762-143-12	SWITCH, KEY BOARD (WITH LED) (5 ATA)	(6700RDS)
LSW929	1-762-141-12	SWITCH, KEY BOARD (WITH LED) (4)	(6600RDS:AMBER)
LSW929	1-762-142-12	SWITCH, KEY BOARD (WITH LED) (4)	(6600RDS:GREEN)
LSW929	1-762-143-12	SWITCH, KEY BOARD (WITH LED) (4 MTL)	(6700RDS)
LSW930	1-762-141-12	SWITCH, KEY BOARD (WITH LED) (1 INTRO)	(6600RDS:AMBER)
LSW930	1-762-142-12	SWITCH, KEY BOARD (WITH LED) (1 INTRO)	(6600RDS:GREEN)
LSW930	1-762-143-12	SWITCH, KEY BOARD (WITH LED) (1 INTRO)	(6700RDS)
LSW931	1-762-141-12	SWITCH, KEY BOARD (WITH LED) (2 REP)	(6600RDS:AMBER)
LSW931	1-762-142-12	SWITCH, KEY BOARD (WITH LED) (2 REP)	(6600RDS:GREEN)
LSW931	1-762-143-12	SWITCH, KEY BOARD (WITH LED) (2 REP)	(6700RDS)
LSW932	1-762-141-12	SWITCH, KEY BOARD (WITH LED) (3)	(6600RDS:AMBER)
LSW932	1-762-142-12	SWITCH, KEY BOARD (WITH LED) (3)	(6600RDS:GREEN)
LSW932	1-762-143-12	SWITCH, KEY BOARD (WITH LED) (3 ❚❚)	(6700RDS)

< PILOT LAMP >

PL901	1-517-407-21	LAMP, PILOT	(6700RDS)
PL902	1-517-407-21	LAMP, PILOT	(6700RDS)
PL903	1-517-406-21	LAMP, PILOT	(6700RDS, 6600RDS:AMBER)
PL903	1-517-407-21	LAMP, PILOT	(6600RDS:GREEN)
PL904	1-517-406-21	LAMP, PILOT	(6700RDS, 6600RDS:AMBER)
PL904	1-517-407-21	LAMP, PILOT	(6600RDS:GREEN)

< TRANSISTOR >

Q901	8-729-904-66	TRANSISTOR	DTD113EK	(6700RDS)
Q902	8-729-904-66	TRANSISTOR	DTD113EK	(6700RDS)
Q903	8-729-904-66	TRANSISTOR	DTD113EK	(6700RDS)
Q904	8-729-904-66	TRANSISTOR	DTD113EK	(6700RDS)

KEY **MAIN**

Ref. No.	Part No.	Description			Remark
		< RESISTOR >			
R901-903					
	1-216-045-00	METAL CHIP	680	5%	1/10W
R904	1-216-049-11	METAL GLAZE	1K	5%	1/10W
R905	1-216-053-00	METAL CHIP	1.5K	5%	1/10W
R906	1-216-053-00	METAL CHIP	1.5K	5%	1/10W
R907	1-216-057-00	METAL CHIP	2.2K	5%	1/10W
R908	1-216-061-00	METAL CHIP	3.3K	5%	1/10W
R909	1-216-065-00	METAL CHIP	4.7K	5%	1/10W
R910	1-216-069-00	METAL CHIP	6.8K	5%	1/10W
R911	1-216-073-00	METAL CHIP	10K	5%	1/10W
R912	1-216-077-00	METAL CHIP	15K	5%	1/10W
R921-923					
	1-216-045-00	METAL CHIP	680	5%	1/10W
R924	1-216-049-11	METAL GLAZE	1K	5%	1/10W
R925	1-216-053-00	METAL CHIP	1.5K	5%	1/10W
R926	1-216-053-00	METAL CHIP	1.5K	5%	1/10W
R927	1-216-057-00	METAL CHIP	2.2K	5%	1/10W
R928	1-216-061-00	METAL CHIP	3.3K	5%	1/10W
R929	1-216-065-00	METAL CHIP	4.7K	5%	1/10W
R930	1-216-069-00	METAL CHIP	6.8K	5%	1/10W
R931	1-216-073-00	METAL CHIP	10K	5%	1/10W
R951	1-216-041-00	METAL CHIP	470	5%	1/10W
R952	1-216-109-00	METAL CHIP	330K	5%	1/10W
R953-956					
	1-216-049-11	METAL GLAZE	1K	5%	1/10W
R961	1-216-025-00	METAL GLAZE	100	5%	1/10W (6600RDS:GREEN)
R961	1-216-029-00	METAL CHIP	150	5%	1/10W (6700RDS, 6600RDS:AMBER)
R962	1-216-025-00	METAL GLAZE	100	5%	1/10W (6700RDS)
R963	1-216-033-00	METAL CHIP	220	5%	1/10W (6600RDS:GREEN)
R963	1-216-037-00	METAL CHIP	330	5%	1/10W (6700RDS, 6600RDS:AMBER)
R964	1-216-033-00	METAL CHIP	220	5%	1/10W (6700RDS)
R965	1-216-033-00	METAL CHIP	220	5%	1/10W (6600RDS:GREEN)
R965	1-216-037-00	METAL CHIP	330	5%	1/10W (6700RDS, 6600RDS:AMBER)
R966	1-216-033-00	METAL CHIP	220	5%	1/10W (6700RDS)
R967	1-216-033-00	METAL CHIP	220	5%	1/10W (6600RDS:GREEN)
R967	1-216-037-00	METAL CHIP	330	5%	1/10W (6700RDS, 6600RDS:AMBER)
R968	1-216-033-00	METAL CHIP	220	5%	1/10W (6700RDS)
R969	1-216-025-00	METAL GLAZE	100	5%	1/10W (6600RDS:GREEN)
R969	1-216-029-00	METAL CHIP	150	5%	1/10W (6700RDS, 6600RDS:AMBER)
R970	1-216-025-00	METAL GLAZE	100	5%	1/10W (6700RDS)
R971	1-216-033-00	METAL CHIP	220	5%	1/10W (6600RDS:GREEN)
R971	1-216-037-00	METAL CHIP	330	5%	1/10W (6700RDS, 6600RDS:AMBER)
R972	1-216-033-00	METAL CHIP	220	5%	1/10W (6700RDS)
R973	1-216-025-00	METAL GLAZE	100	5%	1/10W (6600RDS:GREEN)
R973	1-216-029-00	METAL CHIP	150	5%	1/10W (6700RDS, 6600RDS:AMBER)
R974	1-216-174-00	METAL GLAZE	100	5%	1/8W (6700RDS)
R975	1-216-296-00	CONDUCTOR, CHIP	(3216)		(6700RDS)
R976	1-216-025-00	METAL GLAZE	100	5%	1/10W (6700RDS)
R977	1-216-049-11	METAL GLAZE	1K	5%	1/10W (6700RDS)
R978	1-216-296-00	CONDUCTOR, CHIP	(3216)		

****

*	A-3309-081-A	MAIN BOARD, COMPLETE	(6600RDS:G)
*	A-3309-082-A	MAIN BOARD, COMPLETE	(6600RDS:AEP, UK)
*	A-3309-088-A	MAIN BOARD, COMPLETE	(6700RDS:AEP, UK)
*	A-3309-089-A	MAIN BOARD, COMPLETE	(6700RDS:G)

****

< CAPACITOR >

C1	1-163-235-11	CERAMIC CHIP	22PF	5%	50V
C2	1-163-133-00	CERAMIC CHIP	470PF	5%	50V
C3-5					
	1-124-584-00	ELECT	100uF	20%	10V
C6	1-164-232-11	CERAMIC CHIP	0.01uF		50V
C7	1-164-232-11	CERAMIC CHIP	0.01uF		50V
C9	1-164-161-11	CERAMIC CHIP	0.0022uF	10%	100V
C10	1-126-157-11	ELECT	10uF	20%	16V
C11	1-136-169-00	FILM	0.22uF	5%	50V
C12	1-136-165-00	FILM	0.1uF	5%	50V
C13	1-137-368-11	FILM	0.0047uF	5%	50V
C14	1-137-364-11	FILM	0.001uF	5%	50V
C15	1-124-584-00	ELECT	100uF	20%	10V
C16	1-136-159-00	FILM	0.033uF	5%	50V
C17	1-137-366-11	FILM	0.0022uF	5%	50V
C18-21					
	1-163-251-11	CERAMIC CHIP	100PF	5%	50V
C22	1-164-222-11	CERAMIC CHIP	0.22uF		25V
C23	1-126-157-11	ELECT	10uF	20%	16V

Ref. No.	Part No.	Description			Remark
C24	1-163-237-11	CERAMIC CHIP	27PF	5%	50V
C25	1-163-104-00	CERAMIC CHIP	30PF	5%	50V
C26	1-163-127-00	CERAMIC CHIP	270PF	5%	50V
C27	1-163-009-11	CERAMIC CHIP	0.001uF	10%	50V
C28	1-126-157-11	ELECT	10uF	20%	16V
C29	1-163-031-11	CERAMIC CHIP	0.01uF		50V
C30	1-163-237-11	CERAMIC CHIP	27PF	5%	50V
C31	1-163-237-11	CERAMIC CHIP	27PF	5%	50V
C32	1-126-301-11	ELECT	1uF	20%	50V
C35	1-164-232-11	CERAMIC CHIP	0.01uF		50V
C101	1-163-037-11	CERAMIC CHIP	0.022uF	10%	25V
C102	1-126-301-11	ELECT	1uF	20%	50V
C103	1-165-320-11	CERAMIC CHIP	0.47uF	10%	16V
C111	1-126-157-11	ELECT	10uF	20%	16V
C112	1-163-009-11	CERAMIC CHIP	0.001uF	10%	50V
C113	1-126-157-11	ELECT	10uF	20%	16V
C114	1-164-161-11	CERAMIC CHIP	0.0022uF	10%	100V
C115	1-163-037-11	CERAMIC CHIP	0.022uF	10%	25V
C116	1-164-004-11	CERAMIC CHIP	0.1uF	10%	25V
C118	1-126-157-11	ELECT	10uF	20%	16V
C119	1-126-157-11	ELECT	10uF	20%	16V
C122	1-163-251-11	CERAMIC CHIP	100PF	5%	50V (6700RDS)
C151	1-164-004-11	CERAMIC CHIP	0.1uF	10%	25V
C152	1-163-809-11	CERAMIC CHIP	0.047uF	10%	25V
C153	1-164-004-11	CERAMIC CHIP	0.1uF	10%	25V
C155	1-124-234-00	ELECT	22uF	20%	16V
C157	1-124-584-00	ELECT	100uF	20%	10V
C158	1-163-031-11	CERAMIC CHIP	0.01uF		50V
C201	1-163-037-11	CERAMIC CHIP	0.022uF	10%	25V
C202	1-126-301-11	ELECT	1uF	20%	50V
C203	1-107-823-11	CERAMIC CHIP	0.47uF	10%	16V
C211	1-126-157-11	ELECT	10uF	20%	16V
C212	1-163-009-11	CERAMIC CHIP	0.001uF	10%	50V
C213	1-126-157-11	ELECT	10uF	20%	16V
C214	1-164-161-11	CERAMIC CHIP	0.0022uF	10%	100V
C215	1-163-037-11	CERAMIC CHIP	0.022uF	10%	25V
C216	1-163-077-00	CERAMIC CHIP	0.1uF	10%	25V
C218	1-126-157-11	ELECT	10uF	20%	16V
C219	1-126-157-11	ELECT	10uF	20%	16V
C222	1-163-251-11	CERAMIC CHIP	100PF	5%	50V (6700RDS)
C301	1-163-009-11	CERAMIC CHIP	0.001uF	10%	50V
C302	1-163-125-00	CERAMIC CHIP	220PF	5%	50V
C303	1-163-125-00	CERAMIC CHIP	220PF	5%	50V
C304	1-164-232-11	CERAMIC CHIP	0.01uF		50V
C305	1-164-489-11	CERAMIC CHIP	0.22uF	10%	16V
C306	1-164-004-11	CERAMIC CHIP	0.1uF	10%	25V (6700RDS)

Ref. No.	Part No.	Description			Remark
C308	1-124-463-00	ELECT	0.1uF	20%	50V
C309	1-164-004-11	CERAMIC CHIP	0.1uF	10%	25V
C350	1-124-234-00	ELECT	22uF	20%	16V
C351	1-163-251-11	CERAMIC CHIP	100PF	5%	50V
C353	1-124-465-00	ELECT	0.47uF	20%	50V
C354	1-164-232-11	CERAMIC CHIP	0.01uF		50V
C356	1-164-004-11	CERAMIC CHIP	0.1uF	10%	25V
C357	1-124-584-00	ELECT	100uF	20%	10V
C362	1-165-319-11	CERAMIC CHIP	0.1uF		50V
C363	1-165-319-11	CERAMIC CHIP	0.1uF		50V
C364	1-164-222-11	CERAMIC CHIP	0.22uF		25V
C365	1-126-157-11	ELECT	10uF	20%	16V
C366	1-124-234-00	ELECT	22uF	20%	16V
C367	1-124-120-11	ELECT	220uF	20%	25V
C401	1-163-009-11	CERAMIC CHIP	0.001uF	10%	50V
C402	1-163-125-00	CERAMIC CHIP	220PF	5%	50V
C403	1-163-125-00	CERAMIC CHIP	220PF	5%	50V
C404	1-164-232-11	CERAMIC CHIP	0.01uF		50V
C405	1-164-489-11	CERAMIC CHIP	0.22uF	10%	16V
C406	1-164-004-11	CERAMIC CHIP	0.1uF	10%	25V (6700RDS)
C408	1-124-463-00	ELECT	0.1uF	20%	50V
C409	1-164-004-11	CERAMIC CHIP	0.1uF	10%	25V
C501	1-124-584-00	ELECT	100uF	20%	10V
C502	1-164-505-11	CERAMIC CHIP	2.2uF		16V
C503	1-163-099-00	CERAMIC CHIP	18PF	5%	50V
C504	1-163-235-11	CERAMIC CHIP	22PF	5%	50V
C505	1-165-319-11	CERAMIC CHIP	0.1uF		50V
C506	1-164-232-11	CERAMIC CHIP	0.01uF		50V
C507	1-164-346-11	CERAMIC CHIP	1uF		16V
C509	1-163-059-00	CERAMIC CHIP	0.01uF	10%	50V
C601	1-163-081-00	CERAMIC CHIP	0.22uF		25V
C603	1-125-705-11	CAPACITOR	0.22F		5.5V
C604	1-124-443-00	ELECT	100uF	20%	10V
C605	1-126-157-11	ELECT	10uF	20%	16V
C606	1-124-234-00	ELECT	22uF	20%	16V
C607	1-126-157-11	ELECT	10uF	20%	16V
C608	1-126-967-11	ELECT	47uF	20%	16V
C609	1-126-967-11	ELECT	47uF	20%	16V
C610	1-124-234-00	ELECT	22uF	20%	16V
C612	1-126-301-11	ELECT	1uF	20%	50V
C613	1-164-232-11	CERAMIC CHIP	0.01uF		50V
C614	1-163-117-00	CERAMIC CHIP	100PF	5%	50V
C615	1-163-117-00	CERAMIC CHIP	100PF	5%	50V
C616	1-165-319-11	CERAMIC CHIP	0.1uF		50V
C617	1-126-157-11	ELECT	10uF	20%	16V
C619	1-165-319-11	CERAMIC CHIP	0.1uF		50V
C650	1-126-936-11	ELECT	3300uF	20%	16V

MAIN

Ref. No.	Part No.	Description	Remark
		< JACK >	
CN150	1-774-698-11	JACK, PIN 2P (LINE OUT) (6700RDS)	
		< CONNECTOR >	
CN351	1-766-260-11	CONNECTOR, FFC/FPC (ZIF) 7P	
* CN352	1-506-995-11	PIN, CONNECTOR (PC BOARD) 13P	
CN602	1-764-422-11	PLUG, CONNECTOR 12P	
* CN603	1-770-212-11	CONNECTOR, BOARD TO BOARD 16P	
CN604	1-774-809-11	CONNECTOR, BOARD TO BOARD 12P	
CN605	1-774-701-11	PIN, CONNECTOR 16P	
		< DISCHARGE GAP >	
CP1	1-519-504-11	GAP, DISCHARGE	
		< DIODE >	
D2	8-719-991-65	DIODE SB02W03C	
D3	8-719-977-27	DIODE DTZ10A	
D350	8-719-988-62	DIODE 1SS355	
D361	8-719-977-27	DIODE DTZ10A	
D362	8-719-988-62	DIODE 1SS355	
D501	8-719-976-88	DIODE UDZ3.9B	
D504	8-719-988-62	DIODE 1SS355	
D505	8-719-988-62	DIODE 1SS355	
D506	8-719-988-62	DIODE 1SS355	
D601	8-719-978-50	DIODE DTZ-TT11-10C	
D605	8-719-977-03	DIODE DTZ5.6B	
D606	8-719-977-17	DIODE DTZ7.5C	
D607	8-719-914-43	DIODE DAN202K	
D609	8-719-109-97	DIODE RD6.8ES-B2	
D610	8-719-109-97	DIODE RD6.8ES-B2	
D611	8-719-109-97	DIODE RD6.8ES-B2	
D612	8-719-109-97	DIODE RD6.8ES-B2	
D613	8-719-109-97	DIODE RD6.8ES-B2	
D614	8-719-109-97	DIODE RD6.8ES-B2	
D615	8-719-056-84	DIODE UDZ-TE-17-7.5B	
D616	8-719-923-93	DIODE MTZJ-T-77-16C	
D617	8-719-056-84	DIODE UDZ-TE-17-7.5B	
D618	8-719-109-97	DIODE RD6.8ES-B2	
D619	8-719-109-97	DIODE RD6.8ES-B2	
D620	8-719-200-82	DIODE 11ES2	
D621	8-719-200-82	DIODE 11ES2	
D622	8-719-056-84	DIODE UDZ-TE-17-7.5B	
D624	8-719-988-62	DIODE 1SS355	
D650	8-719-049-38	DIODE 1N5404TU	
D651	8-719-977-69	DIODE DTZ24B	
D652	8-719-977-69	DIODE DTZ24B	
D653	8-719-056-84	DIODE UDZ-TE-17-7.5B	

Ref. No.	Part No.	Description	Remark
D701	8-719-923-93	DIODE MTZJ-T-77-16C	
D702	8-719-977-17	DIODE DTZ7.5C	
		< IC >	
IC1	8-759-242-66	IC TC4W66F	
IC2	8-759-823-81	IC LC7216M	
IC3	8-759-163-63	IC TDA7330BD-013TR	
IC151	8-759-368-11	IC LC75372E	
IC152	8-759-909-71	IC BA4558F	
IC351	8-752-075-58	IC CXA2510Q-T4 (6700RDS)	
IC351	8-752-076-05	IC CXA2509Q-T4 (6600RDS)	
IC360	8-759-823-87	IC LB1638M	
IC501	8-759-372-63	IC MN1884820S3T	
IC571	8-759-363-81	IC XC61AN4002PR	
IC601	8-759-347-50	IC BA3918-V3	
		< JACK >	
J1	1-770-279-11	JACK (ISO) (ANTENNA)	
J501	1-566-822-41	JACK (REMOTE IN)	
		< JUMPER RESISTOR >	
JC2-6	1-216-295-00	CONDUCTOR, CHIP (2012)	
JC9-18	1-216-295-00	CONDUCTOR, CHIP (2012)	
JC351	1-216-296-00	CONDUCTOR, CHIP (3216)	(6600RDS)
JC354	1-216-295-00	CONDUCTOR, CHIP (2012)	
JC501	1-216-296-00	CONDUCTOR, CHIP (3216)	
JC502	1-216-296-00	CONDUCTOR, CHIP (3216)	
JC504-513	1-216-296-00	CONDUCTOR, CHIP (3216)	
JC515-517	1-216-296-00	CONDUCTOR, CHIP (3216)	
JC519-523	1-216-296-00	CONDUCTOR, CHIP (3216)	
JC525-534	1-216-296-00	CONDUCTOR, CHIP (3216)	
		< COIL >	
L4	1-410-971-31	INDUCTOR 10uH	
L501	1-410-971-31	INDUCTOR 10uH	
L601	1-411-669-11	COIL, CHOKE	
		< TRANSISTOR >	
Q2	8-729-120-28	TRANSISTOR 2SC1623-L5L6	
Q3	8-729-021-94	TRANSISTOR 2SK1657-T1B	
Q4	8-729-900-53	TRANSISTOR DTC114EK	
Q101	8-729-920-21	TRANSISTOR DTC314TKH04	
Q201	8-729-920-21	TRANSISTOR DTC314TKH04	

Ref. No.	Part No.	Description				Remark
Q361	8-729-922-65	TRANSISTOR	2SD1760F5-PQR			
Q362	8-729-920-41	TRANSISTOR	FMC3			
Q364	8-729-106-60	TRANSISTOR	2SB1115A			
Q365	8-729-900-53	TRANSISTOR	DTC114EK			
Q501	8-729-921-25	TRANSISTOR	FMC2			
Q503	8-729-120-28	TRANSISTOR	2SC1623-L5L6			
Q603	8-729-030-18	TRANSISTOR	2SD2525			
Q605	8-729-921-25	TRANSISTOR	FMC2			
Q606	8-729-027-23	TRANSISTOR	DTA114EKA-T146			
Q607	8-729-030-18	TRANSISTOR	2SD2525			
Q608	8-729-027-23	TRANSISTOR	DTA114EKA-T146			
Q609	8-729-922-65	TRANSISTOR	2SD1760F5-PQR			
Q610	8-729-120-28	TRANSISTOR	2SC1623-L5L6			
Q611	8-729-120-28	TRANSISTOR	2SC1623-L5L6			
Q612	8-729-120-28	TRANSISTOR	2SC1623-L5L6			
Q701	8-729-900-53	TRANSISTOR	DTC114EK			
Q702	8-729-921-25	TRANSISTOR	FMC2			
		< RESISTOR >				
R1	1-216-049-11	METAL GLAZE	1K	5%	1/10W	
R2	1-216-061-00	METAL CHIP	3.3K	5%	1/10W	
R3	1-216-073-00	METAL CHIP	10K	5%	1/10W	
R4	1-216-097-00	METAL GLAZE	100K	5%	1/10W	
R5	1-216-037-00	METAL CHIP	330	5%	1/10W	
R6	1-216-065-00	METAL CHIP	4.7K	5%	1/10W	
R7	1-216-073-00	METAL CHIP	10K	5%	1/10W	
R8	1-216-238-00	METAL GLAZE	47K	5%	1/8W	
R9	1-216-057-00	METAL CHIP	2.2K	5%	1/10W	
R10	1-216-049-11	METAL GLAZE	1K	5%	1/10W	
R11	1-216-075-00	METAL CHIP	12K	5%	1/10W	
R12	1-216-238-00	METAL GLAZE	47K	5%	1/8W	
R13	1-216-057-00	METAL CHIP	2.2K	5%	1/10W	
R14	1-216-057-00	METAL CHIP	2.2K	5%	1/10W	
R15	1-216-073-00	METAL CHIP	10K	5%	1/10W	
R16	1-216-057-00	METAL CHIP	2.2K	5%	1/10W	
R17	1-216-129-00	METAL CHIP	2.2M	5%	1/10W	
R19	1-216-073-00	METAL CHIP	10K	5%	1/10W	
R101	1-216-065-00	METAL CHIP	4.7K	5%	1/10W	(G)
R101	1-216-073-00	METAL CHIP	10K	5%	1/10W	(AEP, UK)
R102	1-216-079-00	METAL CHIP	18K	5%	1/10W	(AEP, UK)
R102	1-216-085-00	METAL CHIP	33K	5%	1/10W	(G)
R103	1-216-077-00	METAL CHIP	15K	5%	1/10W	
R104	1-216-085-00	METAL CHIP	33K	5%	1/10W	
R108	1-216-230-00	METAL GLAZE	22K	5%	1/8W	
R109	1-216-085-00	METAL CHIP	33K	5%	1/10W	
R151	1-216-069-00	METAL CHIP	6.8K	5%	1/10W	
R152	1-216-065-00	METAL CHIP	4.7K	5%	1/10W	

Ref. No.	Part No.	Description				Remark
R201	1-216-065-00	METAL CHIP	4.7K	5%	1/10W	(G)
R201	1-216-073-00	METAL CHIP	10K	5%	1/10W	(AEP, UK)
R202	1-216-079-00	METAL CHIP	18K	5%	1/10W	(AEP, UK)
R202	1-216-085-00	METAL CHIP	33K	5%	1/10W	(G)
R203	1-216-226-00	METAL GLAZE	15K	5%	1/8W	
R204	1-216-085-00	METAL CHIP	33K	5%	1/10W	
R208	1-216-230-00	METAL GLAZE	22K	5%	1/8W	
R209	1-216-085-00	METAL CHIP	33K	5%	1/10W	
R303	1-216-076-00	METAL CHIP	13K	5%	1/10W	
R304	1-216-077-00	METAL CHIP	15K	5%	1/10W	(6700RDS)
R305	1-216-258-00	METAL CHIP	330K	5%	1/8W	
R306	1-216-041-00	METAL CHIP	470	5%	1/10W	(6600RDS)
R307	1-216-069-00	METAL CHIP	6.8K	5%	1/10W	
R308	1-216-079-00	METAL CHIP	18K	5%	1/10W	
R351	1-208-812-11	METAL GLAZE	18K	2%	1/10W	
R352	1-216-109-00	METAL CHIP	330K	5%	1/10W	
R353	1-216-065-00	METAL CHIP	4.7K	5%	1/10W	
R354	1-216-077-00	METAL CHIP	15K	5%	1/10W	
R355	1-216-009-00	METAL GLAZE	22	5%	1/10W	
R361	1-216-049-11	METAL GLAZE	1K	5%	1/10W	
R362	1-249-389-11	CARBON	4.7	5%	1/4W	
R363	1-249-389-11	CARBON	4.7	5%	1/4W	
R364	1-216-222-00	METAL GLAZE	10K	5%	1/8W	
R365	1-216-214-00	METAL GLAZE	4.7K	5%	1/8W	
R403	1-216-076-00	METAL CHIP	13K	5%	1/10W	
R404	1-216-077-00	METAL CHIP	15K	5%	1/10W	(6700RDS)
R405	1-216-109-00	METAL CHIP	330K	5%	1/10W	
R406	1-216-041-00	METAL CHIP	470	5%	1/10W	(6600RDS)
R407	1-216-069-00	METAL CHIP	6.8K	5%	1/10W	
R408	1-216-079-00	METAL CHIP	18K	5%	1/10W	
R505	1-216-049-11	METAL GLAZE	1K	5%	1/10W	
R506	1-216-109-00	METAL CHIP	330K	5%	1/10W	
R507	1-216-049-11	METAL GLAZE	1K	5%	1/10W	
R508	1-216-057-00	METAL CHIP	2.2K	5%	1/10W	
R509	1-216-049-11	METAL GLAZE	1K	5%	1/10W	
R510-512	1-216-097-00	METAL GLAZE	100K	5%	1/10W	
R513	1-216-246-00	METAL GLAZE	100K	5%	1/8W	
R514	1-216-198-00	METAL GLAZE	1K	5%	1/8W	
R515-517	1-216-049-11	METAL GLAZE	1K	5%	1/10W	
R518	1-216-246-00	METAL GLAZE	100K	5%	1/8W	
R521	1-216-246-00	METAL GLAZE	100K	5%	1/8W	

MAIN

Ref. No.	Part No.	Description				Remark
R522-528						
	1-216-097-00	METAL GLAZE	100K	5%	1/10W	
R531	1-216-097-00	METAL GLAZE	100K	5%	1/10W	(6600RDS)
R532	1-216-097-00	METAL GLAZE	100K	5%	1/10W	(6700RDS)
R533	1-216-097-00	METAL GLAZE	100K	5%	1/10W	(6700RDS)
R534	1-216-097-00	METAL GLAZE	100K	5%	1/10W	(6600RDS)
R536	1-216-295-00	CONDUCTOR, CHIP	(2012)			
R537	1-216-097-00	METAL GLAZE	100K	5%	1/10W	(6700RDS)
R538	1-216-085-00	METAL CHIP	33K	5%	1/10W	(6700RDS)
R538	1-216-295-00	CONDUCTOR, CHIP	(2012)			(6600RDS)
R540	1-216-295-00	CONDUCTOR, CHIP	(2012)			
R542	1-216-295-00	CONDUCTOR, CHIP	(2012)			
R543	1-216-025-00	METAL GLAZE	100	5%	1/10W	
R544	1-216-049-11	METAL GLAZE	1K	5%	1/10W	
R548	1-216-073-00	METAL CHIP	10K	5%	1/10W	
R549	1-216-073-00	METAL CHIP	10K	5%	1/10W	
R550	1-216-073-00	METAL CHIP	100K	5%	1/10W	(6700RDS)
R551	1-216-222-00	METAL GLAZE	10K	5%	1/8W	
R552	1-216-073-00	METAL CHIP	10K	5%	1/10W	(6700RDS)
R601	1-216-057-00	METAL CHIP	2.2K	5%	1/10W	
R602	1-216-097-00	METAL GLAZE	100K	5%	1/10W	
R603	1-216-085-00	METAL CHIP	33K	5%	1/10W	
R604	1-216-089-00	METAL GLAZE	47K	5%	1/10W	
R605	1-216-089-00	METAL GLAZE	47K	5%	1/10W	
R606	1-216-206-00	METAL GLAZE	2.2K	5%	1/8W	
R607	1-216-073-00	METAL CHIP	10K	5%	1/10W	
R608	1-216-097-00	METAL GLAZE	100K	5%	1/10W	
R609	1-216-186-00	METAL GLAZE	330	5%	1/8W	
R610	1-249-385-11	CARBON	2.2	5%	1/6W	
R611	1-249-385-11	CARBON	2.2	5%	1/6W	
R612	1-216-025-00	METAL GLAZE	100	5%	1/10W	
R613	1-216-025-00	METAL GLAZE	100	5%	1/10W	
R614	1-208-806-11	METAL CHIP	10K	0.50%	1/10W	
R615	1-208-806-11	METAL CHIP	10K	0.50%	1/10W	
R616	1-216-057-00	METAL CHIP	2.2K	5%	1/10W	
R617	1-216-025-00	METAL GLAZE	100	5%	1/10W	
R618	1-208-806-11	METAL CHIP	10K	0.50%	1/10W	
R619	1-208-510-61	METAL GLAZE	10K	2%	1/8W	
R620	1-216-025-00	METAL GLAZE	100	5%	1/10W	
R621	1-216-097-00	METAL CHIP	100K	5%	1/10W	
R622	1-216-097-00	METAL GLAZE	100K	5%	1/10W	
R623	1-216-174-00	METAL CHIP	100	5%	1/8W	
R702	1-216-113-00	METAL CHIP	470K	5%	1/10W	
R703	1-216-073-00	METAL CHIP	10K	5%	1/10W	

< VARIABLE RESISTOR >

RV1	1-241-768-11	RES, ADJ, CARBON 220K
RV301	1-238-597-11	RES, ADJ, CARBON 1K (6700RDS)
RV401	1-238-597-11	RES, ADJ, CARBON 1K (6700RDS)

< SWITCH >

S501	1-571-478-11	SWITCH, SLIDE (POWER SELECT)
S601	1-692-431-21	SWITCH, TACTILE (RESET)

< TUNER UNIT >

TU1	A-3282-012-A	TUNER UNIT (TUX-006)

< VIBRATOR >

X1	1-567-848-11	VIBRATOR, CRYSTAL (7.2MHz)
X2	1-579-242-41	VIBRATOR, CRYSTAL (4.332MHz)
X501	1-579-952-21	VIBRATOR, CERAMIC (8MHz)
X502	1-567-098-41	VIBRATOR, CRYSTAL (32.768kHz)

****

MISCELLANEOUS
****

10	1-776-527-31	CORD (WITH CONNECTOR) (ISO)
130	1-765-460-12	CORD (WITH CONNECTOR)
F601	1-533-331-11	FUSE (BLADE TYPE) (AUTO FUSE) (15A)
HP901	1-500-196-21	HEAD, MAGNETIC (PLAYBACK)
M901	X-3368-684-1	MOTOR ASSY, MAIN (CAPSTAN/REEL)
M902	X-3368-685-1	MOTOR ASSY, SUB (LOADING/TAPE OPERATION)
S901	1-692-885-11	SWITCH, ROTARY SLIDE (TAPE OPERATION)

****

Ref. No.	Part No.	Description	Remark
		ACCESSORIES & PACKING MATERIALS	
		**********	
	3-810-046-11	MANUAL, INSTRUCTION (ENGLISH, FRENCH, GERMAN, ITALIAN) (6700RDS:G)	
	3-810-046-21	MANUAL, INSTRUCTION (SPANISH, DUTCH, SWEDISH, PORTUGUESE) (6700RDS:AEP, UK)	
	3-810-054-11	MANUAL, INSTRUCTION, INSTALL (ENGLISH, FRENCH, GERMAN, ITALIAN) (6600RDS/6700RDS:G)	
	3-810-054-21	MANUAL, INSTRUCTION, INSTALL (SPANISH, DUTCH, SWEDISH, PORTUGUESE) (AEP, UK)	
	3-810-634-11	MANUAL, INSTRUCTION (ENGLISH, FRENCH, GERMAN, ITALIAN) (6600RDS:G)	
	3-810-634-21	MANUAL, INSTRUCTION (SPANISH, DUTCH, SWEDISH, PORTUGUESE) (6600RDS:AEP, UK)	
	X-3367-795-1	CASE ASSY	

****

****
HARDWARE LIST
****

#1	7-621-770-67	SCREW +PTT 2.6X6 (S)
#2	7-621-770-XX	SCREW +PTT 2.6X8 (S)
#3	7-685-106-19	SCREW +P 2X10 TYPE2 NON-SLIT
#4	7-627-553-17	PRECISION SCREW +P 2X2 TYPE 3
#5	7-628-253-00	SCREW +PS 2X4
#6	7-624-104-04	STOP RING 2.0, TYPE -E
#7	7-621-772-10	SCREW +B 2X4

****

Ref. No.	Part No.	Description	Remark
		MOUNTING HARDWARE	
		**********	
* 151	3-916-161-01	FRAME, FITTING	
152	3-386-828-01	SCREW, FITTING	
153	3-349-410-01	BUSHING	
154	3-388-078-01	KEY	
155	X-3370-077-1	SCREW ASSY (AE.KEY), FITTING	
156	1-776-527-31	CORD (WITH CONNECTOR) (ISO)	
157	1-575-616-21	CORD (WITH TERMINAL) (6700RDS)