XR-7040/7041/7042/U110

SERVICE MANUAL

US Model
Canadian Model
XR-U110
AEP Model
XR-7040/7041
E Model
XR-7040
Germany Model
XR-7042

Photo : XR-7042

Model Name Using Similar Mechanism	XR-5350/5352
Tape Transport Mechanism Type	MG-36SZ3-32

SPECIFICATIONS

AUDIO POWER SPECIFICATIONS (XR-U110)

POWER OUTPUT AND TOTAL HARMONIC DISTORTION 9 watts per channel minimum continuous average power into 4 ohms, 4 channels driven, from 30 – 20,000 Hz with no more than 1% total hormonic distortion.

Other specifications

Power amplifier section

Outputs	Speaker outputs (sure seal connectors)
Speaker impedance	3.2 – 8 ohms
Maximum power output	XR-7040/7041/U110: 25W×4 (at 4 ohms) XR-7042: 22W×4 (at 4 ohms)

Cassette player section

Tape track	4-track 2-channel stereo
Frequency response	30 – 15,000 Hz
Signal-to-noise ratio	55 dB
Wow and flutter	0.15% (WRMS)

Tuner section

FM

Tuning range	XR-U110: 87.5–107.9MHz XR-7040/7041/7042: 87.5–108.0MHz
Antenna terminal	External antenna connector
Intermediate frequency	10.7 MHz
Usable sensitivity	13 dBf (75 ohms)
Selectivity	70 dB at 400 kHz
Signal-to-noise ratio	65 dB (stereo), 70 dB (mono)
Harmonic distortion at 1 kHz	0.9% (stereo), 0.5% (mono)
Separation	35 dB at 1 kHz
Frequency response	30 – 15,000 Hz
Capture ratio	2 dB

—Continued on next page—

FM/AM CASSETTE CAR STEREO
XR-7040/7042/U110

FM/MW/LW CASSETTE CAR STEREO

MICROFILM

www.manualscenter.com

SONY®

AM (MW/LW)

Tuning range	XR-U110: 530–1,710kHz XR-7040/7042: 531 – 1,602 kHz XR-7041: MW: 531 – 1,602 kHz LW: 153 – 281 kHz
Antenna terminal	External antenna connector
Intermediate frequency	450 kHz
Sensitivity	XR-7040/7042/U110: 35 µV XR-7041: MW: 35 µV LW: 70 µV

General

Tone controls	Bass ±10 dB at 100 Hz Treble ±10 dB at 10 kHz
Loudness	+10 dB at 100 Hz +6 dB at 10 kHz
Power requirements	12 V DC car battery (negative ground)
Dimensions	Approx. 186 × 57 × 174 mm (7 3/8 × 2 1/4 × 6 7/8 in.) (w/h/d), not incl. projecting parts and controls
Mounting dimensions	Approx. 182 × 53 × 154 mm (7 1/4 × 2 1/8 × 6 1/8 in.) (w/h/d), not incl. projecting parts and controls
Mass	Approx. 1.3 kg (2 lb. 14 oz.)
Supplied accessories	Mounting hardware (1 set) Power connecting cord (1) Front panel case (1)

Design and specifications subject to change without notice.

NOTES ON CHIP COMPONENT REPLACEMENT

- Never reuse a disconnected chip component.
- Notice that the minus side of a tantalum capacitor may be damaged by heat.

Features

General

- **Detachable-front panel** enables you to take the front panel away with you when you leave your car.
- **Built-in power amplifier (max. output: 25 W x 4)** enables you to enjoy a 4-speaker system (XR-7040/7041/U110).
- **Built-in power amplifier (max. output:** 22 W x 4) enables you to enjoy a 4-speaker system (XR-7042).
- **Caution alarm** will be activated if you turn off the ignition key without removing the front panel from the unit (XR-7040/7041/7042).
- Provided with a **digital 12-hour clock.**

Cassette player section

ATA (Automatic Tuner Activation) for automatically turning on the tuner during the fast-forwarding or rewinding of a tape.

Tuner section

- **SSIR (Sony Super Interference Rejection) PLL synthesizer tuner.**
- Up to 24 stations can be preset: 18 stations on FM and 6 stations on AM (XR-7040/7042/U110).
- Up to 30 stations can be preset: 18 stations on FM and 6 stations each on MW and LW (XR-7041).
- **BTM (Best Tuning Memory) function** automatically selects and stores the stations with the strongest signals on the preset number buttons in order of frequency.
- **Traffic information stand-by function (SDK)** for automatically starting the traffic information broadcasts whenever the unit receives them even while listening to a radio program, tape playback or CD play. (XR-7042)

CD changer control section

(when the optional Sony CD changers are connected)

- **Several CD changers can be connected and controlled** by the use of the Sony source selector (not supplied) with the unit.
- **Intro scan function** for playing the first 10 seconds of each track of every disc.
- **Repeat play function** for playing a track, a disc or a changer repeatedly.
- **Shuffle play function** for playing tracks in random order.

www.manualscenter.com

Setting the Clock

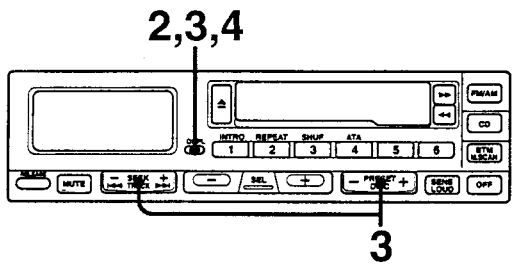

The clock has a 12-hour digital indication.

For example, set it to 10:08.

1 **Turn the ignition key to the ON position.**

2 **Press the DSPL button if the clock indication does not come on.**

DSPL

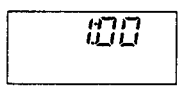

3 **Press the DSPL button for more than two seconds.**

DSPL

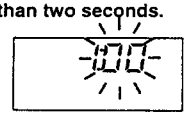

While holding down the DSPL button

Press [– SEEK TRACK +] **to set the hour digits.**
(to go back) (to go forward)

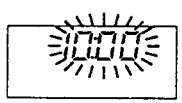

Press [– PRESET DISC +] **to set the minute digits.**
(to go back) (to go forward)

4 **The clock starts activating when you take your finger off the DSPL button.**

Note
If the POWER SELECT switch of the unit is set to the OFF position, the clock cannot be set unless the power is turned on. Set the clock after you turn on the radio, start CD play, or play back a tape.

Using the Memory Preset Function

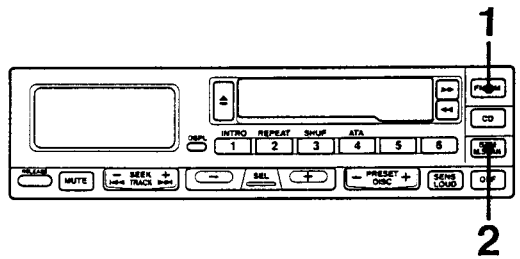

The clearest receiving stations are automatically searched and memorized on each band (FMI, FMII, FMIII and AM(MW, LW)). Up to 6 stations on each band can be stored on the preset number buttons 1 to 6 in order of frequency.

Memorizing the Stations Automatically
— BTM (Best Tuning Memory) Function

1 **Select the desired band.**

[FM/AM] XR-7040/7042/U110

[FM MW/LW] XR-7041

2 **Keep the BTM button pressed for more than two seconds.**

[BTM M.SCAN]

The BTM function

The BTM function searches all the receivable stations within the currently selected band and memorizes the ones in good receiving conditions in sequence from the lowest frequency.

How to memorize the stations on the preset number buttons

— When there is no preset number indicated on the display window: all the preset number buttons set in the currently selected band will be filled with the memories.

— When there is a preset number indicated on the display window: the unit will memorize the stations on the preset number buttons from the one currently being displayed. For example, when you choose FMII and preset number 3 is being displayed, the operation will start from preset number 3 on FMII, and stops at preset number 6 on FMIII.

Note
The receivable frequencies of FMI, FMII and FMIII are the same.

Checking in order, all the stations stored in the memory (Memory scan function)
Press the M.SCAN button lightly. The tuner will receive in order, all the stations in the memory for five seconds each. To cancel, press it lightly once more.

Note
There may be cases where there are not enough receivable stations due to the lack of stations in the vicinity or weak broadcasting signals. In such cases, the BTM operation may stop without all the buttons being occupied with memories.

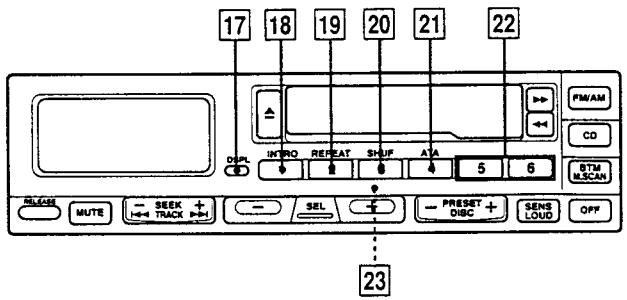

17 **DSPL (display change/time setting) button**
At each pressing, the button changes the display mode as follows:

During tape playback	"TAPE" indication → Clock → Frequency*
During CD play	Elapsed playing time → Disc number and track number → Clock
During radio reception	Frequency ↔ Clock

*only when the ATA is operating

	During tape playback	During CD play	During radio reception
18 INTRO button (INTRO 1)	–	Intro scan ⑲	Preset number buttons ⑬⑮
19 REPEAT button (REPEAT 2)	–	Repeat play ⑱	
20 SHUF button (SHUF 3)	–	Shuffle play ⑰	
21 ATA button (ATA 4)	**Automatic Tuner Activation** Press to make the tuner to turn on automatically every time you press the ◀◀ or ▶▶ button. To cancel, press it again.	–	
22 5 6	–	–	

23 **Reset button (located on the front side of the unit hidden by the front panel)**
Press this button when you use this unit for the first time, when you have changed the car battery or when the buttons of this unit do not function properly.

Detaching and Attaching the Front Panel

Detaching the Front Panel

Before detaching the front panel, be sure to press the OFF button first. Then press the RELEASE button to open up the front panel and detach the panel by pulling it towards you as illustrated.

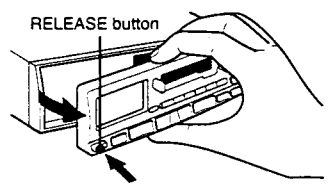

Be sure not to drop the panel when detaching it from the unit.

Attaching the Front Panel

Apply the right hand side of the front panel to the unit by attaching the part Ⓐ of the front panel to the part Ⓑ of the unit as illustrated and push until it clicks.

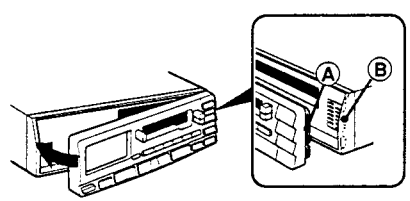

Do not press hard or give excessive pressure to the display window of the front panel.

Caution alarm (XR-7040/7041/7042)
If you turn the ignition key to the OFF position without removing the front panel, the caution alarm will be activated and a beep tone will be heard for a few seconds (only when the POWER SELECT switch is set to the ON position).

Notes
- Make sure that the front panel is the right way up when attaching it to the unit as it cannot be attached upside down.
- Do not press the front panel hard against the unit when attaching it to the unit. It can be easily attached by pressing it lightly against the unit.
- Never leave the detached front panel in your car if it is parked in direct sunlight as there could be a considerable rise in temperature inside the car.
- When you carry the front panel with you, put it in the supplied front panel case.
- The display window may become warm while the unit is being operated, however, this is not a sign of a malfunction.

www.manualscenter.com

Error displays (when the optional Sony CD changers are connected)

The following indication will flash for about five seconds.

Display	Cause	Solution
E-01	The disc magazine is not inserted in the CD changer.	Insert the disc magazine with discs into the CD changer.
E-02	No disc is inserted in the disc magazine.	Take out the disc magazine and insert the discs.
E-04	The disc is dirty.	Clean the disc.
	The disc is inserted upside down.	Insert the disc correctly.
E-99	The CD changer cannot be operated because of some trouble.	Press the reset button of the unit.

Using the Memory Preset Function

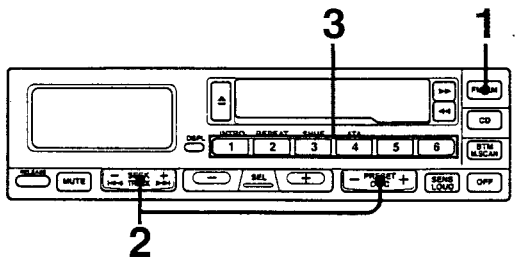

Up to 6 stations on each band (FMI, FMII, FMIII and AM (MW/LW)) can be stored in the memory in order of your choice.

Memorizing Only the Desired Stations

For example, to store a station on the preset number button 1.

1 **Select the desired band.**

FM/AM — XR-7040/7042/U110

FM MW/LW — XR-7041

2 **Tune in the station which you wish to store on the preset number button.**

– SEEK TRACK + or – PRESET DISC +

3 **Keep the preset number button pressed for more than two seconds.**

INTRO 1

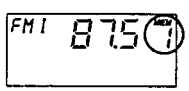

Repeat the same procedure to store other stations.

Each preset number button has only one memory for a band
The previously memorized station will be erased when you enter a new station of the same band on the same preset number button.

The number of the preset number button which you are pressing now comes on the display window. When the "MEM" indication comes on, the station will be stored in the memory and the operation is now completed. The "MEM" indication will turn off after a while.

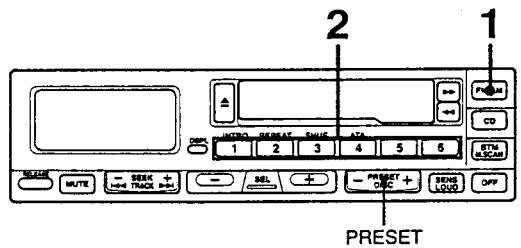

Receiving Stations Stored in the Memory

1 **Select the desired band.**

FM/AM — XR-7040/7042/U110

FM MW/LW — XR-7041

2 **Press the preset number button lightly on which the desired station is to be stored.**

INTRO 1 — 6

Notes
- There may be cases in which even the stations stored in the memory cannot be received due to weak signals in the vicinity of your car.
- If you keep pressing the preset number button for more than two seconds, the currently received station will be memorized. To receive the previously memorized station, make sure that the preset number button is pressed only lightly.

Receiving in Order the Stations Stored in the Memory — *Preset Search Function*

(Press lightly.)

The number will reverse in the following order:
6 ➡ 5 ➡ ... ➡ 2 ➡ 1 ➡ 6 ➡ 5 ➡ ...
(number of the preset number buttons)

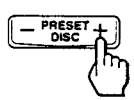

(Press lightly.)

The number will advance in the following order:
1 ➡ 2 ➡ ... ➡ 5 ➡ 6 ➡ 1 ➡ 2 ➡ ...
(number of the preset number buttons)

Connections

Caution

- This unit is designed for negative ground 12 V DC operation only.
- Before making connections, disconnect the ground terminal of the car battery to avoid short circuits.
- Connect the **red** power input lead only after all other leads are connected. And be sure to connect it to the positive 12 V power terminal which is energized when the ignition key is set to the accessory position.
- **Run all ground wires to a common ground point.**

Connexions

Précautions

- Cet appareil est conçu pour fonctionner sur courant continu de 12 V avec masse négative.
- Avant d'effectuer les connexions, débrancher la borne de terre de la batterie du véhicule pour éviter tout court-circuit.
- Brancher le fil d'entrée d'alimentation **rouge** en dernier. En outre, veiller à le raccorder à la borne d'alimentation de 12 V positive qui est énergétisée quand la clé de contact est sur la position accessoire.
- **Raccorder tous les fils de terre à un point de masse commun.**

except E model

When the Unit is Used in a Car with No Accessory Position on the Ignition Key

— POWER SELECT Switch

The illumination on the front panel is factory-set to be turned on even when the unit is not being played. However, this setting may cause some car battery wear **if the unit is used in a car with no accessory position on the ignition key.**
To avoid this battery wear when using the unit in such a car, **set the POWER SELECT switch located on the bottom of the unit to the OFF position, then press the reset button.** The illumination is reset to stay off while the unit is not being played.

Si l'appareil est utilisé dans une voiture dont la clé de contact n'a pas de position accessoire

— Interrupteur POWER SELECT

L'éclairage du panneau avant est réglé en usine de manière à s'allumer même quand l'appareil ne fonctionne pas. Cependant, ce réglage risque d'épuiser la batterie **si l'appareil est utilisé dans une voiture dont la clé de contact ne possède pas de position accessoire.** Pour éviter d'épuiser la batterie, **régler l'interrupteur POWER SELECT sur le fond de l'appareil sur OFF, puis appuyer sur la touche de réinitialisation sur le panneau avant.** L'éclairage est réinitialisé pour rester éteint quand l'appareil n'est pas utilisé.

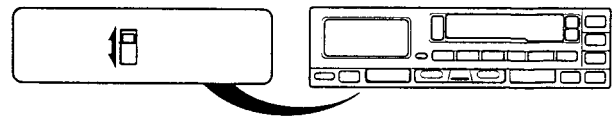

Change the position with a jeweler's screwdriver, etc.

Changer la position avec un tournevis de joaillier ou autre objet similaire.

Speaker Connection / Connexion des haut-parleurs

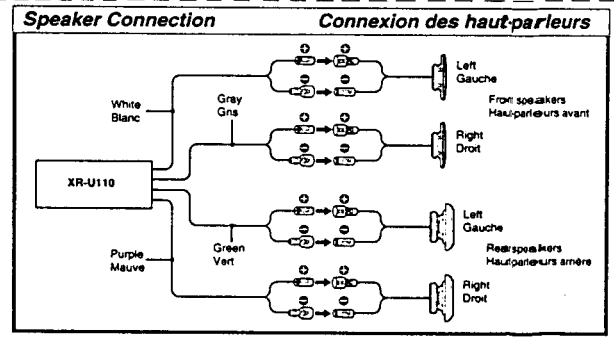

Notes on speaker connection

- Use speakers with an impedance of 3.2 to 8 ohms, and with adequate power handling capacities. Otherwise, the speakers may be damaged.
- Do not connect the terminals of the speaker system to the car chassis, and do not connect the terminals of the right speaker with those of the left speaker.
- Do not attempt to connect the speakers in parallel.
- Do not connect any active speakers (with built-in amplifiers) to the speaker terminals of the unit. Doing so may damage the active speakers. Therefore, be sure to connect passive speakers to these terminals.

Remarques sur la connexion des haut-parleurs

- Utiliser des haut-parleurs ayant une impédance de 3,2 à 8 ohms et une capacité adéquate sous peine de les endommager.
- Ne pas raccorder les bornes du système de haut-parleurs au châssis de la voiture et ne pas connecter les bornes du haut-parleur droit à celles du haut-parleur gauche.
- Ne pas tenter de raccorder les haut-parleurs en parallèle.
- Ne pas raccorder des haut-parleurs actifs (avec amplificateurs intégrés) aux bornes de haut-parleur de l'appareil sous peine de les endommager. Veiller à raccorder des haut-parleurs passifs à ces bornes.

Installation

Precautions

- Choose the mounting location carefully so that the unit will not interfere with the normal driving functions of the driver.
- Avoid installing the unit where it would be subject to high temperatures, such as from direct sunlight or hot air from the heater, or where it would be subject to dust, dirt or excessive vibration.
- Use only the supplied mounting hardware for a safe and secure installation.
- Be sure to detach the front panel before you start installing the unit.
- **Press the reset button after completing the connections.**

Mounting angle adjustment
Adjust the mounting angle to less than 20°.

How to Detach and Attach the Front Panel

To detach
Press the RELEASE button to open up the front panel, then pull it out.

To attach
Align the parts Ⓐ and Ⓑ, and push the front panel until it clicks.

To detach
Retrait

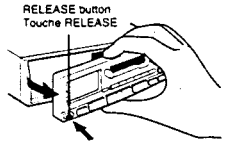

To attach
Pose

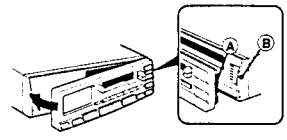

Mounting Example

Installation in the dashboard

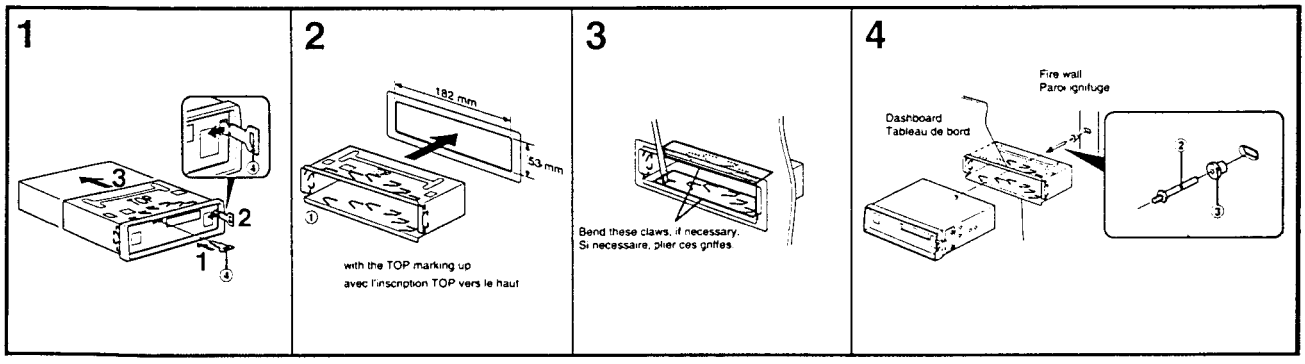

Mounting the Unit in a Japanese Car

You may not be able to install this unit in some makes of Japanese cars. In such a case, consult your nearest Sony dealer.

1 **Run a blade along the slits on the back of the front trim and cut it off the unit. At the same time, remove the side plate as well.**

Passer une lame le long des fentes à l'arrière de la bordure et la couper. Au même moment, enlever également la plaque latérale.

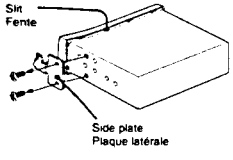

2 TOYOTA

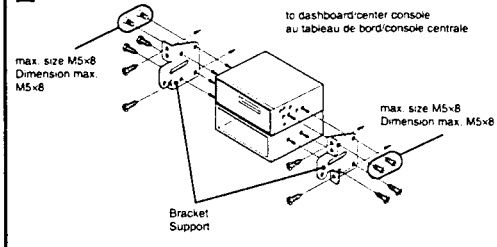

NISSAN

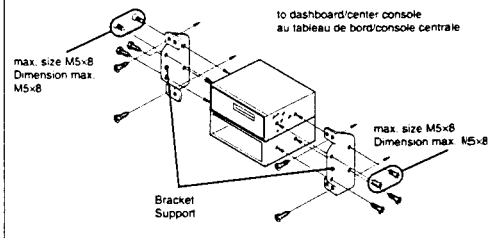

Note
Use the existing parts supplied to your car.

Remarque
Utiliser les pièces fournies avec la voiture.

Reset Button

When the installation and connections are over, be sure to press the reset button with a ball-point pen etc. The reset button is located under the cassette insertion door when the front panel is detached.

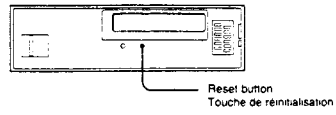

Installation

Précautions

- Choisir l'emplacement de montage avec soin de manière que l'appareil ne gêne pas les mouvements du conducteur.
- Eviter d'installer l'appareil en plein soleil, près d'une source de chaleur comme un chauffage ou dans un endroit exposé à la poussière, la saleté ou des vibrations excessives.
- Afin de garantir un montage sûr, utiliser uniquement le matériel de montage fourni.
- Veiller à détacher le panneau avant d'installer l'appareil.
- **Les connexions achevées, appuyer sur la touche de réinitialisation.**

Réglage de l'angle de montage
Ajuster l'inclinaison à un angle inférieur à 20°.

Retrait et pose du panneau avant

Retrait
Appuyer sur la touche RELEASE pour ouvrir le panneau avant, puis l'enlever.

Pose
Aligner les points Ⓐ et Ⓑ, puis pousser l'appareil jusqu'au déclic.

Exemple de montage

Installation dans le tableau de bord

Installation de l'appareil dans une voiture japonaise

Si l'appareil ne peut pas être installé dans une voiture japonaise, consulter le revendeur Sony le plus proche.

Touche de réinitialisation

Quand l'installation et les connexions sont terminées, appuyer sur la touche de réinitialisation avec un stylo bille ou autre objet pointu. La touche de réinitialisation est située sous le volet d'insertion de cassette quand le panneau avant est enlevé.

SECTION 2
DISASSEMBLY

Note : Follow the disassembly procedure in the numerical order given.

2-1. COVER, FRONT PANEL ASSEMBLY

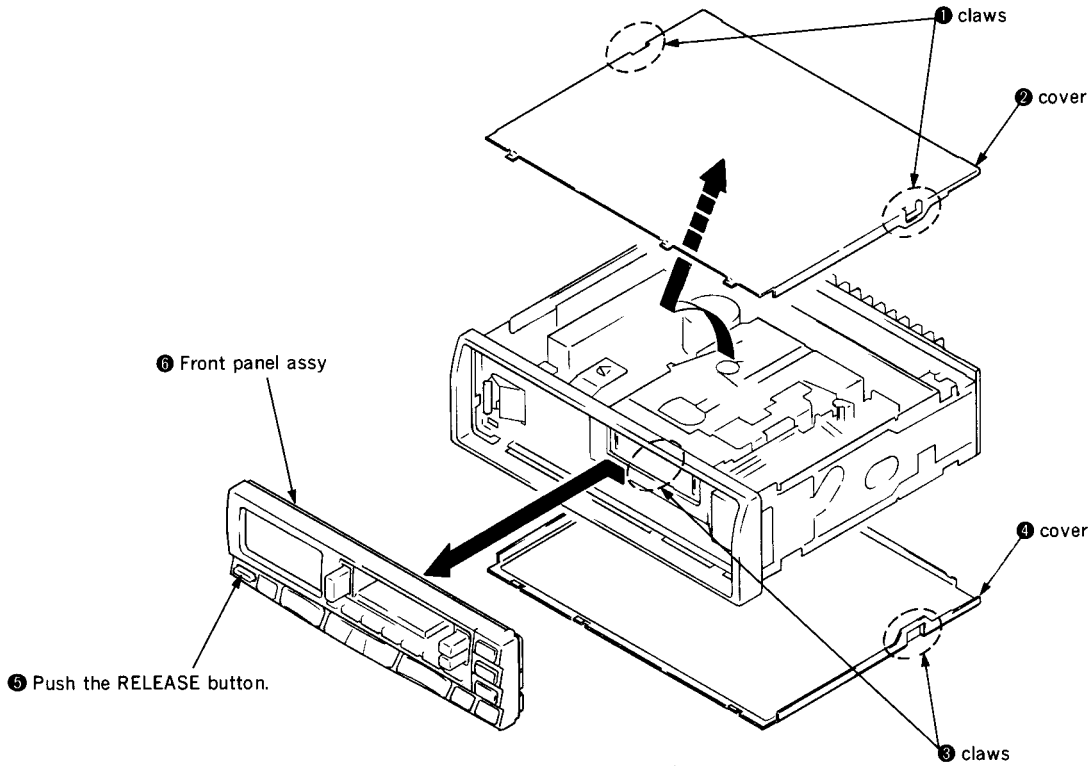

2-2. MECHANISM DECK BLOCK

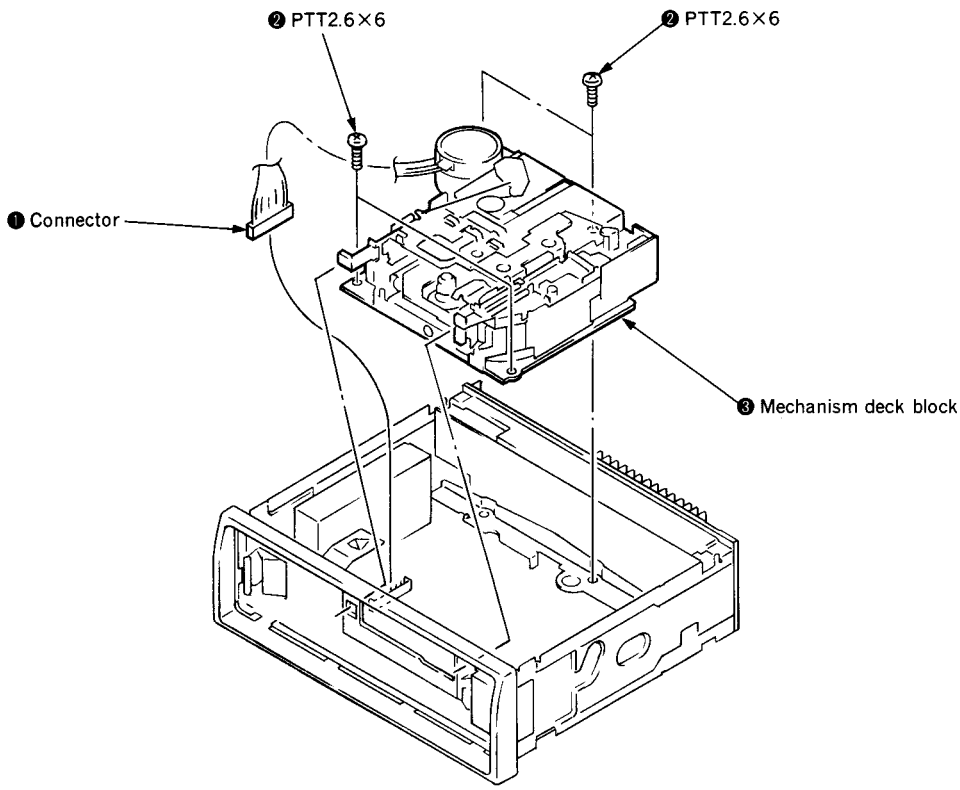

Connection Diagram / Schéma de connexion

Example 1
Exemple 1

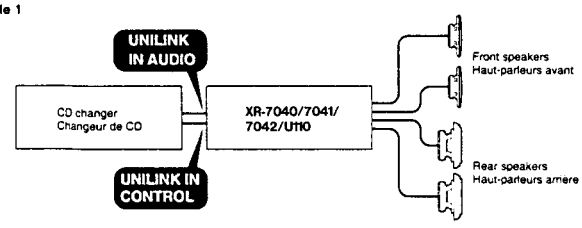

Example 2
Exemple 2

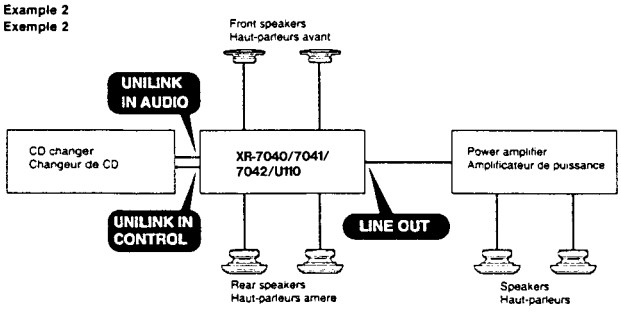

Example 3
Exemple 3

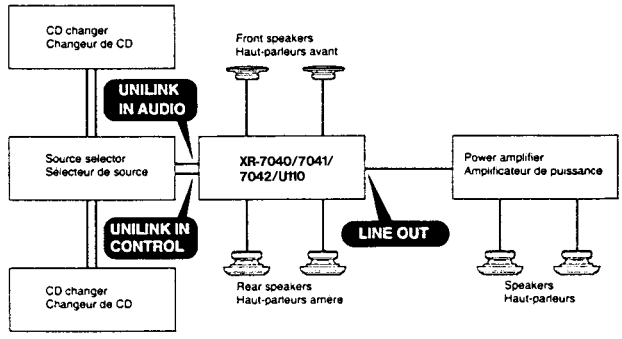

If you connect two or more CD changers, the source selector XA-U20 or XA-U40 (not supplied) is required

Si plusieurs changeurs de CD sont utilisés, le sélecteur de source XA-U20 ou XA-U40 (non fourni) est nécessaire.

Connections of Example 2 / Connexions de l'exemple 2

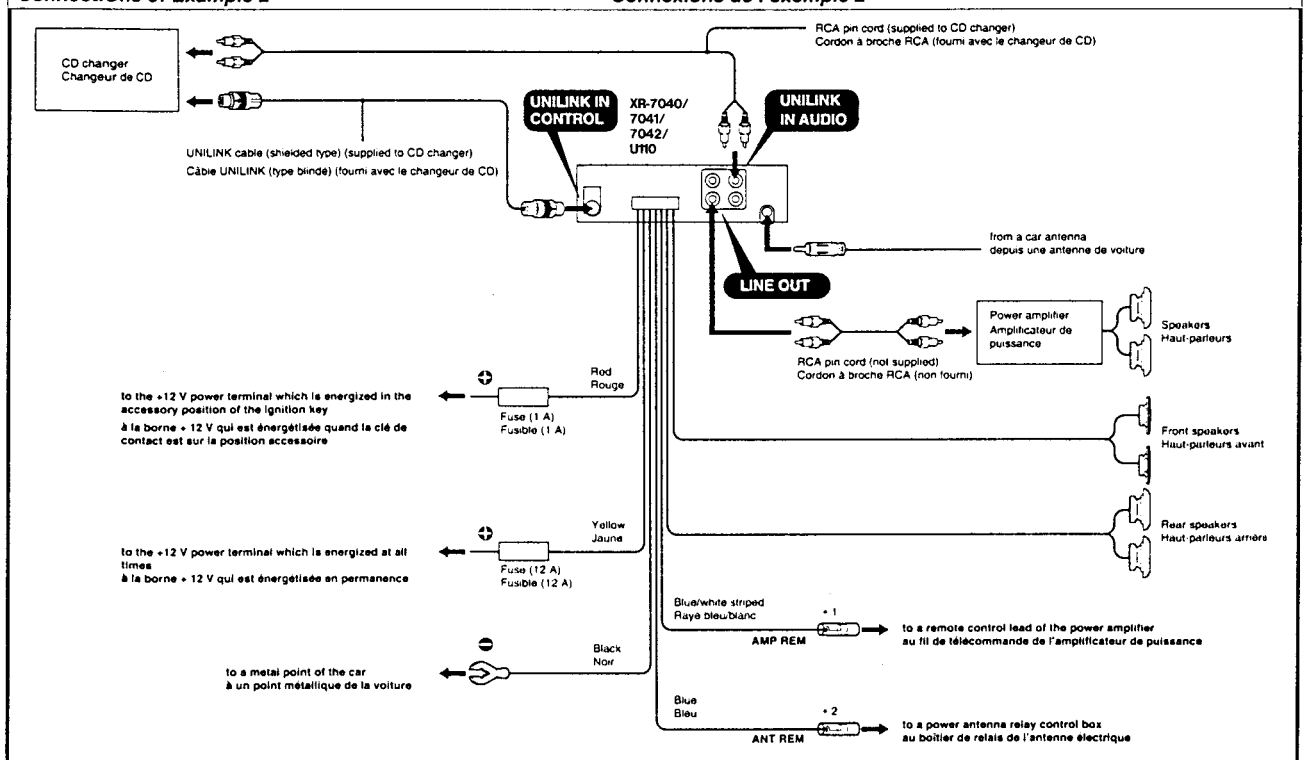

Notes on the control leads
- The power antenna control lead (blue) supplies +12 V DC when you turn on the unit.
- A power antenna without relay control box cannot be used with this unit.

Remarques sur les fils de contrôle
- Le fil de contrôle de l'antenne électrique (bleu) fournit un courant continu de 12 V quand le tuner est allumé
- Une antenne électrique sans boîtier de relais ne peut pas être utilisée avec cet appareil.

• 1 Max. supply current 0.3 A
Courant max. fourni 0,3 A

• 2 Max. supply current 0.1 A
Courant max. fourni 0,1 A

SECTION 3
MECHANICAL ADJUSTMENTS

PRECAUTION

1. Wipe the following components with an absorbent cotton cloth moistened with alcohol before aejustment:
   PB head — Pinch roller
   Idler — Rubber belt
   Capstan
2. Demagnetize the PB head using a head demagnetizer.
3. Be careful not to use a magnetized screwdriver.
4. After the adjustment is completed, lock the adjustment parts using screws.
5. Unless otherwise specified, make adjustments at the specified voltage (14.4V).

Torque Measurement

Mode	Torque Meter	Meter Reading
FWD	CQ-102C	40—75g•cm (0.56—1.04oz•inch)
FWD Back Tension		1—5g•cm (0.01—0.06oz•inch)
REV	CQ-102RC	40—75g•cm (0.56—1.04oz•inch)
REV Back Tension		1—5g•cm (0.01—0.06oz•inch)
FF, REW	CQ-201B	45—150g•cm (0.63—2.08oz•inch)

SECTION 4
ELECTRICAL ADJUSTMENTS

DECK SECTION

1. The adjustments should be performed in the order given in this service manual.
2. The adjustments should be performed for both L-CH and R-CH.

Test Tape

Type	Signal	Used for
P-4-A063	6.3kHz, −10dB	head azimuth adjustment
WS-48A	3kHz, 0dB	tape speed adjustment

PB Head Azimuth Adjustment

Procedure:

1. Mode: playback

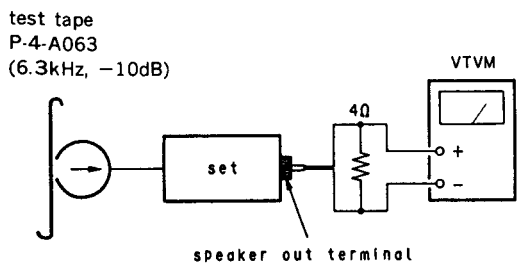

2. Turn the screw and check the output peak value. Adjust the screw so that the peak value in channels L and R coincides within 2dB.

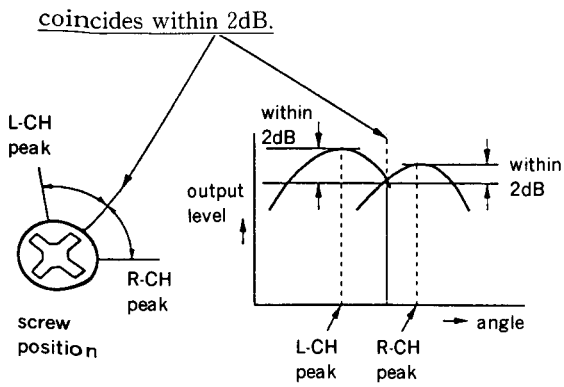

3. Check the phase in the PB mode.

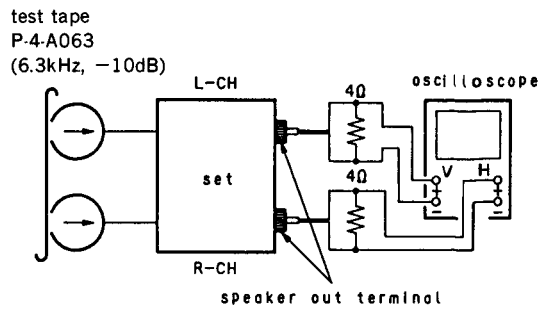

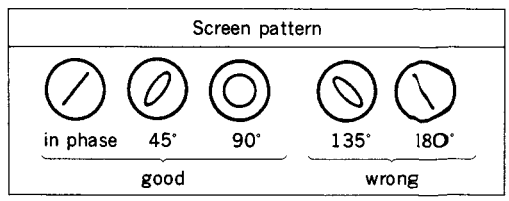

4. Repeat the above adjustment for the PB REV mode.

Adjustment Location:

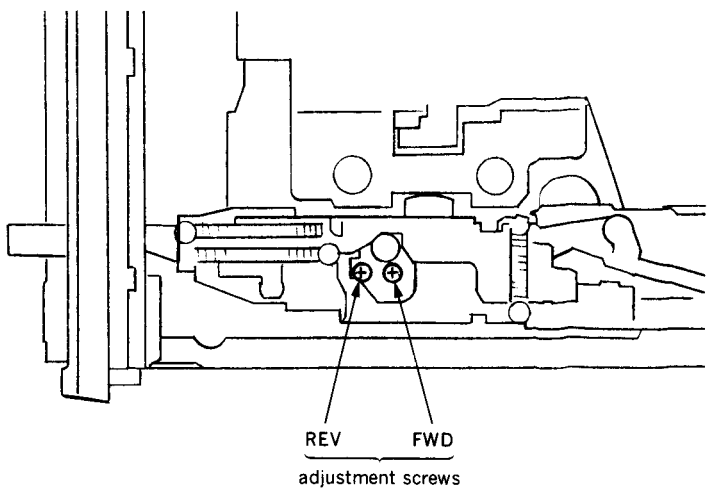

www.manualscenter.com

2-3. RESET BOARD

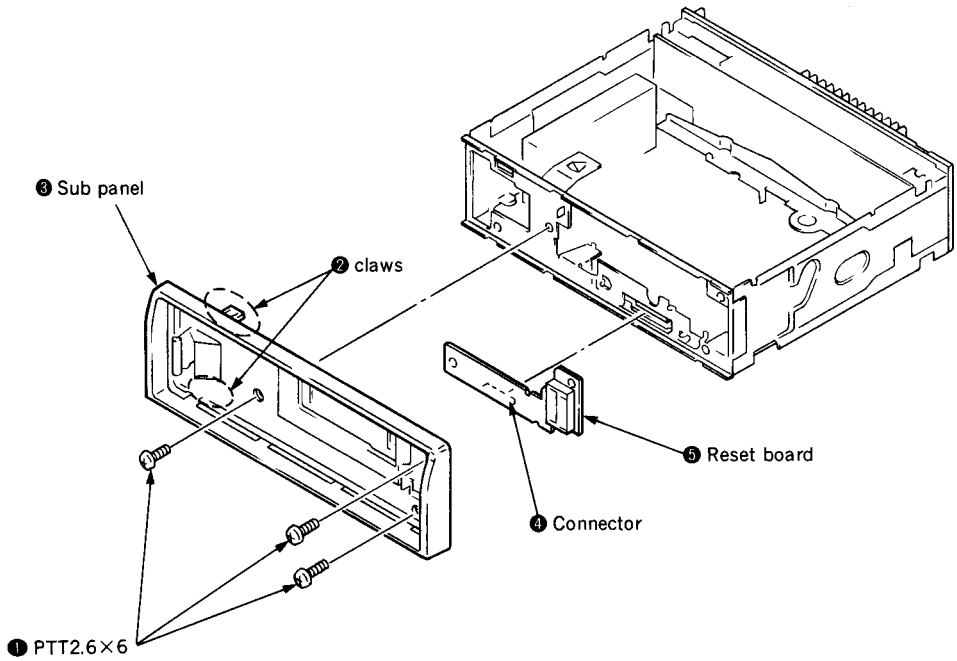

2-4. MAIN BOARD

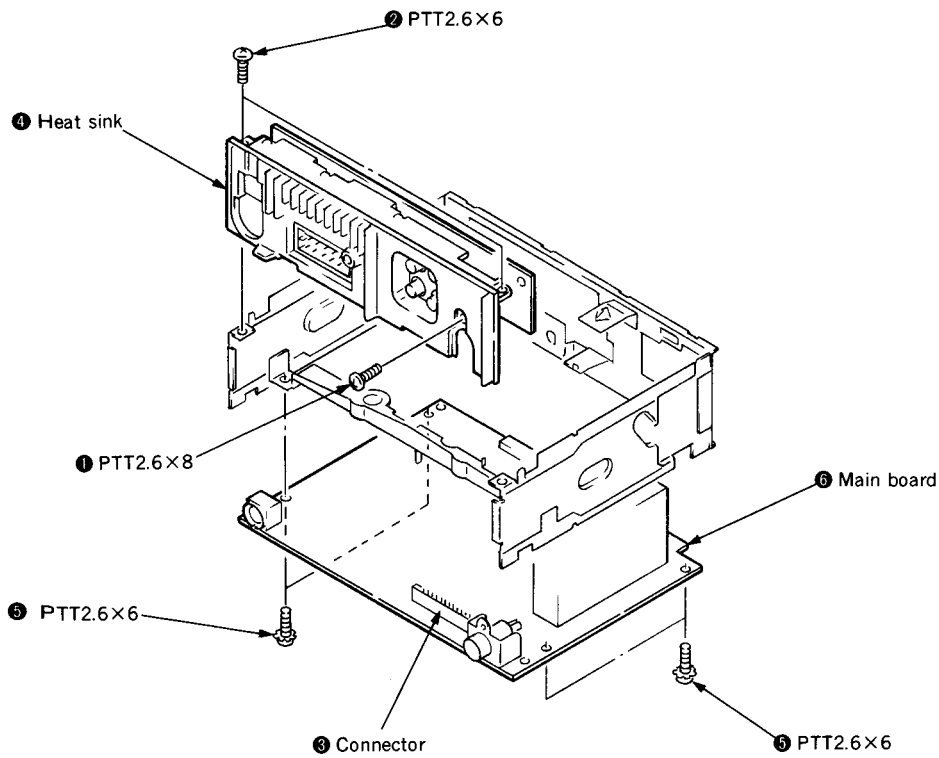

Tape Speed Adjustment

Setting :

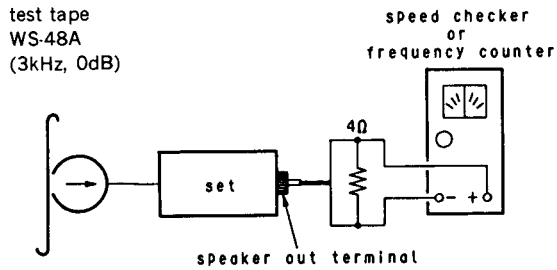

Procedure :

1. Put the set into the FWD PB mode.
2. Adjust adjustment resistor for inside capstan motor so that the reading on the speed checker or frequency counter becomes in specification.

Specification : Constant speed

Speed checker	Frequency counter
−1.5 to +2.5%	2,955 to 3,075Hz

Adjustment Location :

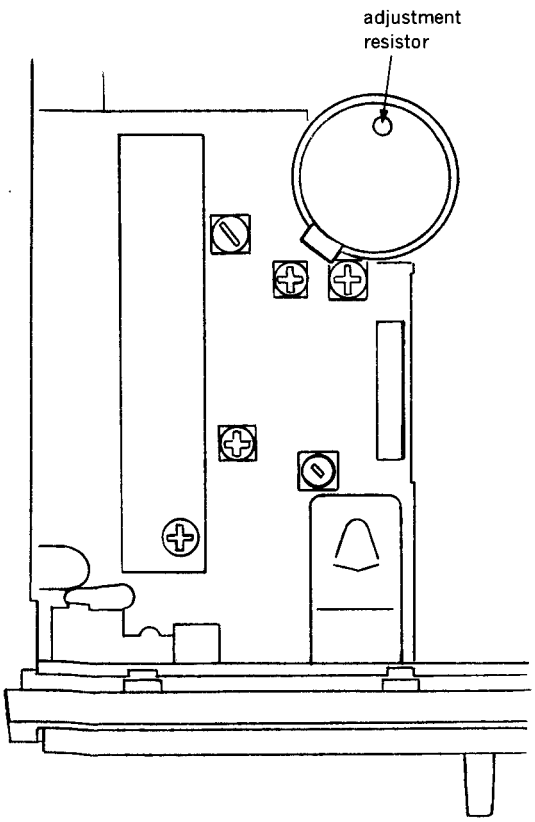

TUNER SECTION

Cautions during repair
When the front end is defective, replace it by a new one because its internal block is difficult to repair.

FM Center Adjustment

Setting :

Band : FM

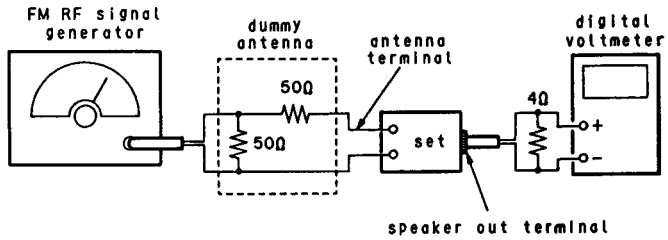

Carrier frequency : 98MHz (7040, 7041, 7042)
97.9MHz (U110)
Output level : 60dB (1mV)
Mode : mono
Modulation : 1kHz, 75kHz deviation (100%)

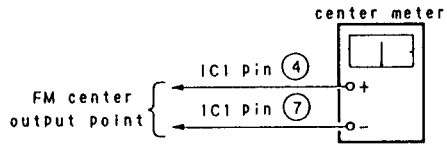

Procedure :

1. Adjust T1 so that the reading on the center meter becomes in 0±30mV.
2. Output an Fcenter 60dB signal output from FM rf signal generator so that the speaker output terminal is 0dBs.
3. Change the FM rf signal generator frequency and check the deviation of the frequency on + side and − side when the speaker output terminal drops 3dB.
4. Re-adjust T1 when the difference deviation of the frequency does more than 7kHz.

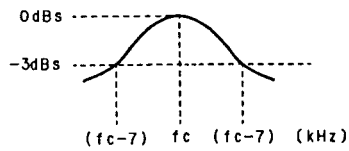

Adjustment Location : main board

FM Stereo Separation Adjustment

Setting :

Band : FM

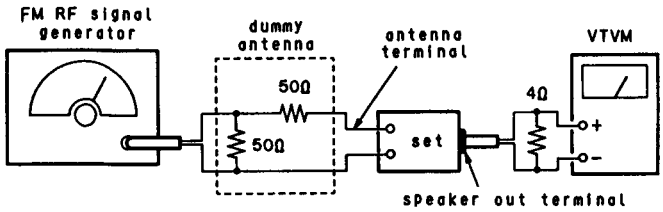

Carrier frequency : 98MHz (7040, 7041, 7042)
97.9MHz (U110)
Output level : 70dB (3.2mV)
Mode : stereo
Modulation : main channel 1kHz, 33.75kHz deviation (45%)
: sub channel 1kHz, 33.75kHz deviation (45%)
: pilot signal 19kHz, 7.5kHz deviation (10%)

Procedure :

FM stereo signal generator output channel	VTVM connection	VTVM reading (dB)
L-CH	L-CH	Ⓐ
R-CH	L-CH	Ⓑ Adjust RV2 for minimum reading.
R-CH	R-CH	Ⓒ
L-CH	R-CH	Ⓓ Adjust RV2 for minimum reading.

L-CH stereo separation : Ⓐ−Ⓑ
R-CH stereo separation : Ⓒ−Ⓓ
The separations of both channels should be equal.
Adjust so that separation is maximized.
(separation>26dB)

Adjustment Location : main board

FM Auto Scan/Stop Level Adjustment

Setting :

Band : FM

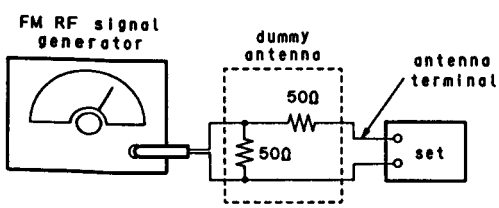

Carrier frequency : 98MHz (7040, 7041, 7042)
97.9MHz (U110)
Output level : 25dB (17.8μV)
Mode : mono
Modulation : no modulation

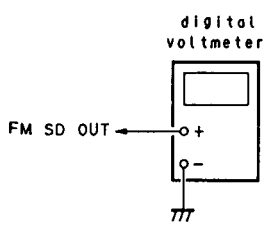

Procedure :

1. Adjust RV1 so that the reading on the digital voltmeter changes point from minimum to maximum. (approx. 0.6V)
2. Confirm that the set stops auto-scanning with FM rf signal generator output level set at 25±2dB.

Adjustment Location : main board

AM Auto Scan/Stop Level Adjustment

Note) Be sure to perform this adjustment after "FM Auto Scan/Stop Level Adjustment".

Setting :

Band : AM

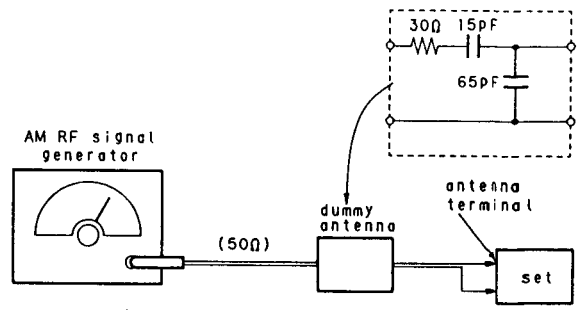

Carrier frequency : 999kHz (7040, 7041, 7042)
1,000kHz (U110)
Output level : 30dB (31.6μV)
Modulation : no modulation

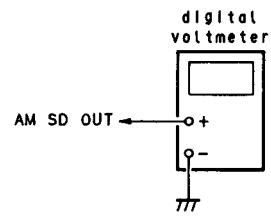

Procedure :

Note) AM mute signal OFF. (Add +5V through 47kΩ between pins ⑮ and ⑲ of TU1.)

1. Adjust adjustment resistor for inside TU1 (AM tuner unit) so that the reading on the digital voltmeter changes point from minimum to maximum. (approx. 0.6V)
2. Confirm that the set stops auto-scanning with AM rf signal generator output level set at 30±2dB.

Adjustment Location : main board

SDK Adjustment (XR-7042 only)

Setting :

Band : SDK (Traffic Announcement)

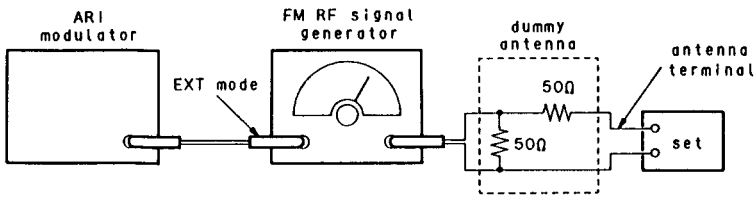

ARI modulation
SK : 1.3%
DK : 30%
BK : 60%

Carrier frequency : 98MHz
Output level : 60dB (1mV)
Mode : mono
Modulation : 1kHz, 7.5kHz deviation

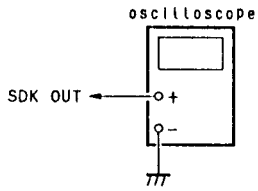

Procedure :

1. Adjust L61 and RV501 so that the output waveform become the maximum.

Adjustment Location : main board (component side)

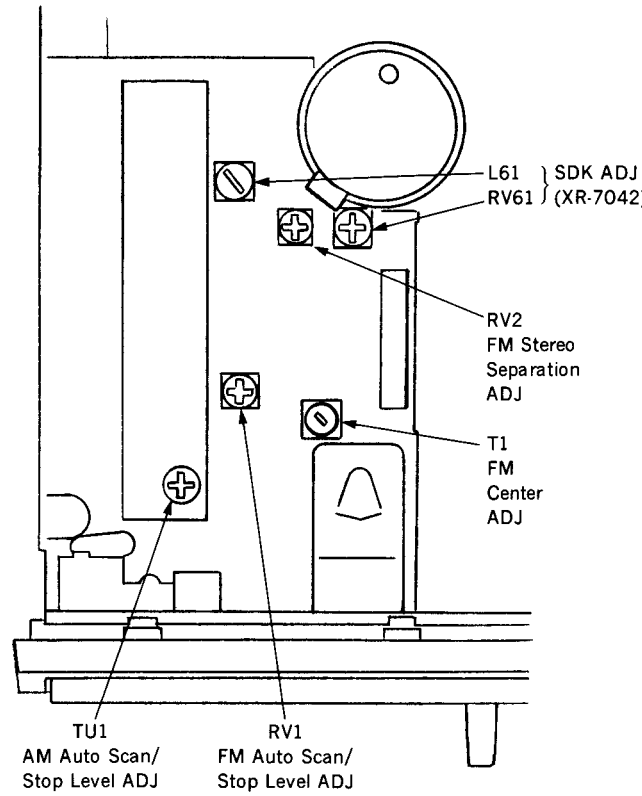

Adjustment Location : main board (conductor side)

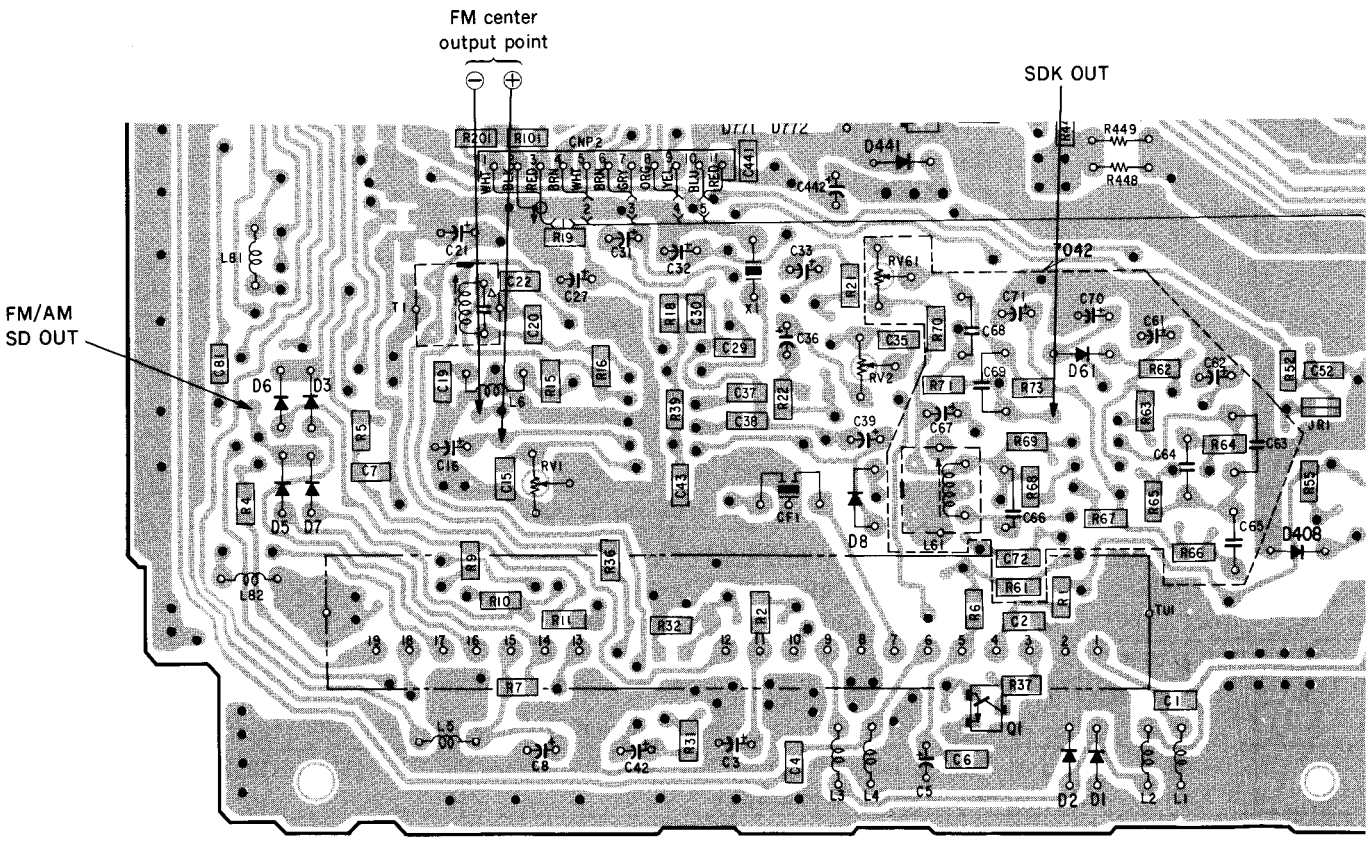

www.manualscenter.com

SECTION 5
DIAGRAMS

5-1. PIN DESCRIPTION

• IC701 μPD75518GF-096-3B9

Pin No.	Pin Name	I/O	Description
1	K0	—	The value AD converted through the key input pin is used to determine that key.
2	V. REF	—	Pin to supply power for AD conversion.
3, 4	VDD	—	Microcomputer power pin.
5	KEY-ACT	O	KEY ACTIVE output pin Pin used to control AV_{REF} power for key A/D conversion input. This pin is set HIGH to supply AV_{REF} power in order to enable any KEY input.
6	P-ON	O	POWER ON/OFF control This pin allows ON/OFF control of the system power. HIGH output sets POW-ON while LOW output sets POW-OFF. Also, POW-ON sets illumination other than function key illumination ON.
7	ILL-ON	O	Illumination control output pin Output pin used for function key illumination control. HIGH to turn illumination ON (HIGH output). When P-SEL (POWER-SELECT) (pin ⑮) is set ON, ACC-ON sets illumination ON while ACC-OFF sets illumination OFF (LOW output).
8	COLOR	O (I)	COLOR control output pin Illumination color select pin. GREEN=HIGH output, AMBER=LOW output. This color is initialized to AMBER. Either 〈SEL〉+1 keys or 〈ILL〉 key is used to select color. Note that when reset, this pin is read as output and HIGH output makes 〈SEL〉+1 keys invalid.
9	MUTE	O	AUDIO MUTE output pin This provides HIGH output in MUTE mode and sets the electronic volume to −∞.
10	AUX-MUTE	—	Not used.
11	DOLBY-ON	—	Not used.
12	—	—	Not used.
13	ANT-REM	—	Not used.
14	AMS-PL	—	Not used.
15	MD-POWER	O	TAPE (MD) POWER control output pin This pin allows power control of capstan motor (CM), KEY-OFF PLUNGER. This output is set HIGH to turn TAPE ON.
16	LCD-INH	O	Pin for inhibit output to LCD-driver IC This is the serial interface with LCD driver IC, LC7582 and connected with No. pin ㊼ of the LC7582. HIGH output causes all LCD's to be turned OFF. To aboid incorrect display during POWER-ON, this output is precessed with the fig. 1 timing: (See page 21.)
17	—	—	Not used. Connect to GND.
18	LCD-DATA	O	Pin for data output to LCD-driver IC
19	LCD-CLK	O	Pin for clock output to LCD-driver IC
20	LCD-CE	O	Pin for chip enable output to LCD-driver IC
21	VOL-CE	O	Pin for chip enable output to electronic volume IC
22	PLL-CE	O	Pin for chip enable output to PLL IC
23	CLK	O	Pin for clock output to PLL IC and electronic volume IC
24	DATA-OUT	O	Pin for data output to PLL IC and electronic volume IC
25	PLL DATA-IN	I	Pin for data input to PLL IC
26	MTL	O	METAL select output pin Tape METAL output pin which outputs HIGH signal when METAL tape is selected.
27	ILL	I	Used for initialization of illumination color when the CDX-U30. Set HIGH to select AMBER while LOW to select GREEN.

Pin No.	Pin Name	I/O	Description
28	CA-ALARM	I	Used for initialization of CAUSION ALARM $\overline{\text{available}}$/not available setting. CAUSION ALARM available=LOW CAUSION ALARM not available=HIGH
29—32	—	—	Not used.
33	GND	—	GND
34	$\overline{\text{PACK-IN}}$	I	PACK IN input pin Tape insertion in the cassette is detected. This pin is set LOW when tape is packed in the cassette.
35	$\overline{\text{FF/REW}}$	I	FF/REW MUTE REQUEST pin This pin is set LOW when tape is in the FF or REW mode. This input is detected to trigger AUDIO-MUTE. *Note: Even when changing the tape direction (AUTO REVERSE), this pin is set low. To determine to switch from FF/REW to DIRECTION-CHANGE is controlled by time. Refer to fig. 2. (See page 21.)
36	N/$\overline{\text{R}}$	I	NORMAL/$\overline{\text{REVERSE}}$ input pin Pin used to detect the direction of tape run. NORMAL direction=HIGH REVERSE direction=LOW
37	—	—	Not used. Connect to GND.
38—41	—	—	Not used.
42	$\overline{\text{S. RESET}}$	O	BUS INTERFACE SYSTEM RESET output pin Pin for SYSTEM RESET output to UNILINK. When 20msec has elapsed after RESET, LOW output is supplied for 50 (40 to 60) msec.
43	$\overline{\text{BUS-ON}}$	O	BUS INTERFACE BUS ON output pin This pin provides BUS ON output to UNILINK.
44	CLOCK-OUT	O	BUS INTERFACE CLK output pin This pin provides data clock output to UNILINK.
45	BEEP	O	BEEP sound output pin For the BEEP sound and audible alarm activated when a key is accepted, a square wave of approx. 2kHz is output for 40msec. A square wave of approx. 1kHz is output for 40msec when that key is continuously pressed and hold down 2sec. At end of auto memory (BTM) and memory scan, approx. 2kHz is output for 40msec and at an interval of 150msec, approx. 2kHz is output for 40msec.
46	$\overline{\text{ACC-CHECK}}$	I	Accessory power detection pin LOW input causes the ACC to be turned ON.
47	$\overline{\text{KEY-ACK}}$	I	KEY-ACKNOWLEDGE input pin Input pin for acknowledge signal used to accept any of the function keys such as FM/AM (FM WW/LW), CD, TAPE and TV from the POWER-OFF mode and to accept the EJECT (tape) key.
48, 49	—	—	Not used. Connect to GND.
50	DATA-IN	I	BUS INTERFACE data input pin
51	DATA-OUT	O	BUS INTERFACE data output pin
52	CLOCK-IN	I	BUS INTERFACE clock input pin
53	BU-CHECK	I	BACK UP detection input pin
54	GND	—	GND
55	XT1	—	Sub system clock (for clock) This is connected with 32.768kHz crystal oscillator.
56	XT2	—	
57	IC	—	Not used. Connect to GND.
58	X1	—	Main system clock This is connected with 6MHz ceramic oscillator.
59	X2	—	
60	$\overline{\text{RESET}}$	—	Microcomputer reset pin

Pin No.	Pin Name	I/O	Description
61	—	—	Not used. Connect to GND.
62	DK	I	DK input pin
63	SK	I	SK input pin
64	SD-OUT	O	SD output pin This pin provides "LOW" level output during AM reception.
65	SD-IN	I	SD input pin This is used to determine the stop level of SEEK, AUTO-MEMORY, SCAN and other operations.
66	$\overline{\text{TEL-MUTE}}$	I	TEL-MUTE input pin "LOW" level to activate TEL-MUTE function. The electronic volume is used to attenuate audio signal by 20dB.
67	$\overline{\text{STEREO-IN}}$	I	STEREO input pin "LOW" level for STEREO. When this input is changed, the display data will be sent. In forced monaural output mode, this pin is set to "LOW" level and therefore the display data will be always sent as "0".
68	$\overline{\text{NSW}}$	I	Nose attachment detection input pin LOW : Nose attached (Nose available) HIGH : Nose removed (Nose not available)
69	$\overline{\text{AM-ON}}$	O	AM power control output pin In AM (MW, LW) mode, this pin provides LOW output (for both PLAYING and BEHIND). In any other mode, this provides HIGH output (high impedance due to Nch open drain output). To switch between MW and LW, OUT3 (pin ③) of PLL-IC, LC7216 is used.
70	$\overline{\text{FM-ON}}$	O	FM power control output pin In FM mode, this pin provides LOW output (for both PLAYING and BEHIND). In any other mode, this provides HIGH output (high impedance due to Nch open drain output).
71	SIG1	O	Audio source select control output pin The following outputs are provided :
72	SIG0	O	

	TAPE	TUNER	AUX (CD)
0	1	0	1
1	0	0	1

Pin No.	Pin Name	I/O	Description
73	VSS-REF	—	GND pin for A/D conversion.
74	T-OPTION	I	Input pin for initialization of MTL, DOLBY and AMS available/not available When reset, this pin is read to initialize tape METAL, DOLBY and AMS function available/not abailable. LOW : METAL, DOLBY and AMS function abailable HIGH : METAL, DOLBY and AMS function not abailable
75	P-SEL	I	POWER-SELECT initialization input pin When reset, this pin is read to initialize POWER-SELECT. LOW : With BACKUP, ACC, NSW=ON, this input sets function key illumination ON together with clock display when POWER-OFF is set. Refer to ILL-ON (pin ⑦).
76	D-S1	—	Initialization-for-destination pin When reset, after become stabilized power, use on AD exchange is read to initialization-for-destination.
77	D-S0	—	
78	AM-SM	—	Pin to input the AM band's signal meter (electric field strength) through A/D conversion. Used with BTM (best tuning memory) selected.
79	FM-SM	—	Pin to input the FM band's signal meter (electric field strength) through A/D conversion. Used with BTM (best tuning memory) selected.
80	K1	—	The value AD converted through the key input pin is used to determine that key.

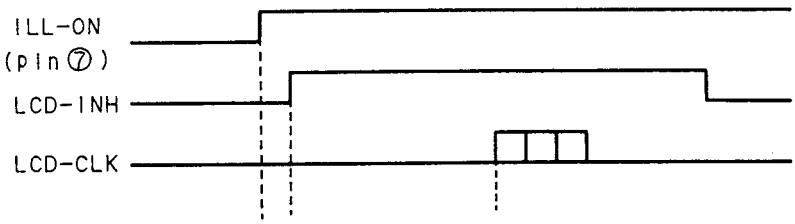

Fig. 1

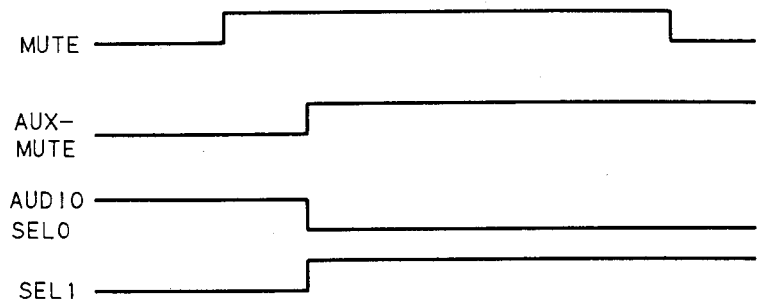

Fig. 2

• IC81 LC7216

Pin No.	Pin Name	I/O	Description
1	XIN	I	Crystal oscillator connection (7.2MHz)
2	CE	—	Chip enable input pin
3	D-IN	—	Data input pin
4	CL	—	Clock input pin
5	D-OUT	—	Data output pin
6	IN0	—	Not used.
7	IN1	—	Not used.
8	LCL	O	LOCAL/$\overline{DX}$ select output pin
9	LW	O	"H" level output in MW band mode.
10	MONO	O	Forced monaural output pin This pin provides "L" level output in forced monaural mode.
11	OUT4	—	Not used.
12	SEEK	O	SEEK output pin This pin provides HIGH output during SEEK, BTM, AF operation and network operation.
13	AMIF	—	General-purpose counter frequency measurement signal input pin.
14	FMIF	—	General-purpose counter frequency measurement signal input pin.
15	AMOSC	—	AM local station oscillation signal input
16	FMOSC	—	FM local station oscillation signal input
17	VDD	—	Power pin
18	PD	—	Charge pump output pin
19	GND	—	GND
20	X2	O	Crystal oscillator connection (7.2MHz)

www.manualscenter.com

5-2. BLOCK DIAGRAM

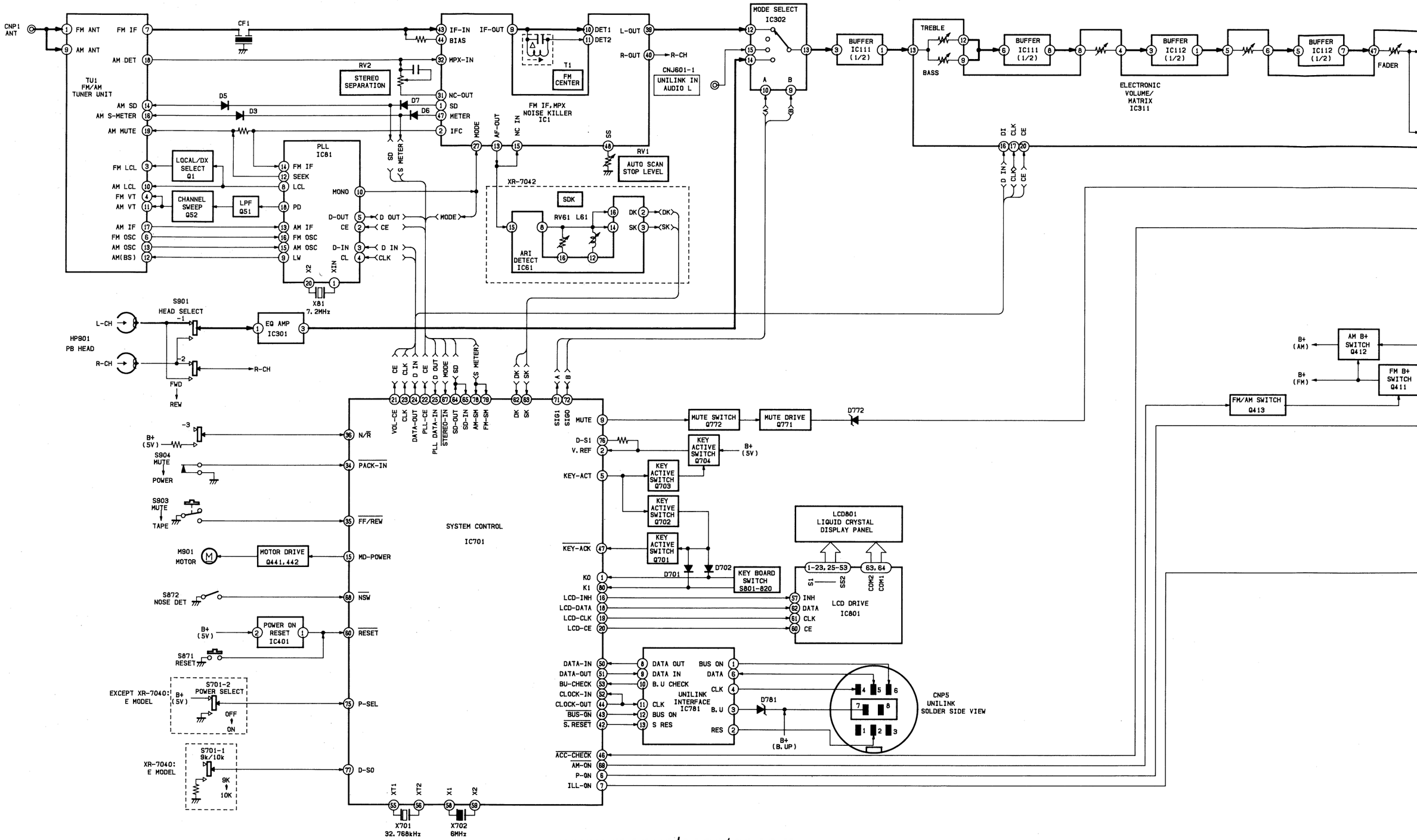

www.manualscenter.com

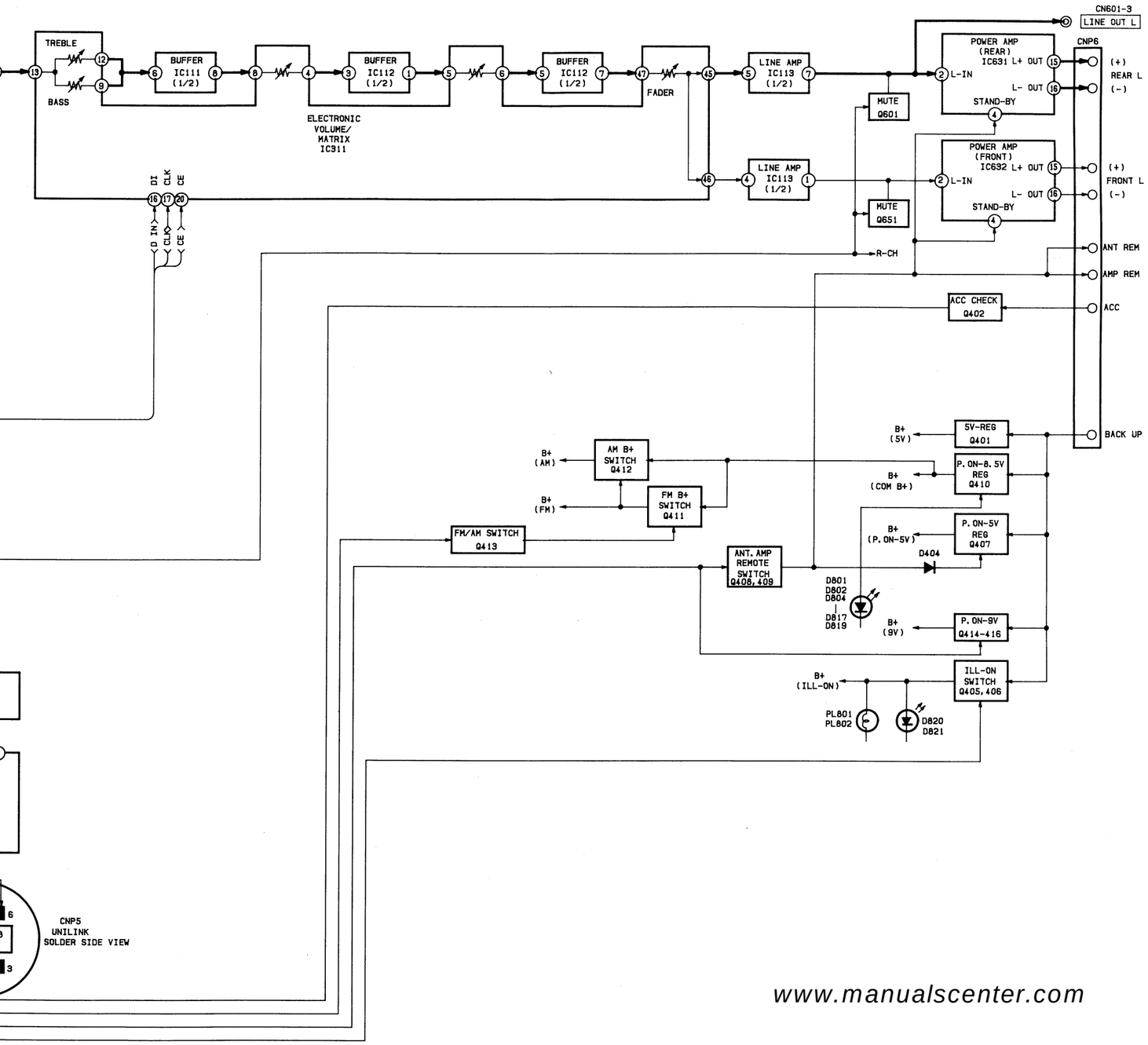

www.manualscenter.com

5-3. SEMICONDUCTOR LEAD LAYOUTS

BA328F
RC4558DR-A

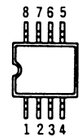

(TOP VIEW)

BU4052BF

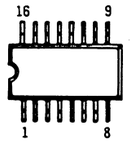

(TOP VIEW)

LC7216M
TDA1579T

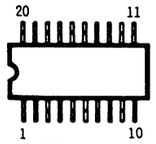

(TOP VIEW)

LC7537AN

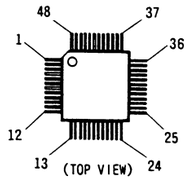

(TOP VIEW)

LC7582

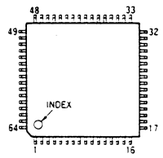

(TOP VIEW)

MM1175XF-T1

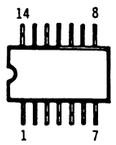

(TOP VIEW)

RH5VA40AA

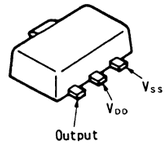

TA2027F

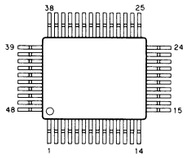

TA8215H

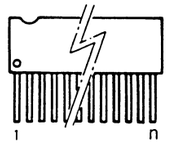

μPD75518GF-096-3B9

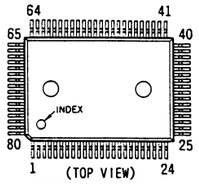

DTC314TKH04
RN1402
RN1411-TE85L
RN2402
2SA1162-G
2SC2412KLN-E
2SC2712-YG

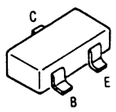

2SA1150

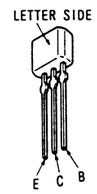

2SB1115A
2SD1664-QR

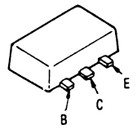

2SB1202FAST

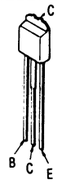

2SD1802FA-S

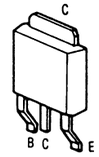

DSA3A4

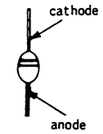

AY1101W-88

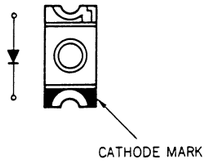

RD10ES-B2
RD4.3ES-B2

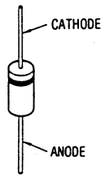

RD3.6ES-B2
RD5.1ES-B2
RD5.6ES-B2
RD6.2ES-B2
RD7.5ES-B2
RD9.1ES-B2
1SS119
11ES2

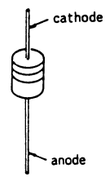

• Semiconductor Location

Ref. No.	Location	Ref. No.	Location
D1	K-21	IC1	I-12
D2	K-20	IC61	I-10
D3	I-17	IC81	G-14
D5	J-16	IC111	F-11
D6	I-16	IC112	F-10
D7	J-16	IC113	E-9
D8	J-19	IC211	D-11
D61	I-21	IC212	D-10
D301	F-18	IC213	D-9
D311	G-21	IC301	G-13
D312	C-21	IC302	E-12
D401	D-22	IC311	E-10
D402	E-23	IC401	C-8
D403	E-23	IC631	F-4
D404	H-23	IC632	B-4
D406	D-22	IC701	B-12
D407	E-22	IC781	B-9
D408	J-22	IC801	I-35
D441	H-19		
D681	I-6	Q1	K-20
D682	A-5	Q51	I-9
D701	C-17	Q52	I-8
D702	C-17	Q401	D-22
D703	D-17	Q402	D-7
D704	D-17	Q405	D-5
D705	D-17	Q406	D-8
D706	D-17	Q407	E-23
D707	C-16	Q408	I-7
D708	C-16	Q409	I-23
D771	G-19	Q410	F-7
D772	G-19	Q411	E-17
D781	B-22	Q412	D-14
D782	B-22	Q413	D-14
D783	B-23	Q414	I-8
D801	A-32	Q415	H-8
D802	A-33	Q416	H-9
D804	C-33	Q441	G-10
D805	B-32	Q442	G-20
D806	B-33	Q601	K-3
D807	C-32	Q611	K-2
D808	D-32	Q651	K-2
D809	D-32	Q661	K-2
D810	E-32	Q701	C-17
D811	F-33	Q702	C-17
D812	E-33	Q703	C-17
D813	F-32	Q704	C-13
D814	G-32	Q771	G-19
D815	G-33	Q772	G-18
D816	I-32		
D817	I-32	THP682	J-5
D819	H-32		
D820	A-31		
D821	A-31		
D831	G-34		
D891	G-35		
D901	D-22		

Note:
- ○—— : parts extracted from the component side.
- ● : Through hole.

5-4. PRINTED WIRING BOARDS • Refer to page 25 for Semiconductor Lead Layouts.

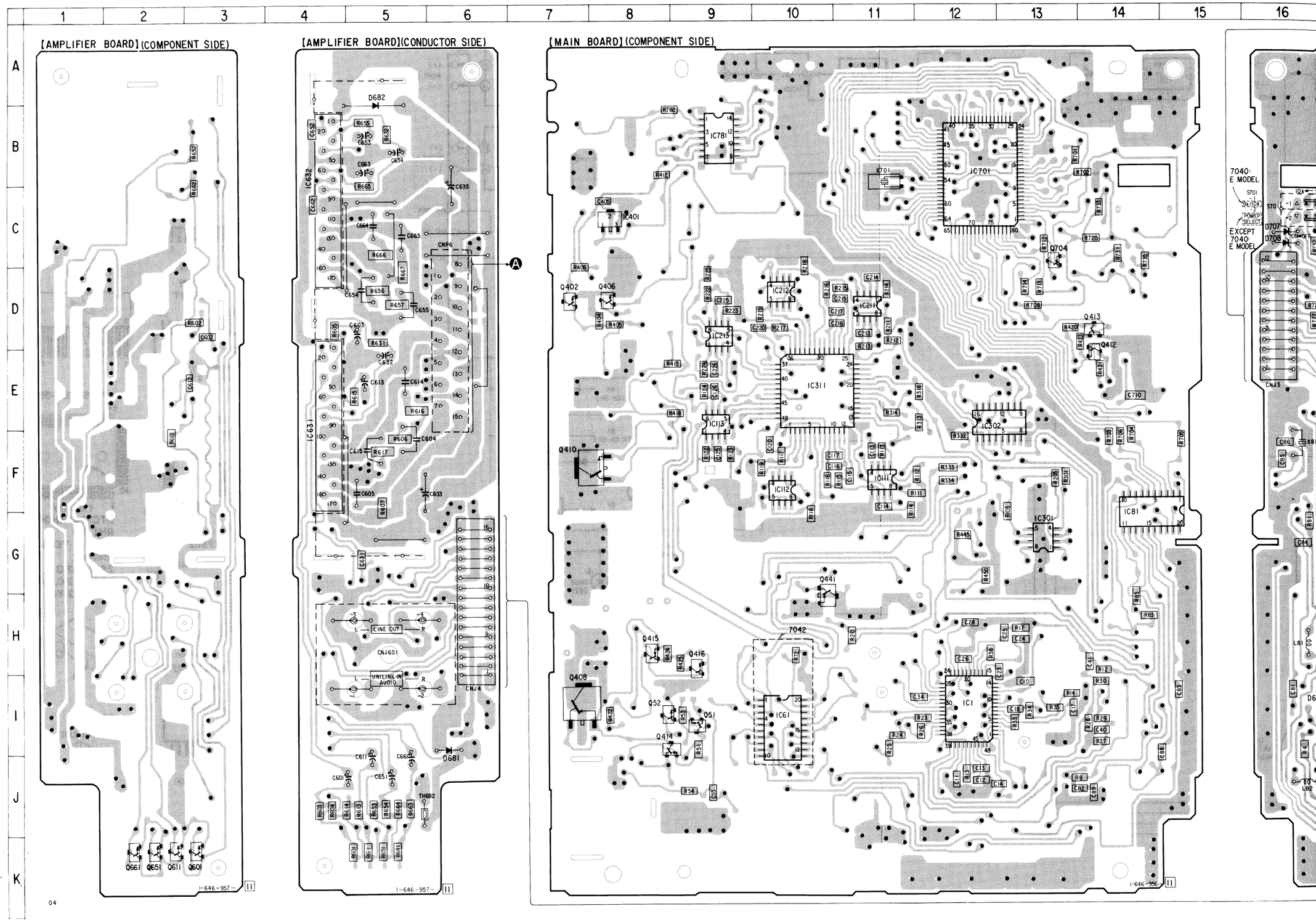

www.manualscenter.com

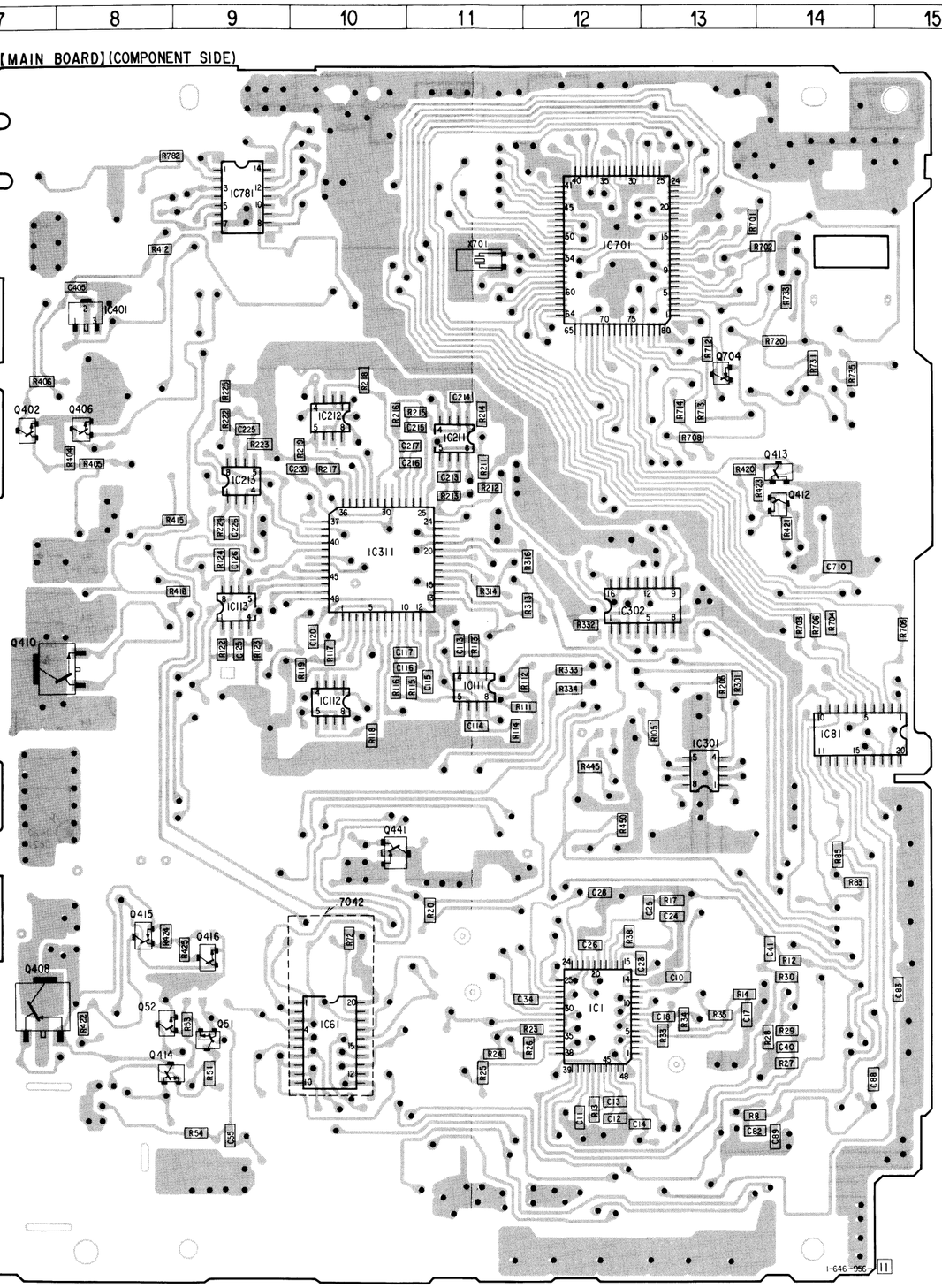

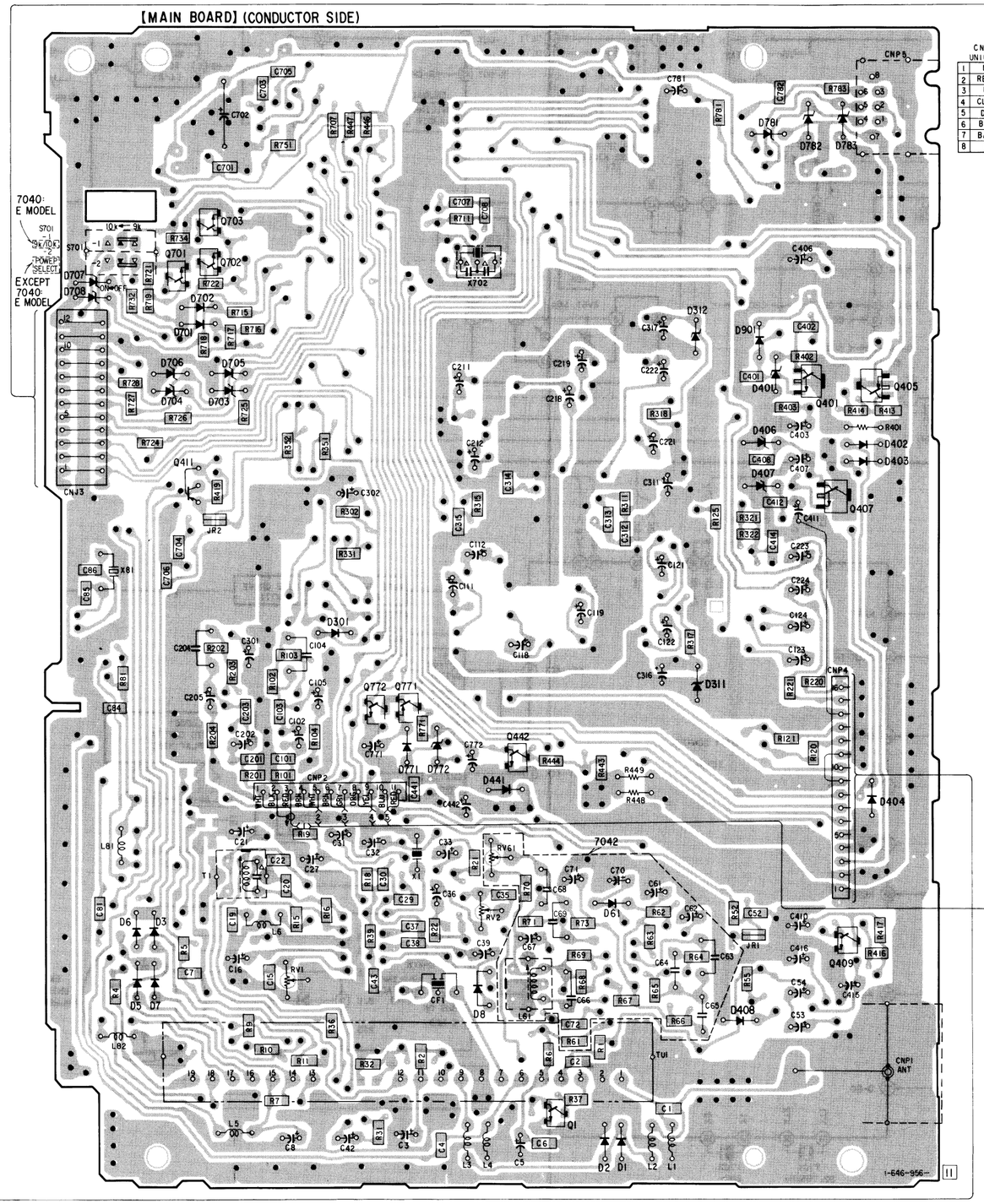

CNP5 UNI LINK	
1	N.C
2	RESET
3	N.C
4	CLOCK
5	DATA
6	BUS ON
7	BACK UP
8	GND

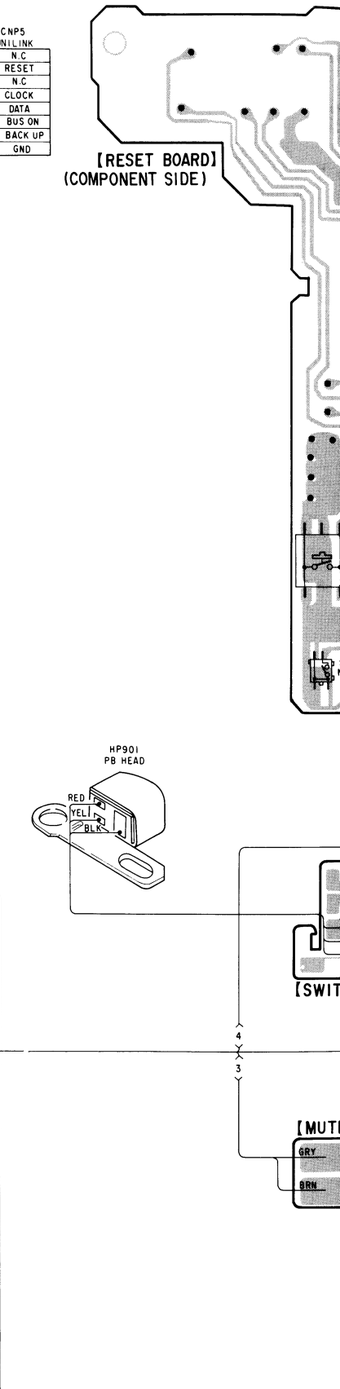

www.manualscenter.com

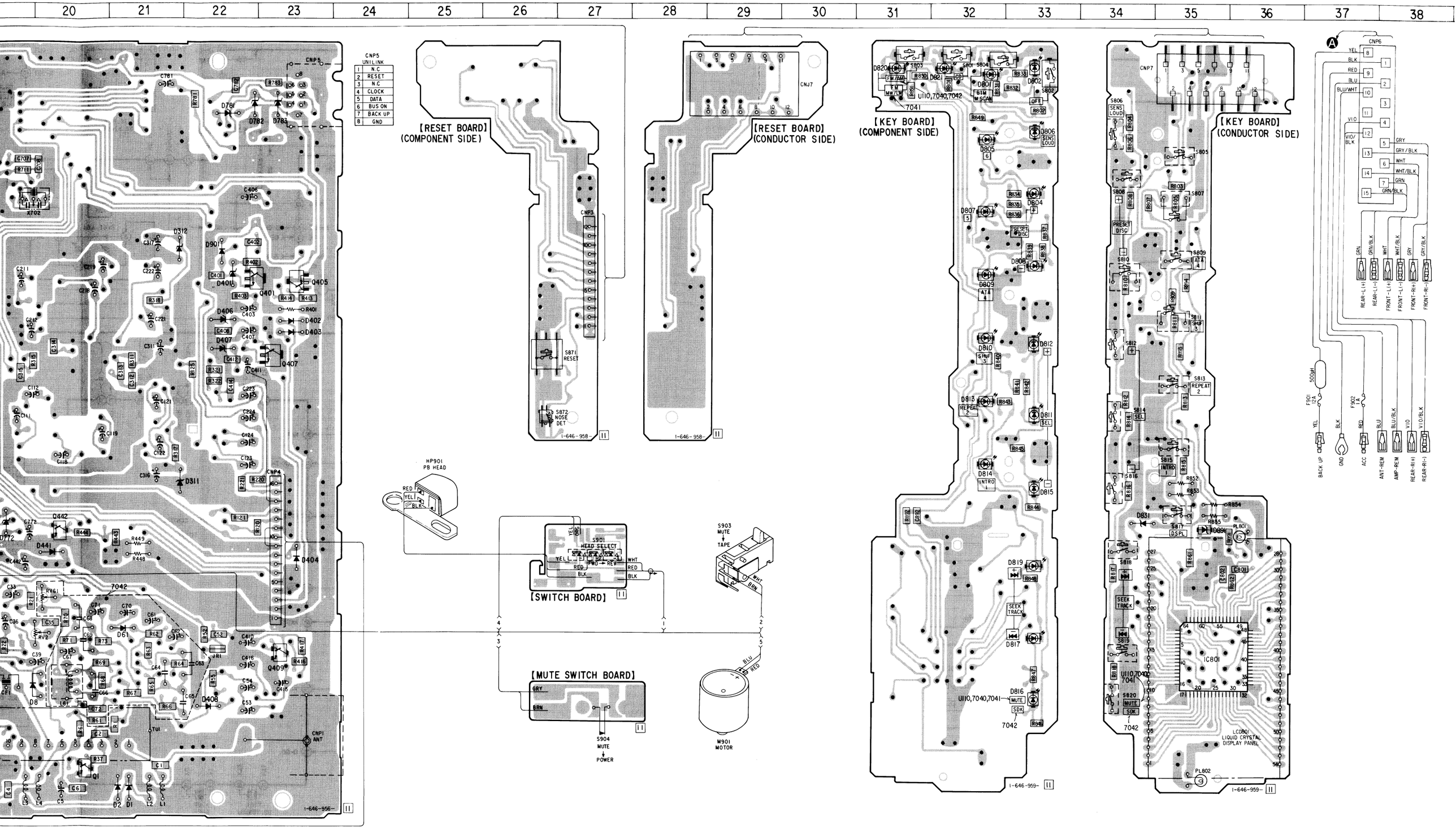

www.manualscenter.com

5-5. SCHEMATIC DIAGRAM • Refer to page 35 for IC Block Diagrams.

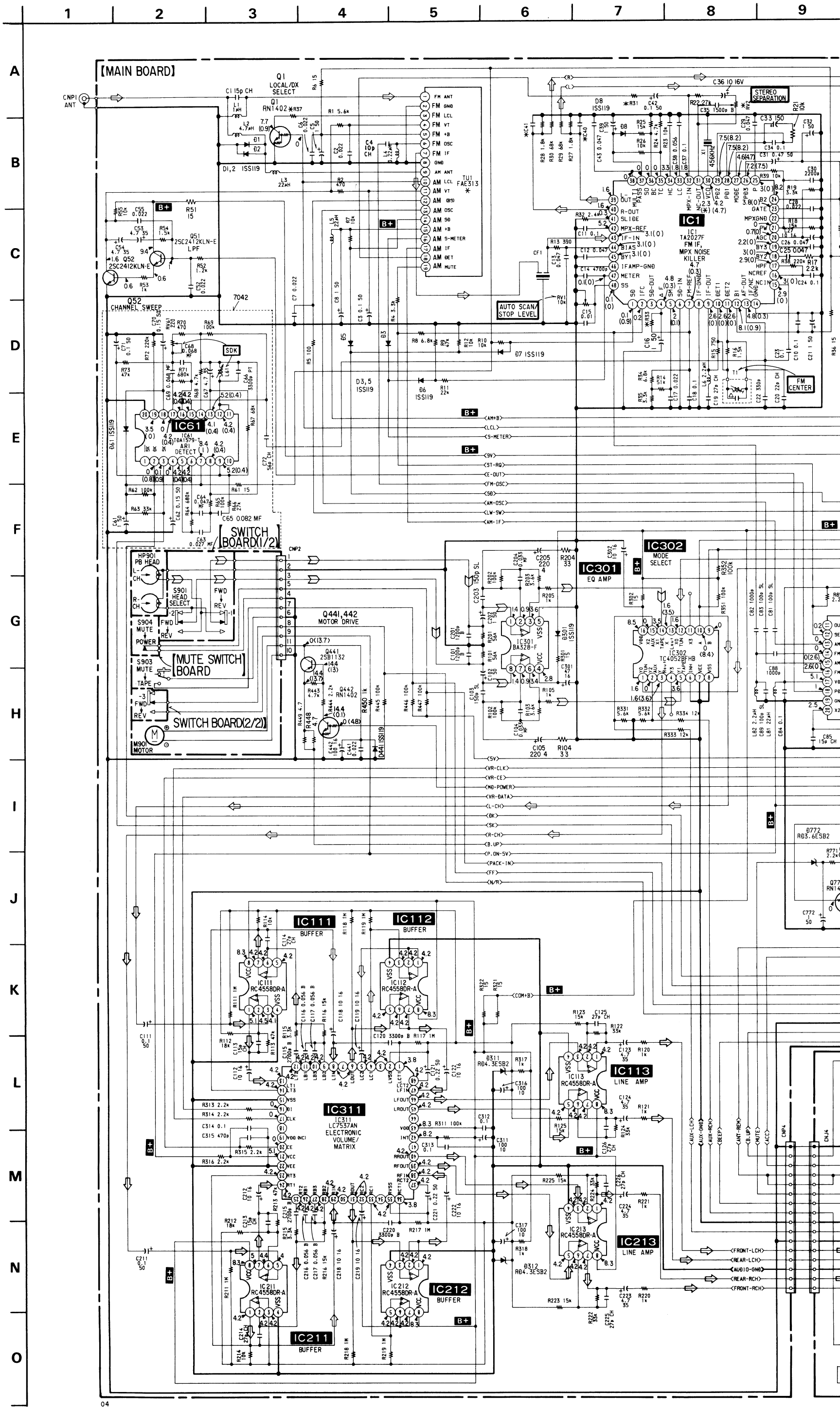

www.manualscenter.com

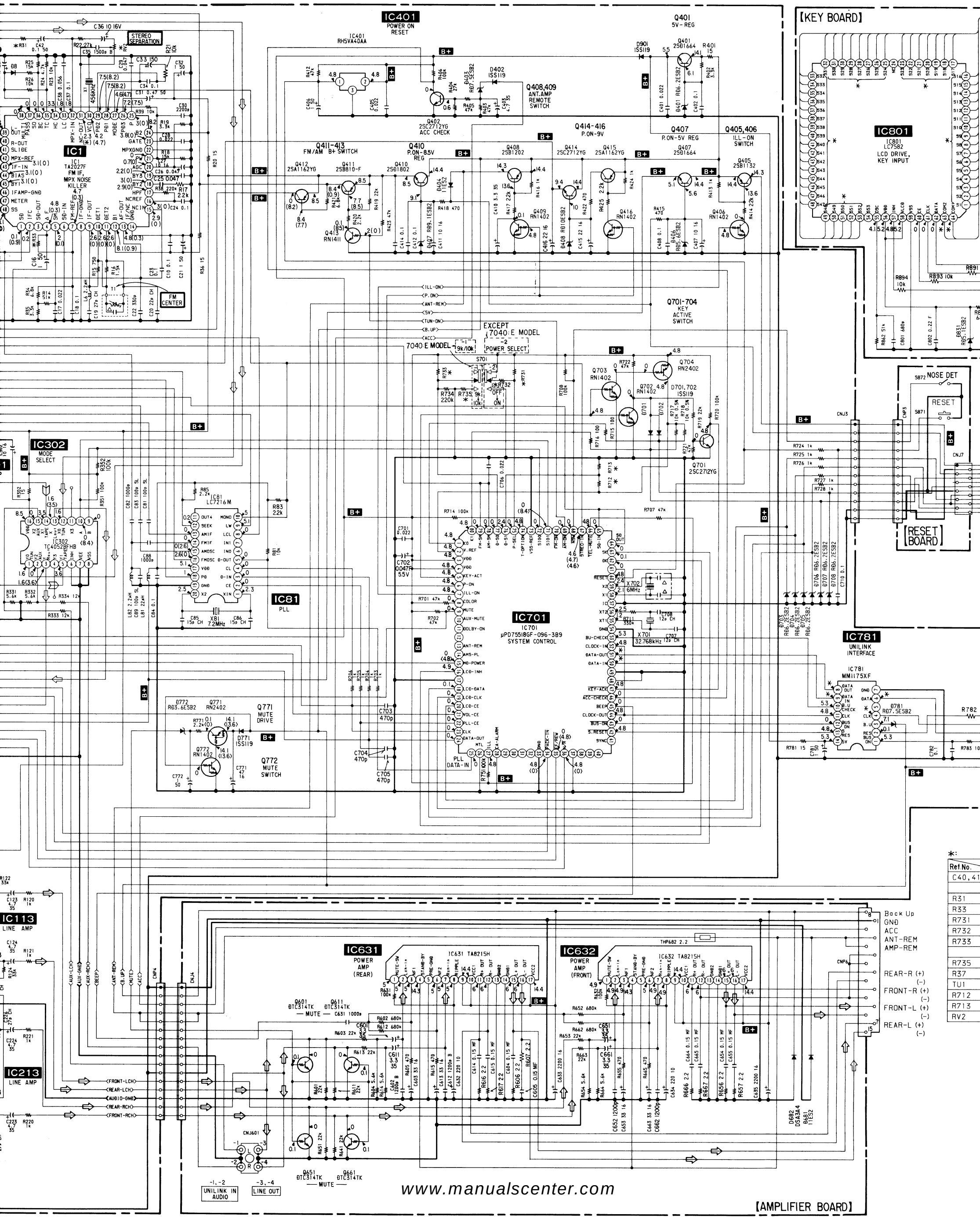

*:

Ref.No.
C40,41
R31
R33
R731
R732
R733
R735
R37
TU1
R712
R713
RV2

www.manualscenter.com

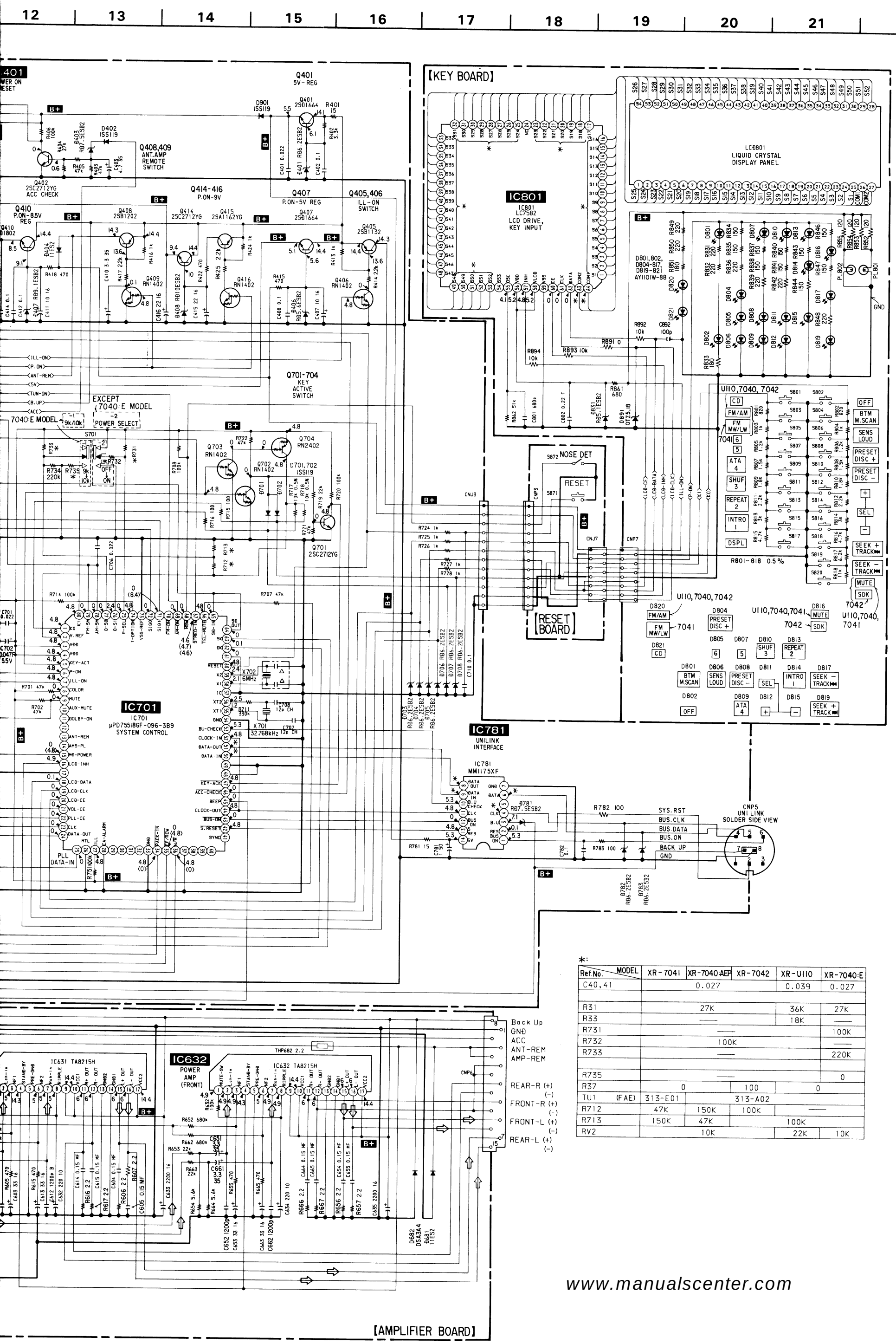

*:

Ref.No. \ MODEL	XR-7041	XR-7040:AEP	XR-7042	XR-U110	XR-7040:E
C40,41	0.027			0.039	0.027
R31	27K			36K	27K
R33	—			18K	—
R731	—				100K
R732	100K				—
R733	—				220K
R735	—				0
R37	0		100	0	
TU1 (FAE)	313-E01	313-A02			
R712	47K	150K	100K	—	
R713	150K	47K	100K		
RV2	10K			22K	10K

www.manualscenter.com

● Liquid Crysta

SEGMEN

COMMON

Note:

- All capacitors are in μF
  50WV or less are not i
  and tantalums.
- All resistors are in Ω a
  specified.
- △ : internal compon
- ▭ : adjustment for re
- Power voltage is dc 14.4V
  supply from Back Up and
- Voltage is dc with respect t
  conditions.
  no mark : FM
  ( ) : AM
  〈 〉 : PLAY
  ✳ : Impossible meas
- Voltages are taken with a
  Voltage variations may b
  tion tolerances.
- Signal path.
  ⇨ : FM
- 7040 : XR-7040
  7041 : XR-7041
  7042 : XR-7042
  U110 : XR-U110

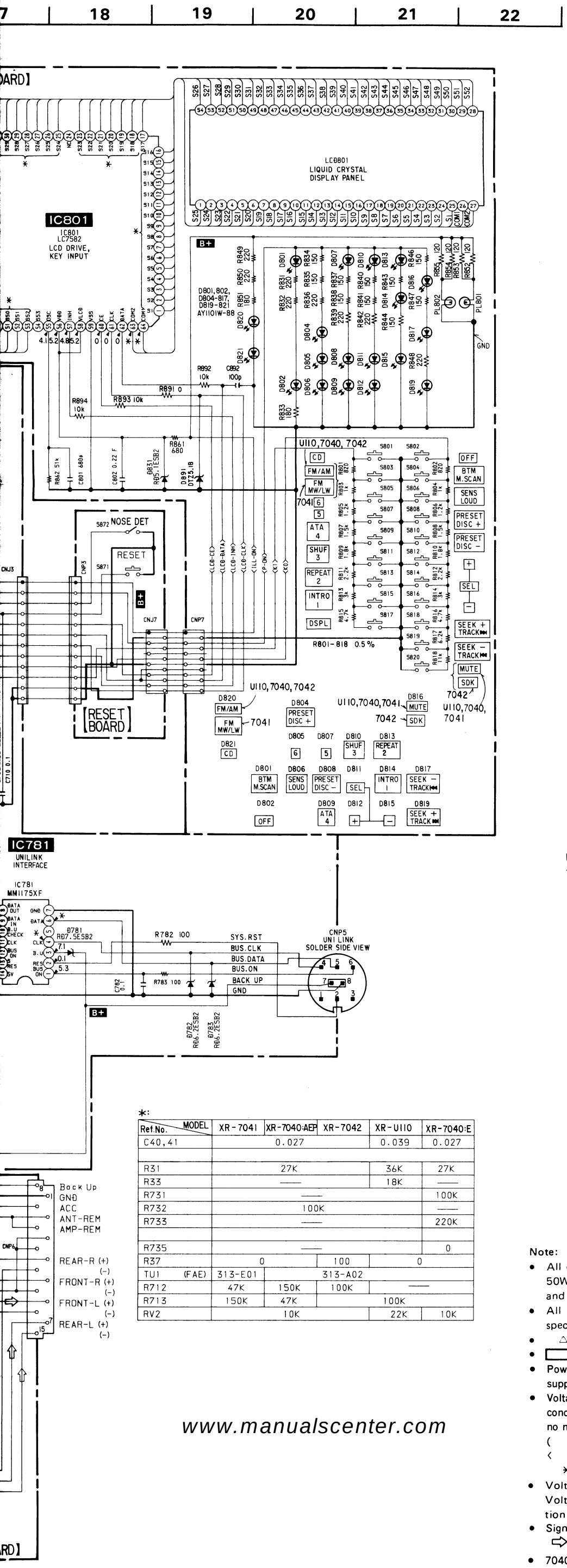

*:

Ref.No. \ MODEL	XR-7041	XR-7040:AEP	XR-7042	XR-U110	XR-7040:E
C40,41	0.027			0.039	0.027
R31	27K			36K	27K
R33	—			18K	—
R731	—				100K
R732	100K				—
R733	—				220K
R735	—				0
R37	0		100	0	
TU1 (FAE)	313-E01	313-A02			
R712	47K	150K	100K	—	
R713	150K	47K	100K		
RV2	10K			22K	10K

www.manualscenter.com

● **Liquid Crystal Display Panel (LCD801)**

SEGMENT

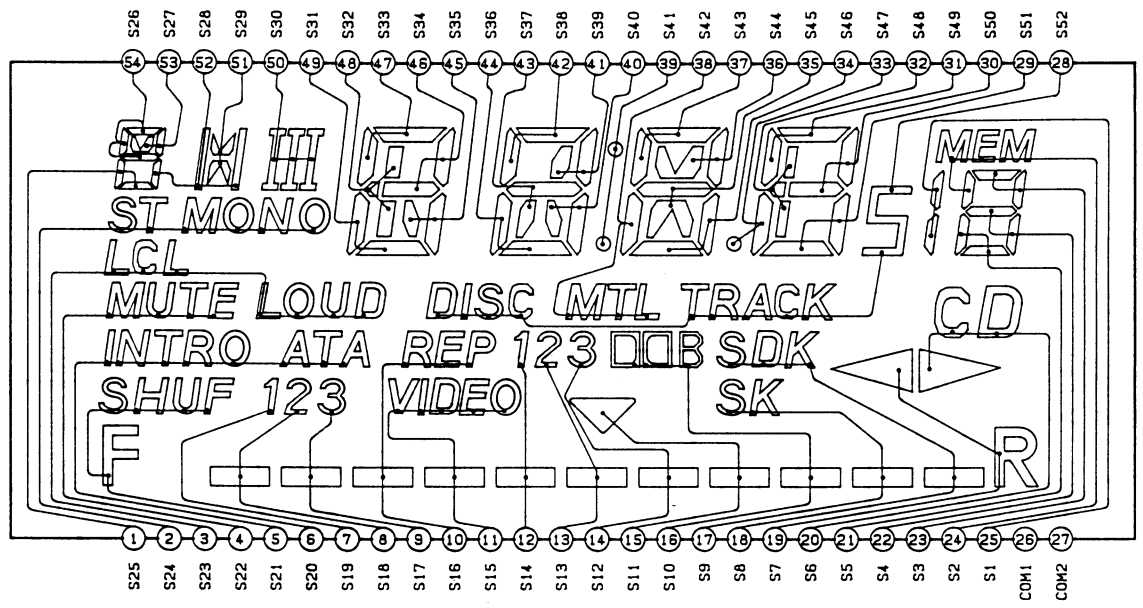

COMMON

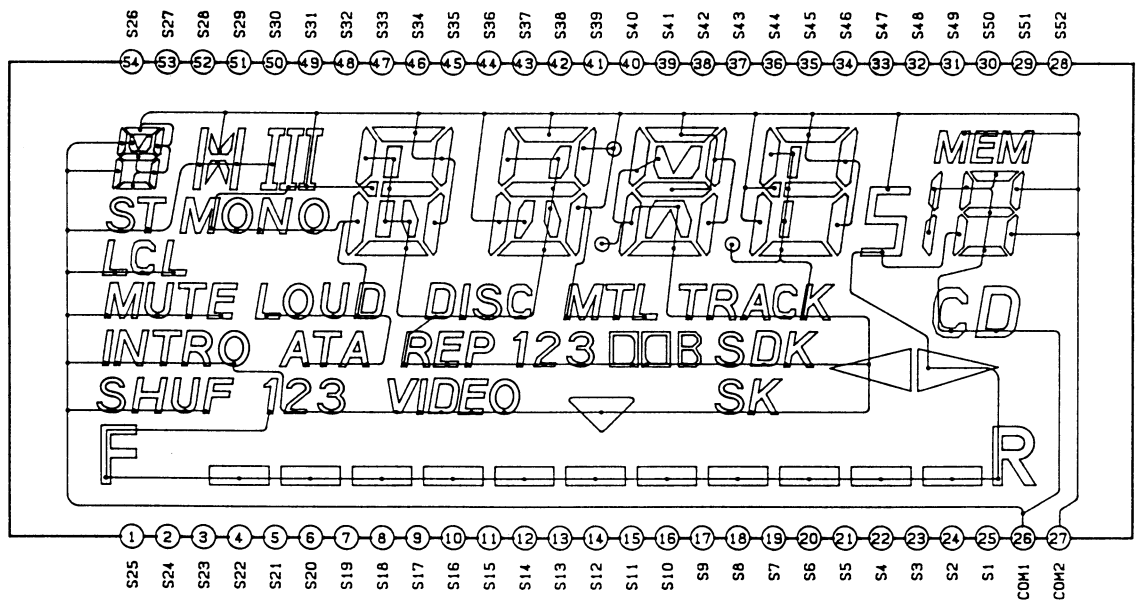

Note:

- All capacitors are in μF unless otherwise noted. pF: μμF 50WV or less are not indicated except for electrolytics and tantalums.
- All resistors are in Ω and 1/4 W or less unless otherwise specified.
- △ : internal component.
- ▭ : adjustment for repair.
- Power voltage is dc 14.4V and fed with regulated dc power supply from Back Up and ACC terminal.
- Voltage is dc with respect to ground under no-signal (detuned) conditions.
  no mark : FM
  ( ) : AM
  〈 〉 : PLAY
  ✳ : Impossible measurement point
- Voltages are taken with a VOM (Input Impedance 10MΩ). Voltage variations may be noted due to normal production tolerances.
- Signal path.
  ⇨ : FM
- 7040 : XR-7040
  7041 : XR-7041
  7042 : XR-7042
  U110 : XR-U110

• IC Block Diagrams

IC1 TA2027F

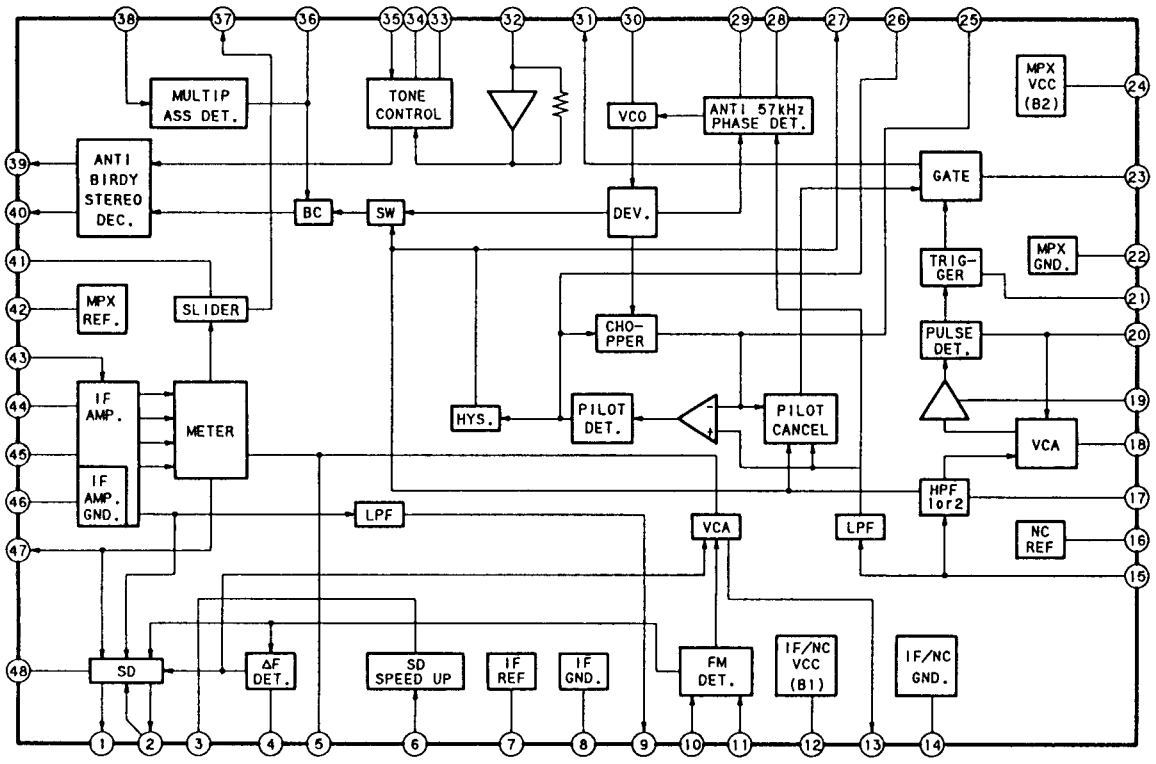

IC311 LC7537AN

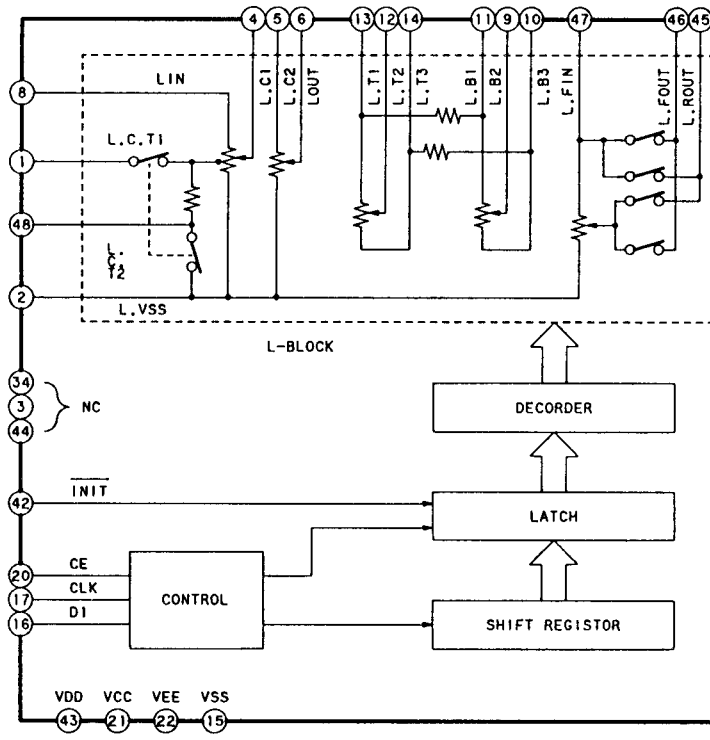

IC81 LC7216M

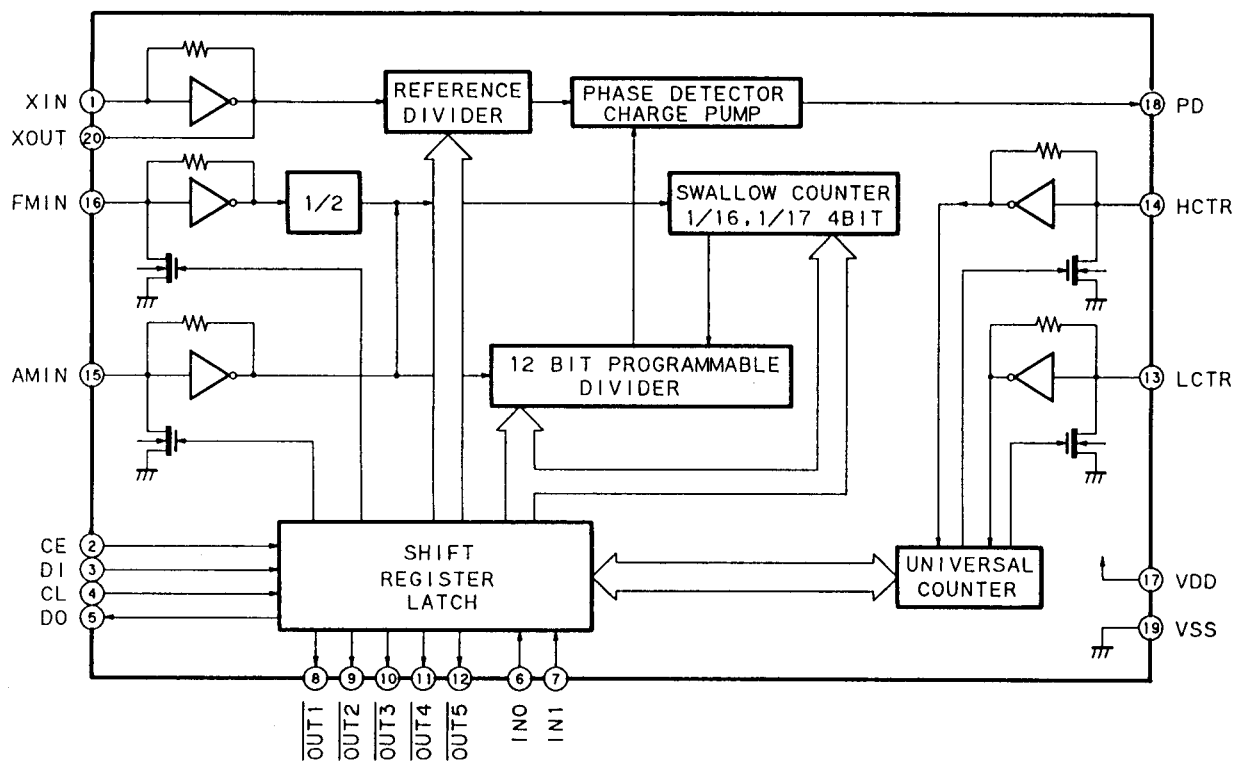

IC781 MM1175XF

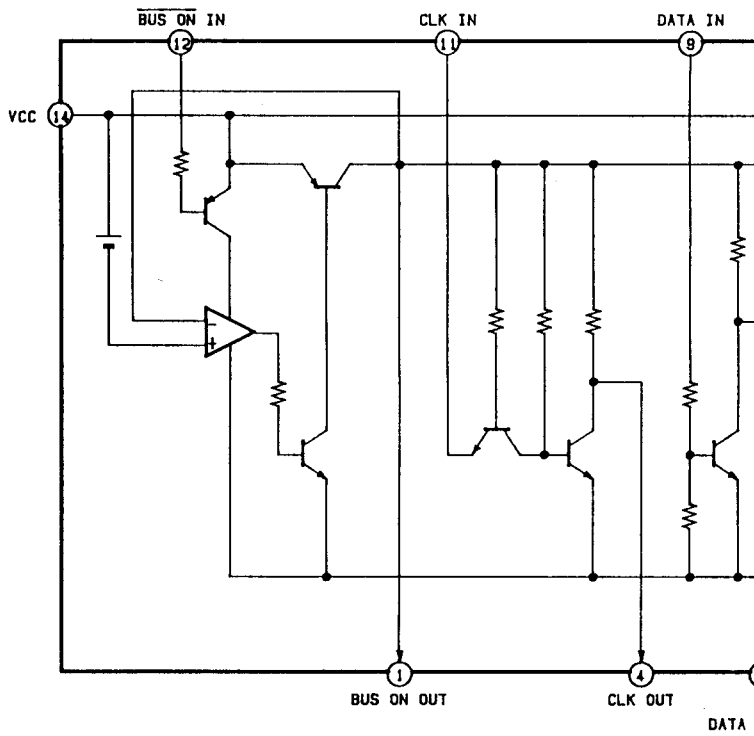

IC302 TC4052BFHB

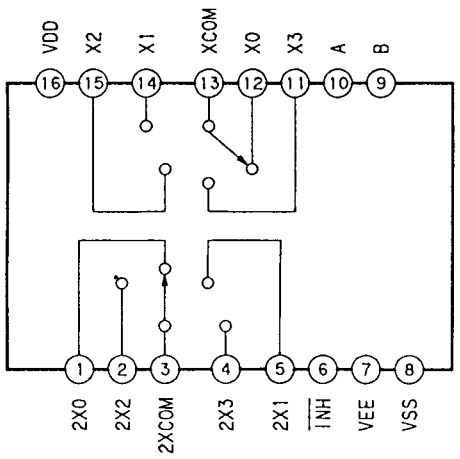

IC631, 632 TA8215H

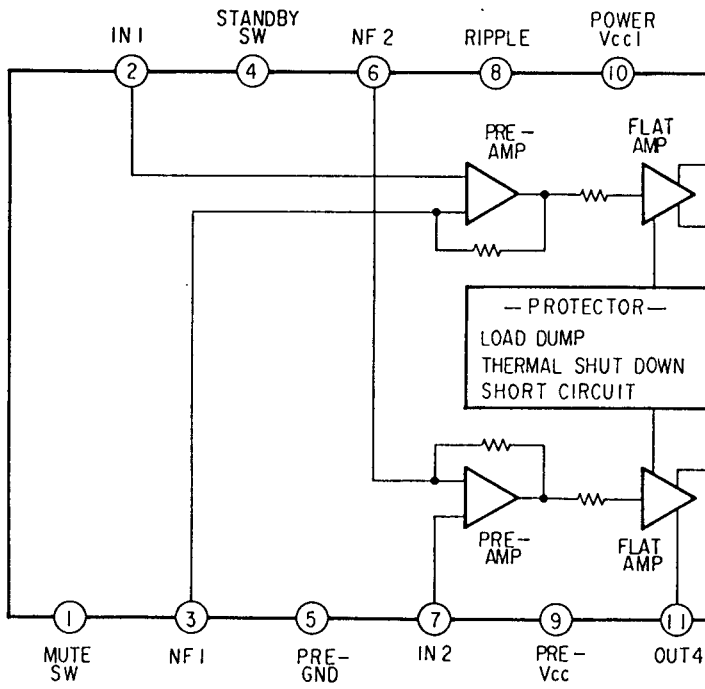

www.manualscenter.com

IC311 LC7537AN

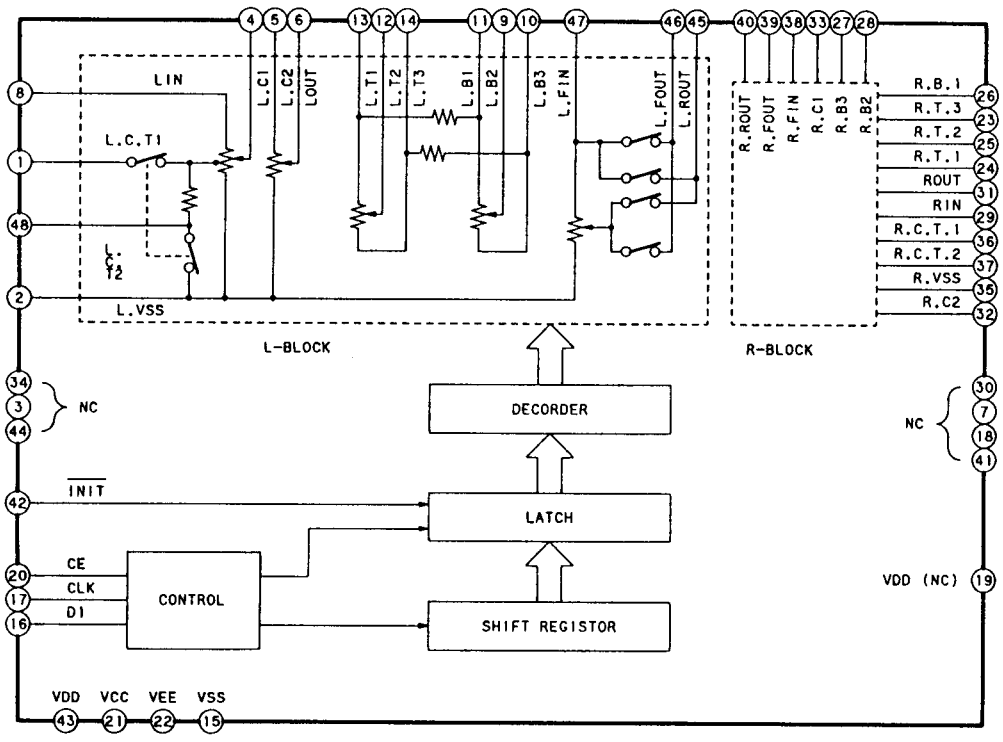

IC801 LC7582

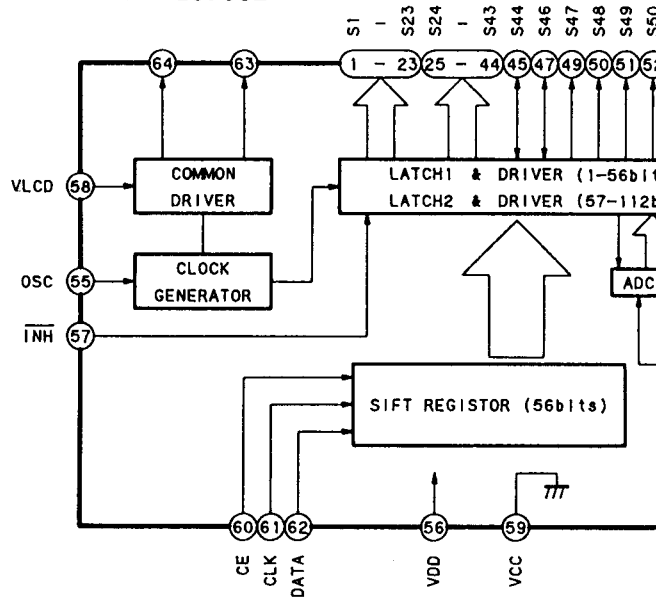

IC781 MM1175XF

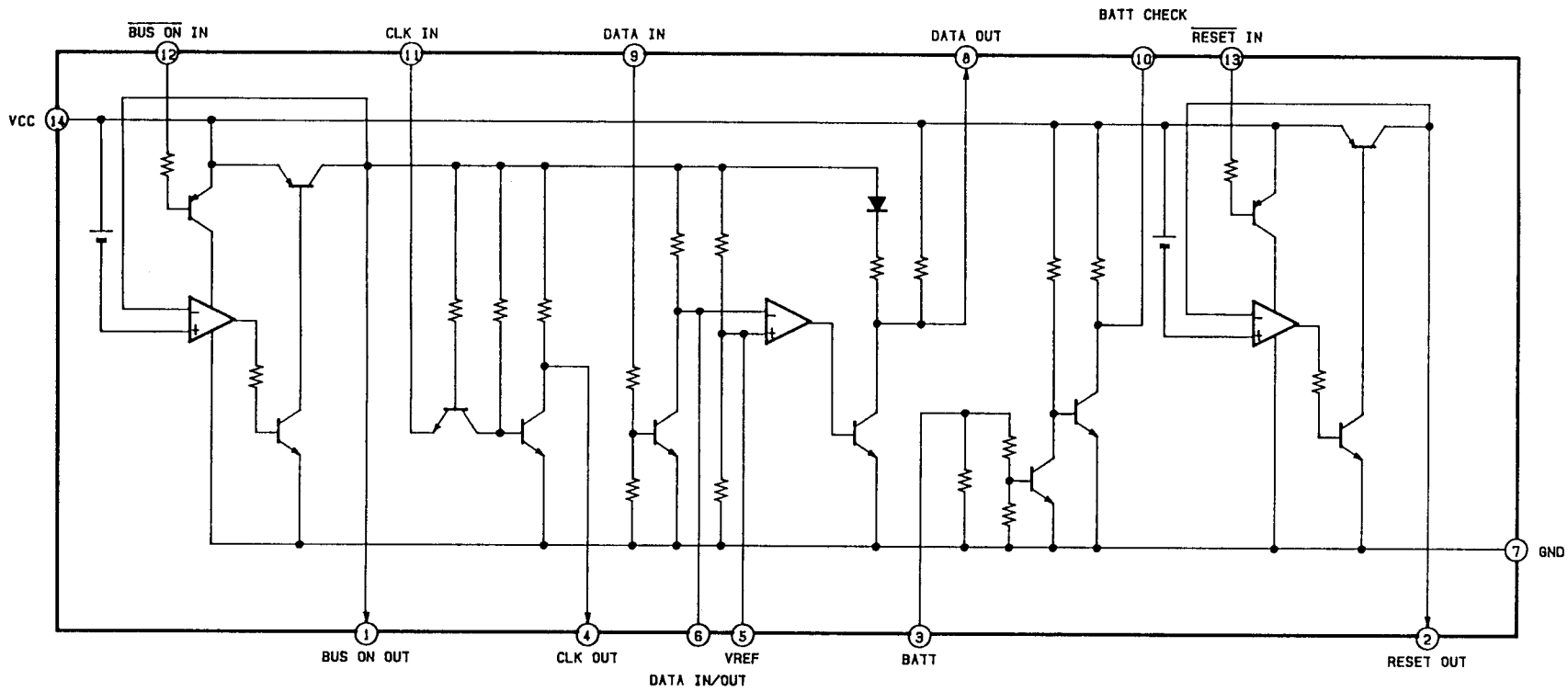

www.manualscenter.com

IC631, 632 TA8215H

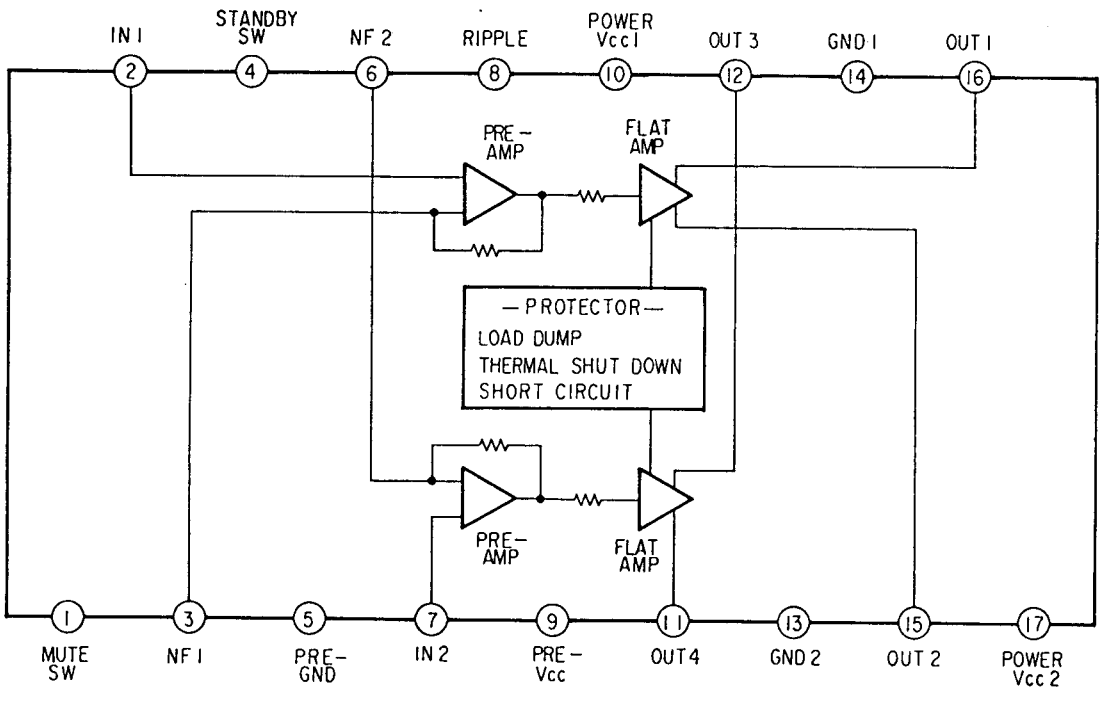

IC61 TDA1579T (XR-7042 only)

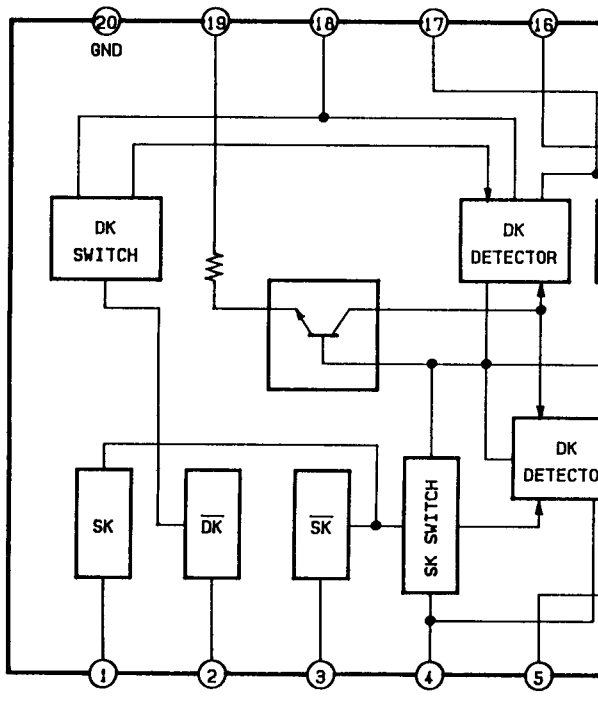

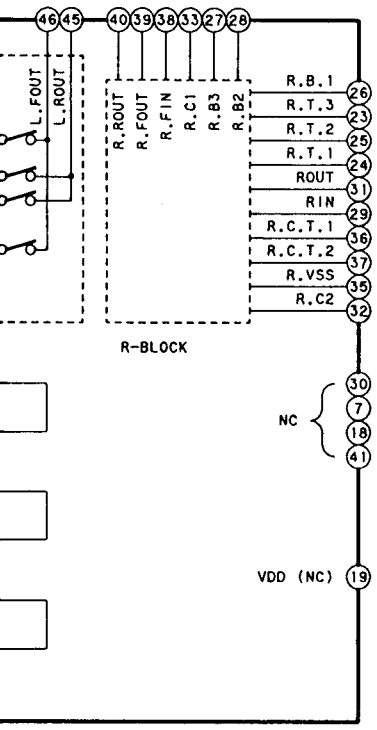

IC801 LC7582

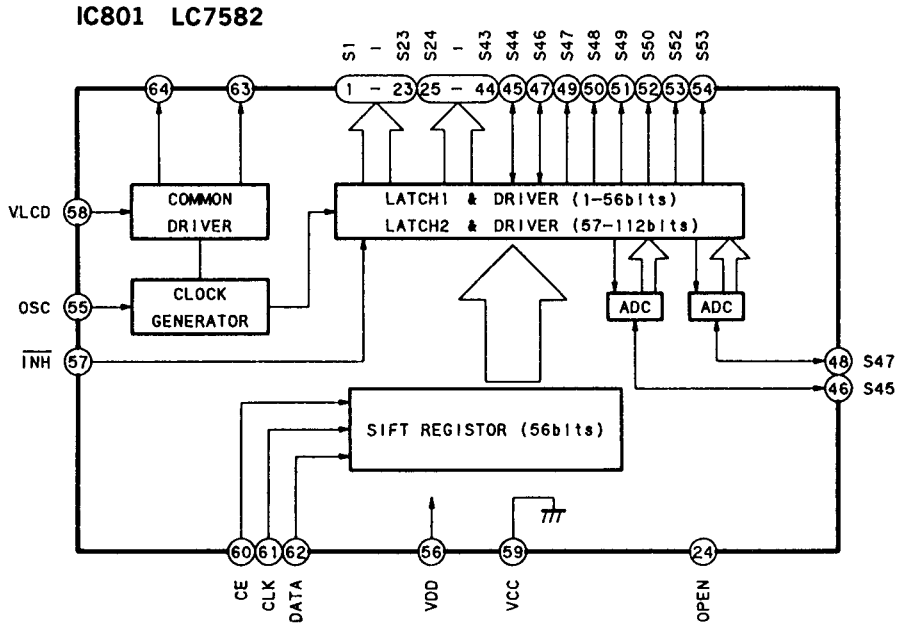

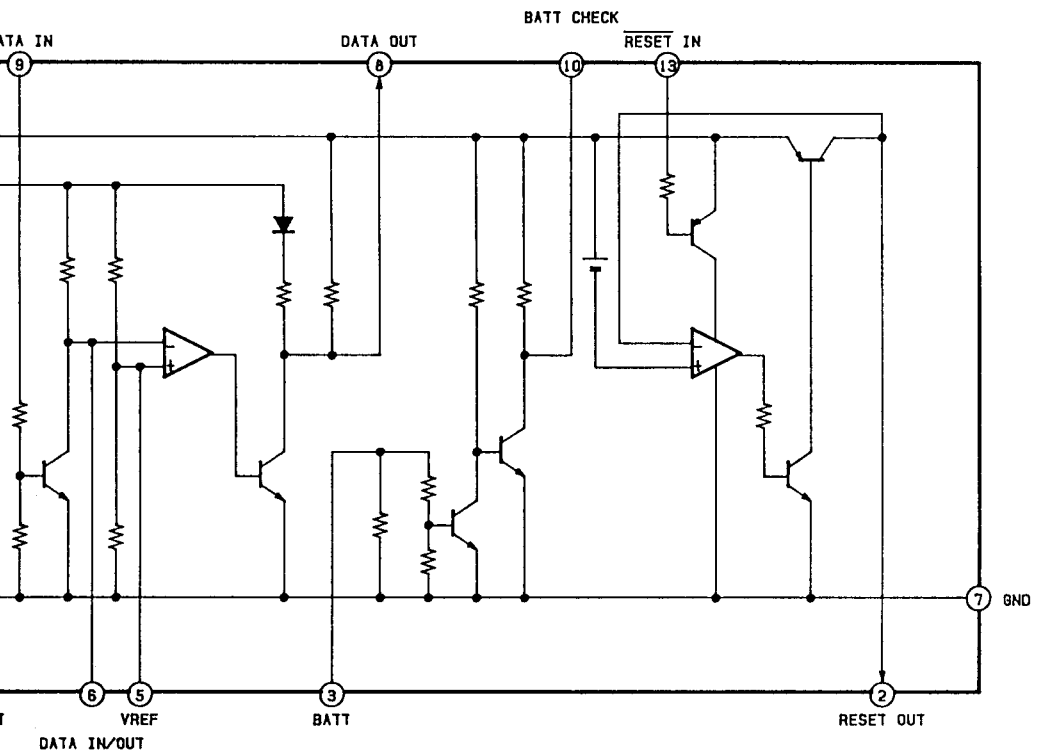

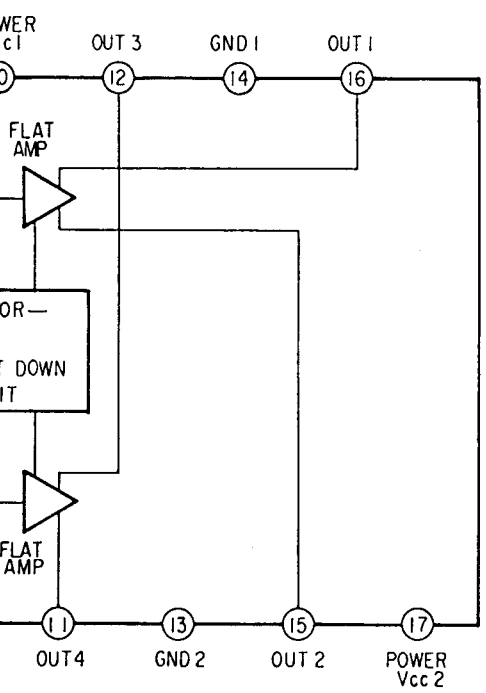

IC61 TDA1579T (XR-7042 only)

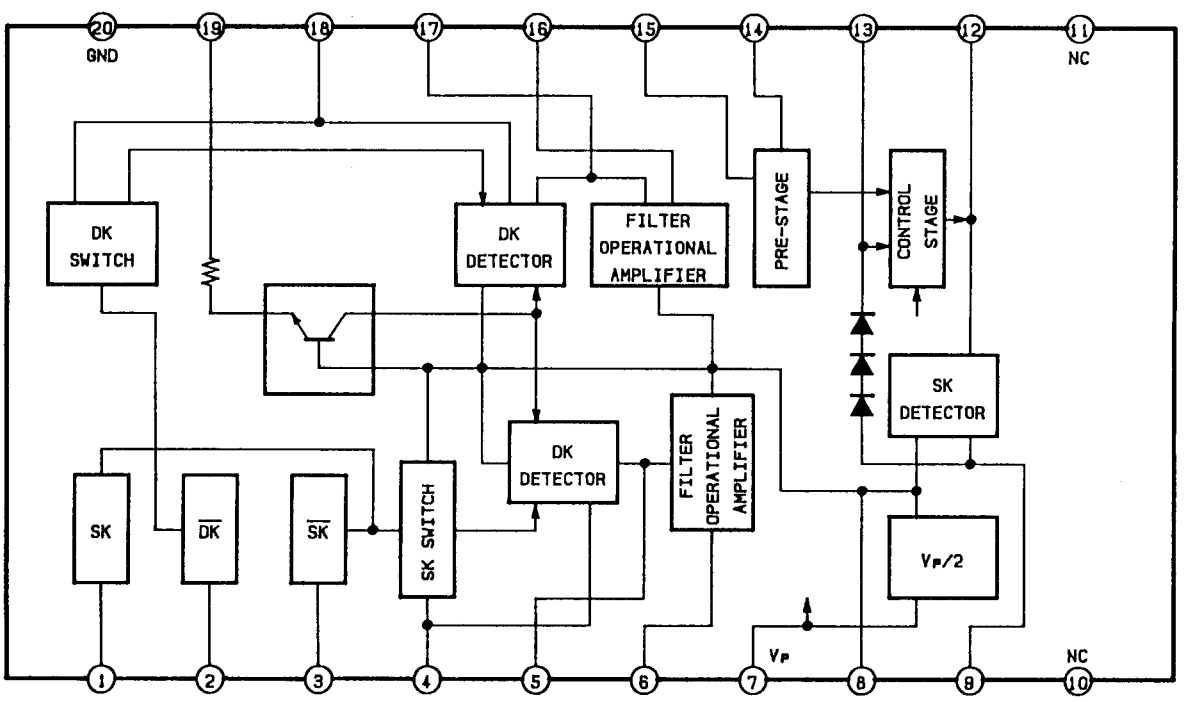

www.manualscenter.com

SECTION 6
EXPLODED VIEWS

NOTE:
- The mechanical parts with no reference number in the exploded views are not supplied.
- Items marked "*" are not stocked since they are seldom required for routine service. Some delay should be anticipated when ordering these items.
- -XX and -X mean standardized parts, so they may have some difference from the original one.
- Color Indication of Appearance Parts
  Example :
  KNOB, BALANCE (WHITE)... (RED)
  ↑ ↑
  Parts Color Cabinet's Color
- Hardware (# mark) list is given in the last of this parts list.
- 7040 : XR-7040
  7041 : XR-7041
  7042 : XR-7042
  U110 : XR-U110

6-1. CHASSIS SECTION

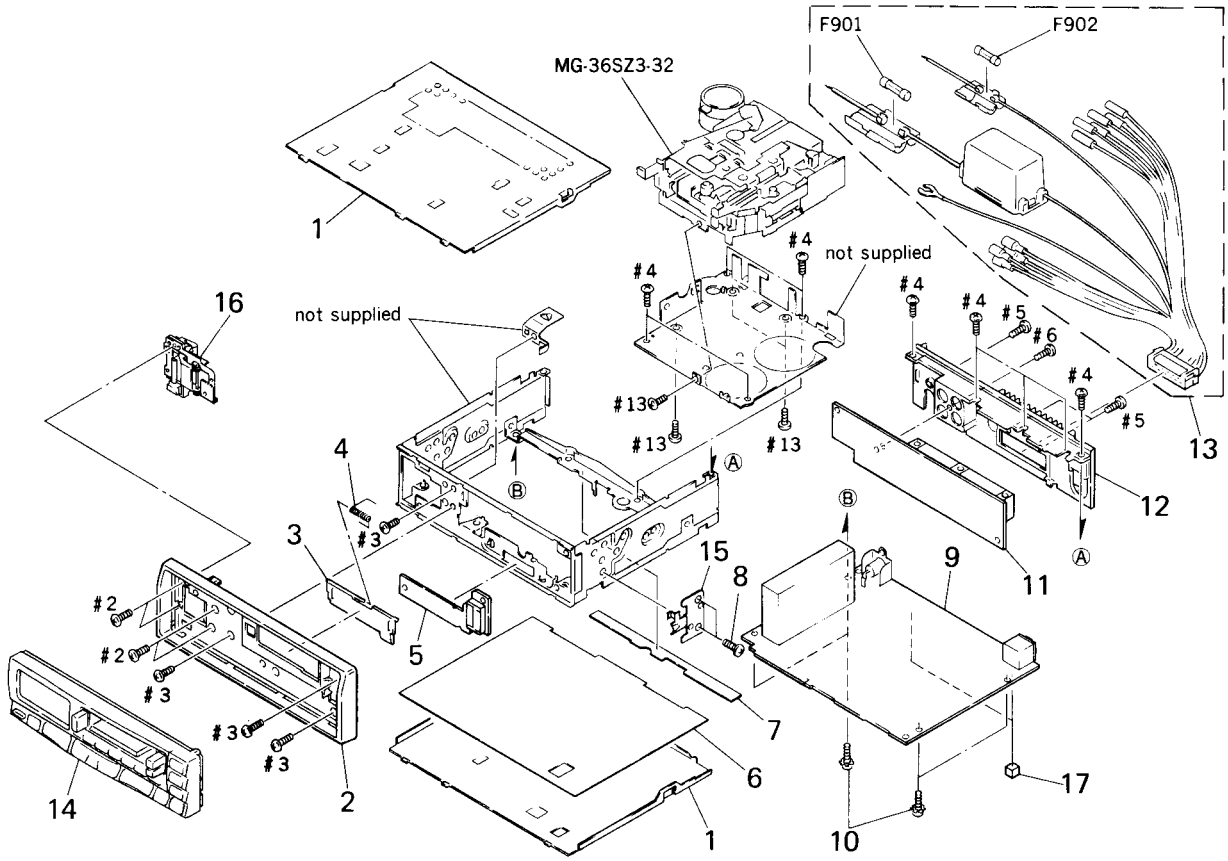

Ref. No.	Part No.	Description	Remark
* 1	3-377-591-01	COVER	
2	3-384-659-01	PANEL, SUB	
3	3-378-541-51	DOOR, CASSETTE (7041)	
3	3-378-541-61	DOOR, CASSETTE (U110)	
3	3-378-541-71	DOOR, CASSETTE (7042)	
3	3-378-541-81	DOOR, CASSETTE (7040)	
4	3-377-892-01	SPRING (C DOOR), TORSION	
* 5	1-646-958-11	RESET BOARD	
* 6	3-377-593-21	INSULATOR	
7	3-379-684-01	INSULATOR (CHASSIS)	
8	3-329-814-01	SCREW (M4X6), SPECIAL PAN (+)	
* 9	A-3295-349-A	MAIN BOARD, COMPLETE (7041)	
* 9	A-3295-350-A	MAIN BOARD, COMPLETE (U110)	
* 9	A-3295-356-A	MAIN BOARD, COMPLETE (7040:AEP)	
* 9	A-3295-357-A	MAIN BOARD, COMPLETE (7040:E)	
* 9	A-3295-358-A	MAIN BOARD, COMPLETE (7042)	

Ref. No.	Part No.	Description	Remark
10	3-376-464-11	SCREW(+PTT 2.6X6), GROUND POINT	
* 11	A-3295-348-A	AMPLIFIER BOARD, COMPLETE	
* 12	3-385-463-01	HEAT SINK	
13	1-696-375-31	CORD (WITH CONNECTOR) (7040:E, 7041)	
13	1-696-375-41	CORD (WITH CONNECTOR) (U110)	
13	1-696-375-51	CORD (WITH CONNECTOR) (7040:AEP, 7042)	
14	A-3252-621-A	PANEL ASSY, FRONT (7041)	
14	A-3252-622-A	PANEL ASSY, FRONT (U110, 7040)	
14	A-3252-623-A	PANEL ASSY, FRONT (7042)	
* 15	3-387-688-01	PLATE (R), LOCK	
16	X-3365-507-2	LOCK ASSY	
17	9-911-841-XX	CUSHION, CASSETTE LID (U110, 7040:E, 7041, 7042)	
F901	1-532-678-11	FUSE, GLASS TUBE (12A)	
F902	1-532-360-XX	FUSE, GLASS TUBE (1A) (30mm) (U110)	
F902	1-532-452-XX	FUSE, GLASS TUBE (1A) (22mm) (7040, 7041, 7042)	

6-3. MECHANISM SECTION (1) (MG-36SZ3-32)

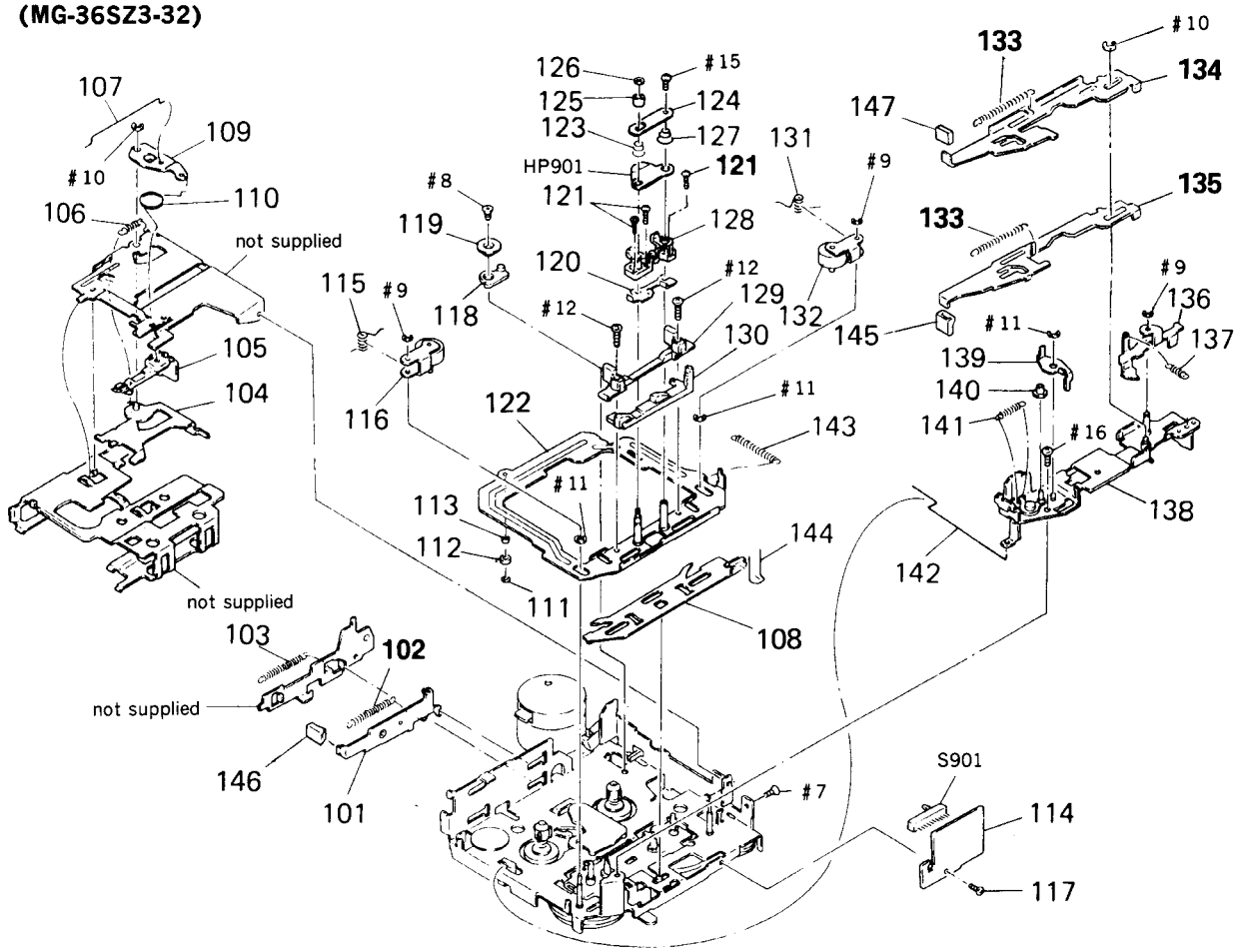

Ref. No.	Part No.	Description	Remark
* 101	3-379-144-01	LEVER (S), EJECT	
102	3-392-950-01	SPRING	
103	3-392-951-01	SPRING	
* 104	3-392-921-01	LOCK ASSY, EJECT CAM	
105	3-392-972-01	FUKER, TAPE	
106	3-392-953-01	SPRING	
107	3-392-969-01	LINK, RETURN	
* 108	3-392-919-01	ARM ASSY, F.R SELECTION	
* 109	3-392-932-01	PLATE, CENTER	
110	3-392-961-01	SPRING (B)	
111	3-570-615-00	POLY-WASHER (DIA.1.2)	
112	3-392-945-01	ROLLER (A), H.P	
113	3-392-942-01	ROLLER (B), H.P	
114	3-392-970-01	CHASSIS, SWITCH	
115	3-392-958-01	SPRING (R)	
116	3-375-378-01	ARM (R) ASSY, PINCH	
* 117	4-908-792-11	SCREW (B2X3), TAPPING, P1	
118	3-372-244-01	ARM (N), MUTE	
* 119	3-397-427-01	COLLAR, MUTE ARM	
120	3-377-908-01	SHIM (X), ADJUSTOR	
121	3-375-379-01	SCREW, AZIMUTH	
* 122	3-392-975-02	PLATE ASSY (S), HEAD	
123	3-392-956-01	SPRING (A)	
* 124	3-392-930-01	RETAINER, SPRING	
125	3-392-943-01	ROLLER, FF	

Ref. No.	Part No.	Description	Remark
126	3-676-387-00	POLY-SLIDER (DIA.1.6)	
127	3-392-955-01	SPRING (A)	
* 128	3-379-142-01	ARM (B), ADJUSTOR	
129	3-392-984-02	GUIDE, TAPE	
130	3-377-909-01	LINK (X), ADJUSTOR	
131	3-392-957-01	SPRING (F)	
132	3-375-377-01	ARM (F) ASSY, PINCH	
133	3-392-948-01	SPRING	
* 134	3-379-145-01	LEVER (S), FF	
* 135	3-379-146-01	LEVER (S), REW	
* 136	3-392-935-01	ARM, LOCK	
137	3-392-917-01	SPRING	
* 138	3-372-242-01	BRACKET ASSY (D), LEVER	
* 139	3-392-933-01	LEVER (B), CHANGE	
140	3-392-994-01	ROLLER, PROGRAM	
141	3-392-954-01	SPRING	
142	3-372-243-01	LINK (B), SELECTOR	
143	3-392-952-01	SPRING	
144	3-392-962-01	SPRING	
* 145	3-379-139-01	BUTTON, REW	
* 146	3-379-140-01	BUTTON, EJECT	
* 147	3-379-141-01	BUTTON, FF	
HP901	1-543-717-11	HEAD, MAGNETIC (PLAYBACK)	
S901	1-692-036-11	SWITCH, SLIDE (HEAD SELECT)	

www.manualscenter.com

6-2. FRONT PANEL SECTION

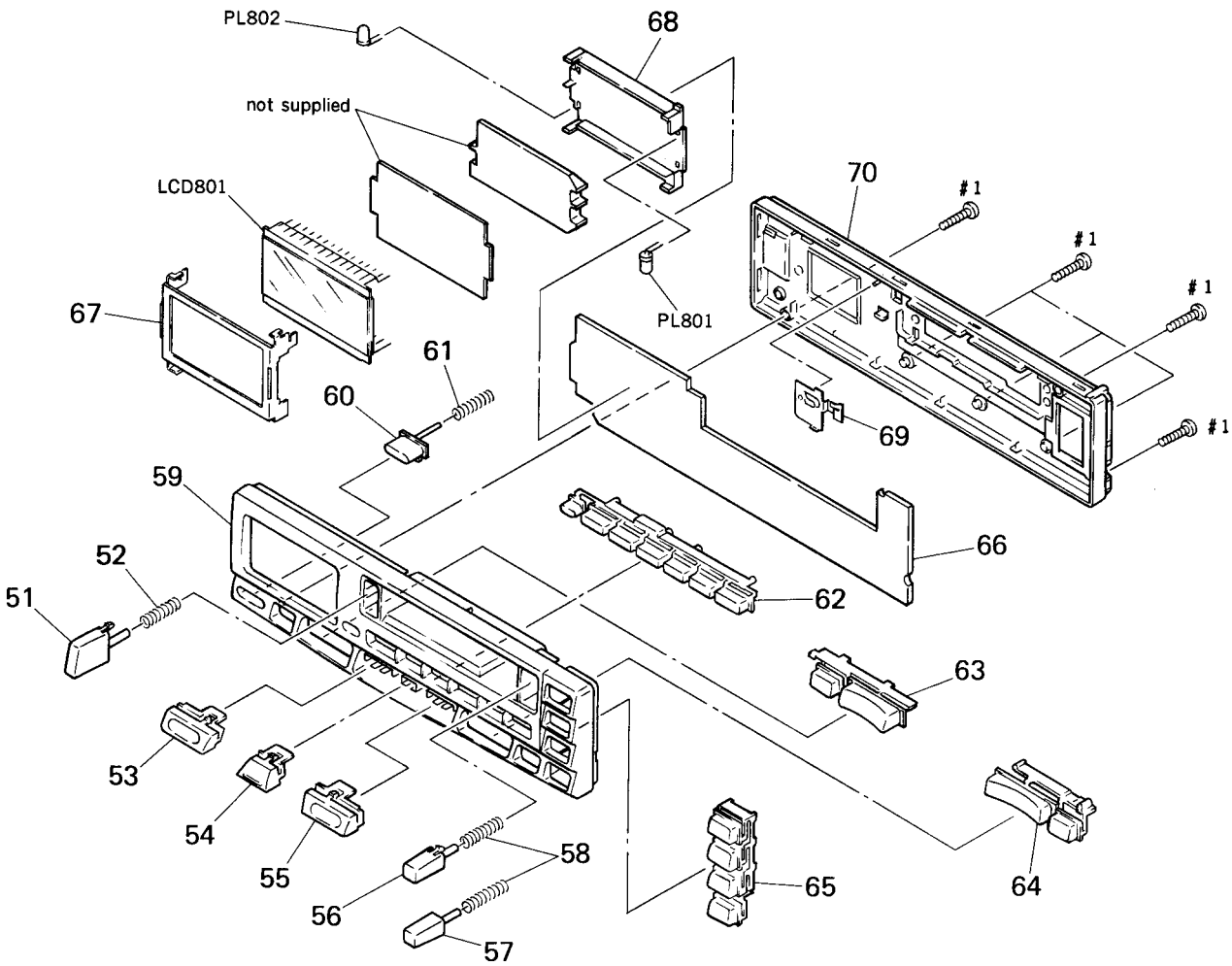

Ref. No.	Part No.	Description	Remark
51	X-3366-086-1	BUTTON (EJECT) ASSY	
52	3-375-371-01	SPRING (EJECT)	
53	3-384-649-01	BUTTON (-)	
54	3-384-650-01	BUTTON (SEL)	
55	3-384-648-01	BUTTON (+)	
56	3-384-653-01	BUTTON (FF)	
57	3-384-654-01	BUTTON (REW)	
58	3-375-372-01	SPRING (F/R)	
59	3-384-641-11	PANEL, FRONT (U110, 7040)	
59	3-384-641-21	PANEL, FRONT (7041)	
59	3-384-641-31	PANEL, FRONT (7042)	
60	3-384-652-01	BUTTON (RELEASE)	
61	3-375-373-01	SPRING (RELEASE)	
62	3-384-651-01	BUTTON (DSPL, 1-6)	

Ref. No.	Part No.	Description	Remark
63	3-385-461-01	BUTTON (MUTE, SEEK TRACK) (U110, 7040, 7041)	
63	3-385-461-11	BUTTON (SDK, SEEK TRACK) (7042)	
64	3-385-462-01	BUTTON (PRESET DISC, SENS LOUD)	
65	3-385-460-01	BUTTON (FM/AM, CD, BTM M. SCAN, OFF) (U110, 7040, 7042)	
65	3-385-460-11	BUTTON (FM MW/LW, CD, BTM M. SCAN, OFF) (7041)	
* 66	A-3295-361-A	KEY BOARD, COMPLETE	
* 67	3-387-815-01	PLATE (LCD), GROUND	
* 68	3-357-087-01	HOLDER (LCD)	
69	3-384-665-01	PLATE (F-S), GROUND	
70	3-384-643-01	PANEL, FRONT BACK	
LCD801	1-810-020-11	DISPLAY PANEL, LIQUID CRYSTAL	
PL801	1-517-156-11	LAMP, PILOT	
PL802	1-517-156-11	LAMP, PILOT	

6-4. MECHANISM SECTION (2) (MG-36SZ3-32)

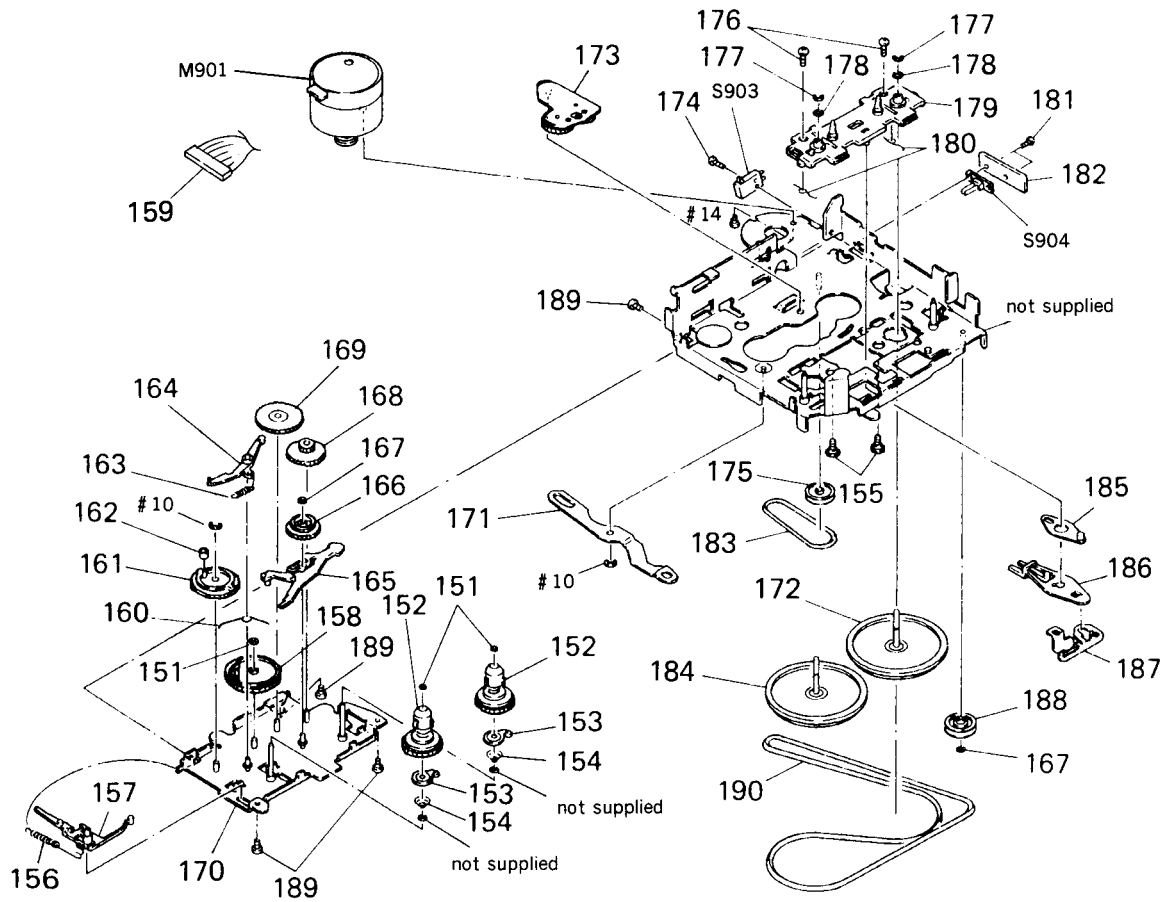

Ref. No.	Part No.	Description	Remark
151	3-676-387-00	POLY-SLIDER (DIA. 1.6)	
152	3-376-196-01	SPINDLE ASSY (S), REEL	
153	3-375-380-01	CAM ASSY, DETECTION	
154	3-370-619-01	SPRING, BACK TENSION	
155	3-392-918-01	SCREW, EJECT HOOK	
156	3-392-959-01	SPRING	
157	3-392-985-02	RATCHET	
158	3-392-990-01	GEAR, DETECTION	
159	3-387-912-01	CONNECTOR ASSY, 11P	
160	3-392-960-01	SPRING	
161	3-392-987-01	GEAR, SELECTOR	
162	3-392-944-01	COLLAR (SELECTOR GEAR)	
163	3-375-131-01	SPRING, GEAR LOCK ARM	
164	3-392-989-02	ARM, GEAR LOCK	
165	3-392-986-01	ARM, SENSOR	
166	3-392-915-01	GEAR, IDLE	
167	3-570-615-00	POLY-WASHER (DIA. 1.2)	
168	3-392-936-01	GEAR (A)	
169	3-392-937-01	GEAR (B)	
* 170	3-392-976-01	BASE ASSY, REEL	
* 171	3-392-979-01	LEVER, REVERSE	
172	3-392-926-02	FLYWHEEL ASSY (BF)	

Ref. No.	Part No.	Description	Remark
173	3-392-916-01	ARM ASSY, TU GEAR	
174	3-318-203-11	SCREW (B1.7X6), TAPPING	
175	3-392-938-01	GEAR, PULLY	
176	3-318-204-81	SCREW (M1.7X3), TAPPING	
177	3-590-768-00	RING (A), E	
178	3-701-437-11	POLY-SLIDER (A)	
* 179	3-375-381-01	BRACKET ASSY (X), CM	
180	3-392-963-01	SPRING (R)	
181	3-318-204-91	SCREW (M1.7X4), TAPPING	
182	3-375-376-01	MUTE (PWB)	
183	3-375-375-02	BELT (C), SUB	
184	3-392-995-02	FLYWHEEL ASSY (BR)	
* 185	3-392-925-01	ARM (A) ASSY, F.R	
* 186	3-392-939-01	ARM, FF	
* 187	3-392-934-01	ARM (B), F.R	
188	3-392-941-01	PULLEY (A), IDLE	
* 189	4-908-792-11	SCREW (B2X3), TAPPING, P1	
190	3-392-967-01	BELT, MAIN	
M901	X-3364-496-1	MOTOR ASSY	
S903	1-692-065-11	SWITCH, LEAF (MUTE/TAPE)	
S904	1-554-790-21	SWITCH, POWER (MUTE/POWER)	

www.manualscenter.com

AMPLIFIER

SECTION 7
ELECTRICAL PARTS LIST

NOTE:

- Due to standardization, replacements in the parts list may be different from the parts specified in the diagrams or the components used on the set.
- -XX and -X mean standardized parts, so they may have some difference from the original one.
- RESISTORS
  All resistors are in ohms.
  METAL:Metal-film resistor.
  METAL OXIDE: Metal oxide-film resistor.
  F:nonflammable
- Items marked "*" are not stocked since they are seldom required for routine service. Some delay should be anticipated when ordering these items.
- SEMICONDUCTORS
  In each case, u:μ, for example:
  uA ..: μA.. uPA..: μPA..
  uPB..: μPB.. uPC..: μPC.. uPD..: μPD..
- CAPACITORS
  uF: μF
- COILS
  uH: μH

When indicating parts by reference number, please include the board.

- 7040 : XR-7040
  7041 : XR-7041
  7042 : XR-7042
  U110 : XR-U110

Ref. No.	Part No.	Description				Remark
*	A-3295-348-A	AMPLIFIER BOARD, COMPLETE **********				
		< CAPACITOR >				
C601	1-126-162-11	ELECT	3.3uF	20%	50V	
C602	1-163-010-11	CERAMIC CHIP	0.0012uF	10%	50V	
C603	1-124-034-51	ELECT	33uF	20%	16V	
C604	1-136-167-00	FILM	0.15uF	5%	50V	
C605	1-136-167-00	FILM	0.15uF	5%	50V	
C611	1-126-162-11	ELECT	3.3uF	20%	50V	
C612	1-163-010-11	CERAMIC CHIP	0.0012uF	10%	50V	
C613	1-124-034-51	ELECT	33uF	20%	16V	
C614	1-136-167-00	FILM	0.15uF	5%	50V	
C615	1-136-167-00	FILM	0.15uF	5%	50V	
C631	1-163-009-11	CERAMIC CHIP	0.001uF	10%	50V	
C632	1-126-176-11	ELECT	220uF	20%	10V	
C633	1-124-343-00	ELECT	2200uF	20%	16V	
C634	1-126-176-11	ELECT	220uF	20%	10V	
C635	1-124-343-00	ELECT	2200uF	20%	16V	
C651	1-126-162-11	ELECT	3.3uF	20%	50V	
C652	1-163-010-11	CERAMIC CHIP	0.0012uF	10%	50V	
C653	1-124-034-51	ELECT	33uF	20%	16V	
C654	1-136-167-00	FILM	0.15uF	5%	50V	
C655	1-136-167-00	FILM	0.15uF	5%	50V	
C661	1-126-162-11	ELECT	3.3uF	20%	50V	
C662	1-163-010-11	CERAMIC CHIP	0.0012uF	10%	50V	
C663	1-124-034-51	ELECT	33uF	20%	16V	
C664	1-136-167-00	FILM	0.15uF	5%	50V	
C665	1-136-167-00	FILM	0.15uF	5%	50V	
		< CONNECTOR >				
CNJ4	1-580-279-11	SOCKET, CONNECTOR 16P				
		< JACK >				
CNJ601	1-691-683-51	JACK, PIN 4P (UNILINK IN AUDIO,LINE OUT)				
		< CONNECTOR >				
CNP6	1-695-244-21	PLUG, CINNECTOR 15P				

Ref. No.	Part No.	Description				Remark
		< DIODE >				
D681	8-719-200-82	DIODE	11ES2			
D682	8-719-945-59	DIODE	DSA3A4			
		< IC >				
IC631	8-759-243-27	IC	TA8215H			
IC632	8-759-243-27	IC	TA8215H			
		< TRANSISTOR >				
Q601	8-729-920-21	TRANSISTOR	DTC314TKH04			
Q611	8-729-920-21	TRANSISTOR	DTC314TKH04			
Q651	8-729-920-21	TRANSISTOR	DTC314TKH04			
Q661	8-729-920-21	TRANSISTOR	DTC314TKH04			
		< RESISTOR >				
R601	1-216-081-00	METAL CHIP	22K	5%	1/10W	
R602	1-216-117-00	METAL CHIP	680K	5%	1/10W	
R603	1-216-081-00	METAL CHIP	22K	5%	1/10W	
R604	1-216-067-00	METAL CHIP	5.6K	5%	1/10W	
R605	1-216-041-00	METAL CHIP	470	5%	1/10W	
R606	1-216-134-00	METAL GLAZE	2.2	5%	1/8W	
R607	1-216-134-00	METAL GLAZE	2.2	5%	1/8W	
R611	1-216-081-00	METAL CHIP	22K	5%	1/10W	
R612	1-216-117-00	METAL CHIP	680K	5%	1/10W	
R613	1-216-081-00	METAL CHIP	22K	5%	1/10W	
R614	1-216-067-00	METAL CHIP	5.6K	5%	1/10W	
R615	1-216-041-00	METAL CHIP	470	5%	1/10W	
R616	1-216-134-00	METAL GLAZE	2.2	5%	1/8W	
R617	1-216-134-00	METAL GLAZE	2.2	5%	1/8W	
R631	1-216-097-00	METAL CHIP	100K	5%	1/10W	
R632	1-216-097-00	METAL CHIP	100K	5%	1/10W	
R641	1-216-081-00	METAL CHIP	22K	5%	1/10W	
R651	1-216-081-00	METAL CHIP	22K	5%	1/10W	
R652	1-216-117-00	METAL CHIP	680K	5%	1/10W	
R653	1-216-081-00	METAL CHIP	22K	5%	1/10W	
R654	1-216-067-00	METAL CHIP	5.6K	5%	1/10W	
R655	1-216-041-00	METAL CHIP	470	5%	1/10W	
R656	1-216-134-00	METAL GLAZE	2.2	5%	1/8W	
R657	1-216-134-00	METAL GLAZE	2.2	5%	1/8W	

Ref.No.	Part No.	Description				Remark
R847	1-216-029-00	METAL CHIP	150	5%	1/10W	
R848	1-216-033-00	METAL CHIP	220	5%	1/10W	
R849	1-216-033-00	METAL CHIP	220	5%	1/10W	
R850	1-216-033-00	METAL CHIP	220	5%	1/10W	
R851	1-216-031-00	METAL CHIP	180	5%	1/10W	
R852	1-249-406-11	CARBON	120	5%	1/4W	
R853	1-249-406-11	CARBON	120	5%	1/4W	
R854	1-249-406-11	CARBON	120	5%	1/4W	
R855	1-249-406-11	CARBON	120	5%	1/4W	
R861	1-216-045-00	METAL CHIP	680	5%	1/10W	
R862	1-216-090-00	METAL CHIP	51K	5%	1/10W	
R891	1-216-295-00	METAL CHIP	0	5%	1/10W	
R892	1-216-073-00	METAL CHIP	10K	5%	1/10W	
R893	1-216-073-00	METAL CHIP	10K	5%	1/10W	
R894	1-216-073-00	METAL CHIP	10K	5%	1/10W	
		< SWITCH >				
S801	1-692-386-21	SWITCH (CD)				
S802	1-692-386-21	SWITCH (OFF)				
S803	1-692-386-21	SWITCH (FM/AM) (U110, 7040, 7042)				
S803	1-692-386-21	SWITCH (FM MW/LW) (7041)				
S804	1-692-386-21	SWITCH (BTM M.SCAN)				
S805	1-572-704-21	SWITCH, KEY BOARD (6)				
S806	1-572-704-21	SWITCH, KEY BOARD (SENS LOUD)				
S807	1-572-704-21	SWITCH, KEY BOARD (5)				
S808	1-572-704-21	SWITCH, KEY BOARD (PRESET DISC +)				
S809	1-572-704-21	SWITCH, KEY BOARD (ATA 4)				
S810	1-572-704-21	SWITCH, KEY BOARD (PRESET DISC -)				
S811	1-572-704-21	SWITCH, KEY BOARD (SHUF 3)				
S812	1-572-704-21	SWITCH, KEY BOARD (+)				
S813	1-572-704-21	SWITCH, KEY BOARD (REPEAT 2)				
S814	1-572-704-21	SWITCH, KEY BOARD (SEL)				
S815	1-572-704-21	SWITCH, KEY BOARD (INTRO 1)				
S816	1-572-704-21	SWITCH, KEY BOARD (-)				
S817	1-572-704-21	SWITCH, KEY BOARD (DSPL)				
S818	1-572-704-21	SWITCH, KEY BOARD (SEEK TRACK + ⏭)				
S819	1-572-704-21	SWITCH, KEY BOARD (SEEK TRACK - ⏮)				
S820	1-572-704-21	SWITCH, KEY BOARD (MUTE) (U110, 7040, 7041)				
S820	1-572-704-21	SWITCH, KEY BOARD (SDK) (7042)				

****

Ref.No.	Part No.	Description				Remark
*	A-3295-349-A	MAIN BOARD, COMPLETE (7041)				
*	A-3295-350-A	MAIN BOARD, COMPLETE (U110)				
*	A-3295-356-A	MAIN BOARD, COMPLETE (7040:AEP)				
*	A-3295-357-A	MAIN BOARD, COMPLETE (7040:E)				
*	A-3295-358-A	MAIN BOARD, COMPLETE (7042)				
		**********				
		< CAPACITOR >				
C1	1-163-097-00	CERAMIC CHIP	15PF	5%	50V	
C2	1-163-037-11	CERAMIC CHIP	0.022uF	10%	25V	
C3	1-124-463-00	ELECT	0.1uF	20%	50V	
C4	1-163-227-11	CERAMIC CHIP	10PF		50V	
C5	1-126-160-11	ELECT	1uF	20%	50V	
C6	1-163-037-11	CERAMIC CHIP	0.022uF	10%	25V	
C7	1-163-037-11	CERAMIC CHIP	0.022uF	10%	25V	
C8	1-126-160-11	ELECT	1uF	20%	50V	
C10	1-164-004-11	CERAMIC CHIP	0.1uF	10%	25V	
C11	1-164-004-11	CERAMIC CHIP	0.1uF	10%	25V	
C12	1-163-809-11	CERAMIC CHIP	0.047uF	10%	25V	
C13	1-163-809-11	CERAMIC CHIP	0.047uF	10%	25V	
C14	1-163-017-00	CERAMIC CHIP	0.0047uF	5%	50V	
C15	1-164-232-11	CERAMIC CHIP	0.01uF		50V	
C16	1-126-160-11	ELECT	1uF	20%	50V	
C17	1-163-037-11	CERAMIC CHIP	0.022uF	10%	25V	
C18	1-164-004-11	CERAMIC CHIP	0.1uF	10%	25V	
C19	1-163-237-11	CERAMIC CHIP	27PF	5%	50V	
C20	1-163-235-11	CERAMIC CHIP	22PF	5%	50V	
C21	1-126-160-11	ELECT	1uF	20%	50V	
C22	1-163-003-11	CERAMIC CHIP	330PF	10%	50V	
C23	1-164-004-11	CERAMIC CHIP	0.1uF	10%	25V	
C24	1-164-004-11	CERAMIC CHIP	0.1uF	10%	25V	
C25	1-163-809-11	CERAMIC CHIP	0.047uF	10%	25V	
C26	1-163-809-11	CERAMIC CHIP	0.047uF	10%	25V	
C27	1-126-157-11	ELECT	10uF	20%	16V	
C28	1-163-037-11	CERAMIC CHIP	0.022uF	10%	25V	
C29	1-163-809-11	CERAMIC CHIP	0.047uF	10%	25V	
C30	1-164-161-11	CERAMIC CHIP	0.0022uF	10%	100V	
C31	1-124-465-00	ELECT	0.47uF	20%	50V	
C32	1-126-160-11	ELECT	1uF	20%	50V	
C33	1-126-160-11	ELECT	1uF	20%	50V	
C34	1-164-004-11	CERAMIC CHIP	0.1uF	10%	25V	
C35	1-163-011-11	CERAMIC CHIP	0.0015uF	10%	50V	
C36	1-126-157-11	ELECT	10uF	20%	16V	
C37	1-164-004-11	CERAMIC CHIP	0.1uF	10%	25V	
C38	1-164-343-11	CERAMIC CHIP	0.056uF	10%	25V	
C39	1-126-160-11	ELECT	1uF	20%	50V	
C40	1-162-587-11	CERAMIC CHIP (U110)	0.039uF	10%	25V	
C40	1-163-986-00	CERAMIC CHIP (7040, 7041, 7042)	0.027uF	10%	25V	

www.manualscenter.com

Ref. No.	Part No.	Description				Remark
R662	1-216-117-00	METAL CHIP	680K	5%	1/10W	
R663	1-216-081-00	METAL CHIP	22K	5%	1/10W	
R664	1-216-067-00	METAL CHIP	5.6K	5%	1/10W	
R665	1-216-041-00	METAL CHIP	470	5%	1/10W	
R666	1-216-134-00	METAL GLAZE	2.2	5%	1/8W	
R667	1-216-134-00	METAL GLAZE	2.2	5%	1/8W	
		< THERMISTOR >				
THP682	1-809-148-11	THERMISTOR, POSITIVE 2.2				

****

*	A-3295-361-A	KEY BOARD, COMPLETE				
		**********				
*	3-357-087-01	HOLDER (LCD)				
*	3-387-815-01	PLATE (LCD), GROUND				
		< CAPACITOR >				
C801	1-163-007-11	CERAMIC CHIP	680PF	10%	50V	
C802	1-164-222-11	CERAMIC CHIP	0.22uF		25V	
C892	1-163-117-00	CERAMIC CHIP	100PF	5%	50V	
		< CONNECTOR >				
* CNP7	1-691-557-21	PIN, CONNECTOR 12P				
		< DIODE >				
D801	8-719-975-84	LED	AY1101W-88	(BTM M. SCAN)		
D802	8-719-975-84	LED	AY1101W-88	(OFF)		
D804	8-719-975-84	LED	AY1101W-88	(PRESET DISC +)		
D805	8-719-975-84	LED	AY1101W-88	(6)		
D806	8-719-975-84	LED	AY1101W-88	(SENS LOUD)		
D807	8-719-975-84	LED	AY1101W-88	(5)		
D808	8-719-975-84	LED	AY1101W-88	(PRESET DISC -)		
D809	8-719-975-84	LED	AY1101W-88	(ATA 4)		
D810	8-719-975-84	LED	AY1101W-88	(SHUF 3)		
D811	8-719-975-84	LED	AY1101W-88	(SEL)		
D812	8-719-975-84	LED	AY1101W-88	(+)		
D813	8-719-975-84	LED	AY1101W-88	(REPEAT 2)		
D814	8-719-975-84	LED	AY1101W-88	(INTRO 1)		
D815	8-719-975-84	LED	AY1101W-88	(-)		
D816	8-719-975-84	LED	AY1101W-88	(MUTE)		
		(U110, 7040, 7041)				
D816	8-719-975-84	LED	AY1101W-88	(SDK) (7042)		
D817	8-719-975-84	LED	AY1101W-88	(SEEK TRACK - ⏮)		
D819	8-719-975-84	LED	AY1101W-88	(SEEK TRACK + ⏭)		
D820	8-719-975-84	LED	AY1101W-88	(FM/AM)		
		(U110, 7040, 7042)				
D820	8-719-975-84	LED	AY1101W-88	(FM MW/LW) (7041)		
D821	8-719-975-84	LED	AY1101W-88	(CD)		

Ref. No.	Part No.	Description				Remark
D831	8-719-109-85	DIODE	RD5.1ES-B2			
D891	8-719-976-99	DIODE	DTZ5.1B			
		< IC >				
IC801	8-759-821-44	IC	LC7582			
		< LIQUID CRYSTAL DISPLAY >				
LCD801	1-810-020-11	DISPLAY PANEL, LIQUID CRYSTAL				
		< PILOT LAMP >				
PL801	1-517-156-11	LAMP, PILOT				
PL802	1-517-156-11	LAMP, PILOT				
		< RESISTOR >				
R801	1-216-649-11	METAL CHIP	820	0.5%	1/10W	
R802	1-216-649-11	METAL CHIP	820	0.5%	1/10W	
R803	1-216-651-11	METAL CHIP	1K	0.5%	1/10W	
R804	1-216-651-11	METAL CHIP	1K	0.5%	1/10W	
R805	1-216-653-11	METAL CHIP	1.2K	0.5%	1/10W	
R806	1-216-653-11	METAL CHIP	1.2K	0.5%	1/10W	
R807	1-216-655-11	METAL CHIP	1.5K	0.5%	1/10W	
R808	1-216-655-11	METAL CHIP	1.5K	0.5%	1/10W	
R809	1-216-657-11	METAL CHIP	1.8K	0.5%	1/10W	
R810	1-216-657-11	METAL CHIP	1.8K	0.5%	1/10W	
R811	1-216-659-11	METAL CHIP	2.2K	0.5%	1/10W	
R812	1-216-659-11	METAL CHIP	2.2K	0.5%	1/10W	
R813	1-216-662-11	METAL CHIP	3K	0.5%	1/10W	
R814	1-216-662-11	METAL CHIP	3K	0.5%	1/10W	
R815	1-216-667-11	METAL CHIP	4.7K	0.5%	1/10W	
R816	1-216-667-11	METAL CHIP	4.7K	0.5%	1/10W	
R817	1-216-670-11	METAL CHIP	6.2K	0.5%	1/10W	
R818	1-216-676-11	METAL CHIP	11K	0.5%	1/10W	
R831	1-216-033-00	METAL CHIP	220	5%	1/10W	
R832	1-216-033-00	METAL CHIP	220	5%	1/10W	
R833	1-216-031-00	METAL CHIP	180	5%	1/10W	
R834	1-216-029-00	METAL CHIP	150	5%	1/10W	
R835	1-216-029-00	METAL CHIP	150	5%	1/10W	
R836	1-216-033-00	METAL CHIP	220	5%	1/10W	
R837	1-216-029-00	METAL CHIP	150	5%	1/10W	
R838	1-216-029-00	METAL CHIP	150	5%	1/10W	
R839	1-216-033-00	METAL CHIP	220	5%	1/10W	
R840	1-216-029-00	METAL CHIP	150	5%	1/10W	
R841	1-216-029-00	METAL CHIP	150	5%	1/10W	
R842	1-216-033-00	METAL CHIP	220	5%	1/10W	
R843	1-216-029-00	METAL CHIP	150	5%	1/10W	
R844	1-216-029-00	METAL CHIP	150	5%	1/10W	
R845	1-216-033-00	METAL CHIP	220	5%	1/10W	
R846	1-216-029-00	METAL CHIP	150	5%	1/10W	

Ref. No.	Part No.	Description			Remark
C41	1-162-587-11	CERAMIC CHIP (U110)	0.039uF	10%	25V
C41	1-163-986-00	CERAMIC CHIP (7040, 7041, 7042)	0.027uF	10%	25V
C42	1-124-463-00	ELECT	0.1uF	20%	50V
C43	1-163-809-11	CERAMIC CHIP	0.047uF	10%	25V
C52	1-163-037-11	CERAMIC CHIP	0.022uF	10%	25V
C53	1-126-163-11	ELECT	4.7uF	20%	50V
C54	1-126-163-11	ELECT	4.7uF	20%	50V
C55	1-163-037-11	CERAMIC CHIP	0.022uF	10%	25V
C61	1-126-160-11	ELECT (7042)	1uF	20%	50V
C62	1-124-250-00	ELECT (7042)	0.15uF	20%	50V
C63	1-136-158-00	FILM (7042)	0.027uF	5%	50V
C64	1-136-161-00	FILM (7042)	0.047uF	5%	50V
C65	1-136-164-00	FILM (7042)	0.082uF	5%	50V
C66	1-130-477-00	FILM (7042)	0.0033uF	5%	50V
C67	1-126-163-11	ELECT (7042)	4.7uF	20%	50V
C68	1-136-163-00	FILM (7042)	0.068uF	5%	50V
C69	1-136-163-00	FILM (7042)	0.068uF	5%	50V
C70	1-124-250-00	ELECT (7042)	0.15uF	20%	50V
C71	1-124-463-00	ELECT (7042)	0.1uF	20%	50V
C72	1-163-245-11	CERAMIC CHIP (7042)	56PF	5%	50V
C81	1-163-117-00	CERAMIC CHIP	100PF	5%	50V
C82	1-163-009-11	CERAMIC CHIP	0.001uF	10%	50V
C83	1-163-117-00	CERAMIC CHIP	100PF	5%	50V
C84	1-164-004-11	CERAMIC CHIP	0.1uF	10%	25V
C85	1-163-097-00	CERAMIC CHIP	15PF	5%	50V
C86	1-163-097-00	CERAMIC CHIP	15PF	5%	50V
C88	1-163-009-11	CERAMIC CHIP	0.001uF	10%	50V
C89	1-163-117-00	CERAMIC CHIP	100PF	5%	50V
C101	1-163-010-11	CERAMIC CHIP	0.0012uF	10%	50V
C102	1-126-160-11	ELECT	1uF	20%	50V
C103	1-163-121-00	CERAMIC CHIP	150PF	5%	50V
C104	1-136-159-00	FILM	0.033uF	5%	50V
C105	1-124-434-00	ELECT	220uF	20%	4V
C111	1-124-463-00	ELECT	0.1uF	20%	50V
C112	1-126-157-11	ELECT	10uF	20%	16V
C113	1-163-097-00	CERAMIC CHIP	15PF	5%	50V
C114	1-163-237-11	CERAMIC CHIP	27PF	5%	50V

Ref. No.	Part No.	Description			Remark
C115	1-163-014-00	CERAMIC CHIP	0.0027uF	10%	50V
C116	1-164-343-11	CERAMIC CHIP	0.056uF	10%	25V
C117	1-164-343-11	CERAMIC CHIP	0.056uF	10%	25V
C118	1-126-157-11	ELECT	10uF	20%	16V
C119	1-126-157-11	ELECT	10uF	20%	16V
C120	1-164-182-11	CERAMIC CHIP	0.0033uF	10%	50V
C121	1-124-464-11	ELECT	0.22uF	20%	50V
C122	1-126-157-11	ELECT	10uF	20%	16V
C123	1-126-163-11	ELECT	4.7uF	20%	50V
C124	1-126-163-11	ELECT	4.7uF	20%	50V
C125	1-163-237-11	CERAMIC CHIP	27PF	5%	50V
C126	1-163-237-11	CERAMIC CHIP	27PF	5%	50V
C201	1-163-010-11	CERAMIC CHIP	0.0012uF	10%	50V
C202	1-126-160-11	ELECT	1uF	20%	50V
C203	1-163-121-00	CERAMIC CHIP	150PF	5%	50V
C204	1-136-159-00	FILM	0.033uF	5%	50V
C205	1-124-434-00	ELECT	220uF	20%	4V
C211	1-124-463-00	ELECT	0.1uF	20%	50V
C212	1-126-157-11	ELECT	10uF	20%	16V
C213	1-163-097-00	CERAMIC CHIP	15PF	5%	50V
C214	1-163-237-11	CERAMIC CHIP	27PF	5%	50V
C215	1-163-014-00	CERAMIC CHIP	0.0027uF	10%	50V
C216	1-164-343-11	CERAMIC CHIP	0.056uF	10%	25V
C217	1-164-343-11	CERAMIC CHIP	0.056uF	10%	25V
C218	1-126-157-11	ELECT	10uF	20%	16V
C219	1-126-157-11	ELECT	10uF	20%	16V
C220	1-164-182-11	CERAMIC CHIP	0.0033uF	10%	50V
C221	1-124-464-11	ELECT	0.22uF	20%	50V
C222	1-126-157-11	ELECT	10uF	20%	16V
C223	1-126-163-11	ELECT	4.7uF	20%	50V
C224	1-126-163-11	ELECT	4.7uF	20%	50V
C225	1-163-237-11	CERAMIC CHIP	27PF	5%	50V
C226	1-163-237-11	CERAMIC CHIP	27PF	5%	50V
C301	1-124-589-11	ELECT	47uF	20%	16V
C302	1-126-157-11	ELECT	10uF	20%	16V
C311	1-124-584-00	ELECT	100uF	20%	10V
C312	1-164-004-11	CERAMIC CHIP	0.1uF	10%	25V
C313	1-164-004-11	CERAMIC CHIP	0.1uF	10%	25V
C314	1-164-004-11	CERAMIC CHIP	0.1uF	10%	25V
C315	1-163-005-11	CERAMIC CHIP	470PF	10%	50V
C316	1-124-584-00	ELECT	100uF	20%	10V
C317	1-124-584-00	ELECT	100uF	20%	10V
C401	1-163-037-11	CERAMIC CHIP	0.022uF	10%	25V
C402	1-164-004-11	CERAMIC CHIP	0.1uF	10%	25V
C403	1-126-163-11	ELECT	4.7uF	20%	50V
C405	1-163-037-11	CERAMIC CHIP	0.022uF	10%	25V
C406	1-126-160-11	ELECT	1uF	20%	50V
C407	1-126-157-11	ELECT	10uF	20%	16V
C408	1-164-004-11	CERAMIC CHIP	0.1uF	10%	25V

MAIN

Ref. No.	Part No.	Description			Remark
C410	1-126-162-11	ELECT	3.3uF	20%	50V
C411	1-126-157-11	ELECT	10uF	20%	16V
C412	1-164-004-11	CERAMIC CHIP	0.1uF	10%	25V
C414	1-164-004-11	CERAMIC CHIP	0.1uF	10%	25V
C415	1-126-514-11	ELECT	22uF	20%	16V
C416	1-126-514-11	ELECT	22uF	20%	16V
C441	1-163-037-11	CERAMIC CHIP	0.022uF	10%	25V
C442	1-126-101-11	ELECT	100uF	20%	16V
C701	1-163-037-11	CERAMIC CHIP	0.022uF	10%	25V
C702	1-125-701-11	CAP, DOUBLE LAYER	0.047F		5.5V
C703	1-163-005-11	CERAMIC CHIP	470PF	10%	50V
C704	1-163-005-11	CERAMIC CHIP	470PF	10%	50V
C705	1-163-005-11	CERAMIC CHIP	470PF	10%	50V
C706	1-163-037-11	CERAMIC CHIP	0.022uF	10%	25V
C707	1-163-229-11	CERAMIC CHIP	12PF	5%	50V
C708	1-163-229-11	CERAMIC CHIP	12PF	5%	50V
C710	1-164-004-11	CERAMIC CHIP	0.1uF	10%	25V
C771	1-124-589-11	ELECT	47uF	20%	16V
C772	1-126-160-11	ELECT	1uF	20%	50V
C781	1-126-160-11	ELECT	1uF	20%	50V
C782	1-164-004-11	CERAMIC CHIP	0.1uF	10%	25V

< FILTER >

CF1	1-579-554-21	FILTER, CERAMIC	

< CONNECTOR >

CNJ3	1-573-122-11	SOCKET, CONNECTOR 12P	
CNP1	1-691-512-11	SOCKET, CONNECTOR (ANT)	
* CNP2	1-506-993-11	PIN, CONNECTOR (PC BOARD) 11P	
CNP4	1-580-277-11	PIN, CONNECTOR 16P	
CNP5	1-580-907-11	PLUG, CONNECTOR	

< DIODE >

D1	8-719-911-19	DIODE	1SS119
D2	8-719-911-19	DIODE	1SS119
D3	8-719-911-19	DIODE	1SS119
D5	8-719-911-19	DIODE	1SS119
D6	8-719-911-19	DIODE	1SS119
D7	8-719-911-19	DIODE	1SS119
D8	8-719-911-19	DIODE	1SS119
D61	8-719-911-19	DIODE	1SS119 (7042)
D301	8-719-911-19	DIODE	1SS119
D311	8-719-109-75	DIODE	RD4.3ES-B2
D312	8-719-109-75	DIODE	RD4.3ES-B2
D401	8-719-109-93	DIODE	RD6.2ES-B2
D402	8-719-911-19	DIODE	1SS119
D403	8-719-110-03	DIODE	RD7.5ES-B2
D404	8-719-200-82	DIODE	11ES2
D406	8-719-109-89	DIODE	RD5.6ES-B2
D407	8-719-110-13	DIODE	RD9.1ES-B2
D408	8-719-110-17	DIODE	RD10ES-B2
D441	8-719-911-19	DIODE	1SS119
D701	8-719-911-19	DIODE	1SS119
D702	8-719-911-19	DIODE	1SS119
D703	8-719-109-93	DIODE	RD6.2ES-B2
D704	8-719-109-93	DIODE	RD6.2ES-B2
D705	8-719-109-93	DIODE	RD6.2ES-B2
D706	8-719-109-93	DIODE	RD6.2ES-B2
D707	8-719-109-93	DIODE	RD6.2ES-B2
D708	8-719-109-93	DIODE	RD6.2ES-B2
D771	8-719-911-19	DIODE	1SS119
D772	8-719-109-69	DIODE	RD3.6ES-B2
D781	8-719-110-03	DIODE	RD7.5ES-B2
D782	8-719-109-93	DIODE	RD6.2ES-B2
D783	8-719-109-93	DIODE	RD6.2ES-B2
D901	8-719-911-19	DIODE	1SS119

< IC >

IC1	8-759-090-30	IC	TA2027F
IC61	8-759-998-24	IC	TDA1579T (7042)
IC81	8-759-823-81	IC	LC7216M
IC111	8-759-096-19	IC	RC4558DR-A
IC112	8-759-096-19	IC	RC4558DR-A
IC113	8-759-096-19	IC	RC4558DR-A
IC211	8-759-096-19	IC	RC4558DR-A
IC212	8-759-096-19	IC	RC4558DR-A
IC213	8-759-096-19	IC	RC4558DR-A
IC301	8-759-046-31	IC	BA328F
IC302	8-759-932-64	IC	BU4052BF
IC311	8-759-820-15	IC	LC7537AN
IC401	8-759-097-36	IC	RH5VA40AA
IC701	8-759-169-91	IC	uPD75518GF-096-3B9
IC781	8-759-096-16	IC	MM1175XF-T1

< JUMPER RESISTOR >

JR1	1-216-295-00	METAL CHIP	0	5%	1/10W
JR2	1-216-295-00	METAL CHIP	0	5%	1/10W

< INDUCTOR >

L1	1-410-316-11	INDUCTOR	1uH
L2	1-410-324-11	INDUCTOR	4.7uH
L3	1-410-513-11	INDUCTOR	22uH
L4	1-410-312-11	INDUCTOR	0.22uH
L5	1-410-513-11	INDUCTOR	22uH
L6	1-410-501-11	INDUCTOR	2.2uH
L61	1-424-036-11	COIL (FILTER)	(7042)
L81	1-410-513-11	INDUCTOR	22uH

Ref. No.	Part No.	Description				Remark
L82	1-410-501-11	INDUCTOR	2.2uH			
		< TRANSISTOR >				
Q1	8-729-207-56	TRANSISTOR	RN1402			
Q51	8-729-016-76	TRANSISTOR	2SC2412KLN-E			
Q52	8-729-016-76	TRANSISTOR	2SC2412KLN-E			
Q401	8-729-920-85	TRANSISTOR	2SD1664-QR			
Q402	8-729-230-49	TRANSISTOR	2SC2712-YG			
Q405	8-729-106-60	TRANSISTOR	2SB1115A			
Q406	8-729-207-56	TRANSISTOR	RN1402			
Q407	8-729-920-85	TRANSISTOR	2SD1664-QR			
Q408	8-729-822-84	TRANSISTOR	2SB1202FAST			
Q409	8-729-207-56	TRANSISTOR	RN1402			
Q410	8-729-820-68	TRANSISTOR	2SD1802FA-S			
Q411	8-729-205-02	TRANSISTOR	2SA1150			
Q412	8-729-216-22	TRANSISTOR	2SA1162-G			
Q413	8-729-017-27	TRANSISTOR	RN1411-TE85L			
Q414	8-729-230-49	TRANSISTOR	2SC2712-YG			
Q415	8-729-216-22	TRANSISTOR	2SA1162-G			
Q416	8-729-207-56	TRANSISTOR	RN1402			
Q441	8-729-106-60	TRANSISTOR	2SB1115A			
Q442	8-729-207-56	TRANSISTOR	RN1402			
Q701	8-729-230-49	TRANSISTOR	2SC2712-YG			
Q702	8-729-207-56	TRANSISTOR	RN1402			
Q703	8-729-207-56	TRANSISTOR	RN1402			
Q704	8-729-207-68	TRANSISTOR	RN2402			
Q771	8-729-207-68	TRANSISTOR	RN2402			
Q772	8-729-207-56	TRANSISTOR	RN1402			
		< RESISTOR >				
R1	1-216-067-00	METAL CHIP	5.6K	5%	1/10W	
R2	1-216-041-00	METAL CHIP	470	5%	1/10W	
R4	1-216-061-00	METAL CHIP	3.3K	5%	1/10W	
R5	1-216-025-00	METAL CHIP	100	5%	1/10W	
R6	1-216-005-00	METAL CHIP	15	5%	1/10W	
R7	1-216-073-00	METAL CHIP	10K	5%	1/10W	
R8	1-216-069-00	METAL CHIP	6.8K	5%	1/10W	
R9	1-216-089-00	METAL CHIP	47K	5%	1/10W	
R10	1-216-073-00	METAL CHIP	10K	5%	1/10W	
R11	1-216-081-00	METAL CHIP	22K	5%	1/10W	
R12	1-216-073-00	METAL CHIP	10K	5%	1/10W	
R13	1-216-039-00	METAL CHIP	390	5%	1/10W	
R14	1-216-090-00	METAL CHIP	51K	5%	1/10W	
R15	1-216-046-00	METAL CHIP	750	5%	1/10W	
R16	1-216-053-00	METAL CHIP	1.5K	5%	1/10W	
R17	1-216-057-00	METAL CHIP	2.2K	5%	1/10W	
R18	1-216-077-00	METAL CHIP	15K	5%	1/10W	
R19	1-216-061-00	METAL CHIP	3.3K	5%	1/10W	
R20	1-216-005-00	METAL CHIP	15	5%	1/10W	

Ref. No.	Part No.	Description				Remark
R21	1-216-073-00	METAL CHIP	10K	5%	1/10W	
R22	1-216-083-00	METAL CHIP	27K	5%	1/10W	
R23	1-216-073-00	METAL CHIP	10K	5%	1/10W	
R24	1-216-065-00	METAL CHIP	4.7K	5%	1/10W	
R25	1-216-077-00	METAL CHIP	15K	5%	1/10W	
R26	1-216-073-00	METAL CHIP	10K	5%	1/10W	
R27	1-216-055-00	METAL CHIP	1.8K	5%	1/10W	
R28	1-216-055-00	METAL CHIP	1.8K	5%	1/10W	
R29	1-216-093-00	METAL CHIP	68K	5%	1/10W	
R30	1-216-093-00	METAL CHIP	68K	5%	1/10W	
R31	1-216-083-00	METAL CHIP	27K	5%	1/10W	
		(7040, 7041, 7042)				
R31	1-216-086-00	METAL GLAZE	36K	5%	1/10W	(U110)
R32	1-216-058-00	METAL GLAZE	2.4K	5%	1/10W	
R33	1-216-079-00	METAL CHIP	18K	5%	1/10W	(U110)
R34	1-216-069-00	METAL CHIP	6.8K	5%	1/10W	
R35	1-216-061-00	METAL CHIP	3.3K	5%	1/10W	
R36	1-216-005-00	METAL CHIP	15	5%	1/10W	
R37	1-216-025-00	METAL CHIP	100	5%	1/10W	(7042)
R37	1-216-295-00	METAL CHIP	0	5%	1/10W	
		(U110, 7040, 7041)				
R38	1-216-105-00	METAL CHIP	220K	5%	1/10W	
R39	1-216-073-00	METAL CHIP	10K	5%	1/10W	
R51	1-216-005-00	METAL CHIP	15	5%	1/10W	
R52	1-216-051-00	METAL CHIP	1.2K	5%	1/10W	
R53	1-216-049-00	METAL CHIP	1K	5%	1/10W	
R54	1-216-053-00	METAL CHIP	1.5K	5%	1/10W	
R55	1-216-073-00	METAL CHIP	10K	5%	1/10W	
R61	1-216-005-00	METAL CHIP	15	5%	1/10W	(7042)
R62	1-216-097-00	METAL CHIP	100K	5%	1/10W	(7042)
R63	1-216-085-00	METAL CHIP	33K	5%	1/10W	(7042)
R64	1-216-117-00	METAL CHIP	680K	5%	1/10W	(7042)
R65	1-216-097-00	METAL CHIP	100K	5%	1/10W	(7042)
R66	1-216-083-00	METAL CHIP	27K	5%	1/10W	(7042)
R67	1-216-093-00	METAL CHIP	68K	5%	1/10W	(7042)
R68	1-216-065-00	METAL CHIP	4.7K	5%	1/10W	(7042)
R69	1-216-097-00	METAL CHIP	100K	5%	1/10W	(7042)
R70	1-216-041-00	METAL CHIP	470	5%	1/10W	(7042)
R71	1-216-117-00	METAL CHIP	680K	5%	1/10W	(7042)
R72	1-216-105-00	METAL CHIP	220K	5%	1/10W	(7042)
R73	1-216-089-00	METAL CHIP	47K	5%	1/10W	(7042)
R81	1-216-073-00	METAL CHIP	10K	5%	1/10W	
R83	1-216-057-00	METAL CHIP	2.2K	5%	1/10W	
R85	1-216-057-00	METAL CHIP	2.2K	5%	1/10W	
R101	1-216-091-00	METAL CHIP	56K	5%	1/10W	
R102	1-216-097-00	METAL CHIP	100K	5%	1/10W	
R103	1-216-062-00	METAL CHIP	3.6K	5%	1/10W	
R104	1-216-013-00	METAL CHIP	33	5%	1/10W	
R105	1-216-049-00	METAL CHIP	1K	5%	1/10W	

MAIN

Ref. No.	Part No.	Description				Remark
R111	1-216-121-00	METAL CHIP	1M	5%	1/10W	
R112	1-216-079-00	METAL CHIP	18K	5%	1/10W	
R113	1-216-089-00	METAL CHIP	47K	5%	1/10W	
R114	1-216-073-00	METAL CHIP	10K	5%	1/10W	
R115	1-216-061-00	METAL CHIP	3.3K	5%	1/10W	
R116	1-216-077-00	METAL CHIP	15K	5%	1/10W	
R117	1-216-121-00	METAL CHIP	1M	5%	1/10W	
R118	1-216-121-00	METAL CHIP	1M	5%	1/10W	
R119	1-216-121-00	METAL CHIP	1M	5%	1/10W	
R120	1-216-049-00	METAL CHIP	1K	5%	1/10W	
R121	1-216-049-00	METAL CHIP	1K	5%	1/10W	
R122	1-216-085-00	METAL CHIP	33K	5%	1/10W	
R123	1-216-077-00	METAL CHIP	15K	5%	1/10W	
R124	1-216-085-00	METAL CHIP	33K	5%	1/10W	
R125	1-216-077-00	METAL CHIP	15K	5%	1/10W	
R201	1-216-091-00	METAL CHIP	56K	5%	1/10W	
R202	1-216-097-00	METAL CHIP	100K	5%	1/10W	
R203	1-216-062-00	METAL CHIP	3.6K	5%	1/10W	
R204	1-216-013-00	METAL CHIP	33	5%	1/10W	
R205	1-216-049-00	METAL CHIP	1K	5%	1/10W	
R211	1-216-121-00	METAL CHIP	1M	5%	1/10W	
R212	1-216-079-00	METAL CHIP	18K	5%	1/10W	
R213	1-216-089-00	METAL CHIP	47K	5%	1/10W	
R214	1-216-073-00	METAL CHIP	10K	5%	1/10W	
R215	1-216-061-00	METAL CHIP	3.3K	5%	1/10W	
R216	1-216-077-00	METAL CHIP	15K	5%	1/10W	
R217	1-216-121-00	METAL CHIP	1M	5%	1/10W	
R218	1-216-121-00	METAL CHIP	1M	5%	1/10W	
R219	1-216-121-00	METAL CHIP	1M	5%	1/10W	
R220	1-216-049-00	METAL CHIP	1K	5%	1/10W	
R221	1-216-049-00	METAL CHIP	1K	5%	1/10W	
R222	1-216-085-00	METAL CHIP	33K	5%	1/10W	
R223	1-216-077-00	METAL CHIP	15K	5%	1/10W	
R224	1-216-085-00	METAL CHIP	33K	5%	1/10W	
R225	1-216-077-00	METAL CHIP	15K	5%	1/10W	
R301	1-216-005-00	METAL CHIP	15	5%	1/10W	
R302	1-216-005-00	METAL CHIP	15	5%	1/10W	
R311	1-216-097-00	METAL CHIP	100K	5%	1/10W	
R313	1-216-057-00	METAL CHIP	2.2K	5%	1/10W	
R314	1-216-057-00	METAL CHIP	2.2K	5%	1/10W	
R315	1-216-057-00	METAL CHIP	2.2K	5%	1/10W	
R316	1-216-057-00	METAL CHIP	2.2K	5%	1/10W	
R317	1-216-049-00	METAL CHIP	1K	5%	1/10W	
R318	1-216-049-00	METAL CHIP	1K	5%	1/10W	
R321	1-216-005-00	METAL CHIP	15	5%	1/10W	
R322	1-216-005-00	METAL CHIP	15	5%	1/10W	
R331	1-216-067-00	METAL CHIP	5.6K	5%	1/10W	
R332	1-216-067-00	METAL CHIP	5.6K	5%	1/10W	
R333	1-216-075-00	METAL CHIP	12K	5%	1/10W	
R334	1-216-075-00	METAL CHIP	12K	5%	1/10W	
R351	1-216-097-00	METAL CHIP	100K	5%	1/10W	
R352	1-216-097-00	METAL CHIP	100K	5%	1/10W	
R401	1-249-395-11	CARBON	15	5%	1/4W	
R402	1-216-061-00	METAL CHIP	3.3K	5%	1/10W	
R403	1-216-089-00	METAL CHIP	47K	5%	1/10W	
R404	1-216-083-00	METAL CHIP	27K	5%	1/10W	
R405	1-216-089-00	METAL CHIP	47K	5%	1/10W	
R406	1-216-097-00	METAL CHIP	100K	5%	1/10W	
R412	1-216-089-00	METAL CHIP	47K	5%	1/10W	
R413	1-216-049-00	METAL CHIP	1K	5%	1/10W	
R414	1-216-057-00	METAL CHIP	2.2K	5%	1/10W	
R415	1-216-041-00	METAL CHIP	470	5%	1/10W	
R416	1-216-049-00	METAL CHIP	1K	5%	1/10W	
R417	1-216-057-00	METAL CHIP	2.2K	5%	1/10W	
R418	1-216-041-00	METAL CHIP	470	5%	1/10W	
R419	1-216-081-00	METAL CHIP	22K	5%	1/10W	
R420	1-216-057-00	METAL CHIP	2.2K	5%	1/10W	
R421	1-216-069-00	METAL CHIP	6.8K	5%	1/10W	
R422	1-216-041-00	METAL CHIP	470	5%	1/10W	
R423	1-216-089-00	METAL CHIP	47K	5%	1/10W	
R424	1-216-049-00	METAL CHIP	1K	5%	1/10W	
R425	1-216-057-00	METAL CHIP	2.2K	5%	1/10W	
R443	1-216-065-00	METAL CHIP	4.7K	5%	1/10W	
R444	1-216-057-00	METAL CHIP	2.2K	5%	1/10W	
R445	1-216-097-00	METAL CHIP	100K	5%	1/10W	
R446	1-216-097-00	METAL CHIP	100K	5%	1/10W	
R447	1-216-097-00	METAL CHIP	100K	5%	1/10W	
R448	1-249-389-11	CARBON	4.7	5%	1/4W	
R449	1-249-389-11	CARBON	4.7	5%	1/4W	
R450	1-216-049-00	METAL CHIP	1K	5%	1/10W	
R701	1-216-089-00	METAL CHIP	47K	5%	1/10W	
R702	1-216-089-00	METAL CHIP	47K	5%	1/10W	
R703	1-216-049-00	METAL CHIP	1K	5%	1/10W	
R704	1-216-049-00	METAL CHIP	1K	5%	1/10W	
R705	1-216-049-00	METAL CHIP	1K	5%	1/10W	
R706	1-216-049-00	METAL CHIP	1K	5%	1/10W	
R707	1-216-089-00	METAL CHIP	47K	5%	1/10W	
R708	1-216-097-00	METAL CHIP	100K	5%	1/10W	
R711	1-216-109-00	METAL CHIP	330K	5%	1/10W	
R712	1-216-089-00	METAL CHIP	47K	5%	1/10W	(7041)
R712	1-216-097-00	METAL CHIP	100K	5%	1/10W	(7042)
R712	1-216-101-00	METAL CHIP (7040:AEP)	150K	5%	1/10W	
R713	1-216-089-00	METAL CHIP (7040:AEP)	47K	5%	1/10W	
R713	1-216-097-00	METAL CHIP (U110, 7040:E, 7042)	100K	5%	1/10W	
R713	1-216-101-00	METAL CHIP	150K	5%	1/10W	(7041)

Ref. No.	Part No.	Description	Remark
R714	1-216-097-00	METAL CHIP 100K 5% 1/10W	
R715	1-216-025-00	METAL CHIP 100 5% 1/10W	
R716	1-216-025-00	METAL CHIP 100 5% 1/10W	
R717	1-216-675-11	METAL CHIP 10K 0.5% 1/10W	
R718	1-216-675-11	METAL CHIP 10K 0.5% 1/10W	
R719	1-216-081-00	METAL CHIP 22K 5% 1/10W	
R720	1-216-097-00	METAL CHIP 100K 5% 1/10W	
R721	1-216-089-00	METAL CHIP 47K 5% 1/10W	
R722	1-216-089-00	METAL CHIP 47K 5% 1/10W	
R724	1-216-049-00	METAL CHIP 1K 5% 1/10W	
R725	1-216-049-00	METAL CHIP 1K 5% 1/10W	
R726	1-216-049-00	METAL CHIP 1K 5% 1/10W	
R727	1-216-049-00	METAL CHIP 1K 5% 1/10W	
R728	1-216-049-00	METAL CHIP 1K 5% 1/10W	
R731	1-216-097-00	METAL CHIP 100K 5% 1/10W (7040:E)	
R732	1-216-097-00	METAL CHIP 100K 5% 1/10W (U110, 7040:AEP, 7041, 7042)	
R733	1-216-105-00	METAL CHIP 220K 5% 1/10W (7040:E)	
R734	1-216-105-00	METAL CHIP 220K 5% 1/10W	
R735	1-216-295-00	METAL CHIP 0 5% 1/10W (7040:E)	
R751	1-216-097-00	METAL CHIP 100K 5% 1/10W	
R771	1-216-057-00	METAL CHIP 2.2K 5% 1/10W	
R781	1-216-005-00	METAL CHIP 15 5% 1/10W	
R782	1-216-025-00	METAL CHIP 100 5% 1/10W	
R783	1-216-025-00	METAL CHIP 100 5% 1/10W	
		< VARIABLE RESISTOR >	
RV1	1-238-600-11	RES, ADJ, CARBON 10K	
RV2	1-238-600-11	RES, ADJ, CARBON 10K (7040, 7041, 7042)	
RV2	1-238-601-11	RES, ADJ, CARBON 22K (U110)	
RV61	1-238-595-11	RES, ADJ, CARBON 220 (7042)	
		< SWITCH >	
S701	1-571-478-11	SWITCH, SLIDE (POWER SELECT) (U110, 7040:AEP, 7041, 7042)	
S701	1-571-478-11	SWITCH, SLIDE (9k/10k) (7040:E)	
		< TRANSFORMER >	
T1	1-404-955-11	TRANSFORMER, IF	
		< TUNER UNIT >	
TU1	1-693-000-21	TUNER UNIT (FAE313-A02) (FM/AM) (U110, 7040, 7042)	
TU1	1-693-001-11	TUNER UNIT (FAE313-E01) (FM/MW/LW) (7041)	

Ref. No.	Part No.	Description	Remark
		< VIBRATOR >	
X1	1-579-278-11	VIBRATOR, CERAMIC (456kHz)	
X81	1-567-848-11	VIBRATOR, CRYSTAL (7.2MHz)	
X701	1-579-886-21	VIBRATOR, CRYSTAL (32.768kHz)	
X702	1-567-776-21	VIBRATOR, CERAMIC (6MHz)	

****

*	1-646-958-11	RESET BOARD	
		**********	
		< CONNECTOR >	
* CNJ7	1-691-558-11	SOCKET, CONNECTOR 12P	
CNP3	1-573-121-11	PIN, CONNECTOR 12P	
		< SWITCH >	
S871	1-570-909-11	SWITCH, TACTIL (REFLOW TYPE) (RESET)	
S872	1-692-366-11	SWITCH, PUSH (NOSE DET)	

****

		MISCELLANEOUS	
		**********	
F901	1-532-678-11	FUSE, GLASS TUBE (12A)	
F902	1-532-360-XX	FUSE, GLASS TUBE (1A) (30mm) (U110)	
F902	1-532-452-XX	FUSE, GLASS TUBE (1A) (22mm) (7040, 7041, 7042)	
HP901	1-543-717-11	HEAD, MAGNETIC (PLAYBACK)	
M901	X-3364-496-1	MOTOR ASSY	
S901	1-692-036-11	SWITCH, SLIDE (HEAD SELECT)	
S903	1-692-065-11	SWITCH, LEAF (MUTE/TAPE)	
S904	1-554-790-21	SWITCH, POWER (MUTE/POWER)	

****

www.manualscenter.com

Ref. No.	Part No.	Description	Remark
		ACCESSORIES & PACKING MATERIALS	
		**********	
*	3-378-800-01	CUSHION (UPPER)	
*	3-378-801-01	CUSHION (LOWER)	
*	3-387-920-01	INDIVIDUAL CARTON (U110, 7040)	
*	3-387-922-01	INDIVIDUAL CARTON (7041)	
*	3-387-924-01	INDIVIDUAL CARTON (7042)	
	3-756-486-11	MANUAL, INSTRUCTION (ENGLISH, FRENCH, DUTCH) (7040:AEP, 7041)	
	3-756-486-21	MANUAL, INSTRUCTION (ENGLISH, FRENCH) (U110)	
	3-756-486-41	MANUAL, INSTRUCTION (SPANISH, SWEDISH, ITALIAN, PORTUGUESE) (7040:AEP)	
	3-756-486-51	MANUAL, INSTRUCTION (ENGLISH, FRENCH, GERMAN, ITALIAN) (7042)	
	3-756-486-61	MANUAL, INSTRUCTION (ENGLISH, SPANISH, CHINESE) (7040:E)	
	3-756-487-11	MANUAL, INSTRUCTION, INSTALL (ENGLISH, FRENCH, DUTCH) (7040:AEP, 7041)	
	3-756-487-21	MANUAL, INSTRUCTION, INSTALL (ENGLISH, FRENCH) (U110)	
	3-756-487-41	MANUAL, INSTRUCTION, INSTALL (SPANISH, SWEDISH, ITALIAN, PORTUGUESE) (7040:AEP)	
	3-756-487-51	MANUAL, INSTRUCTION, INSTALL (ENGLISH, FRENCH, GERMAN, ITALIAN) (7042)	
	3-756-487-61	MANUAL, INSTRUCTION, INSTALL (ENGLISH, SPANISH, CHINESE) (7040:E)	
	X-3364-977-1	CASE ASSY	

****

MOUNTING HARDWARE

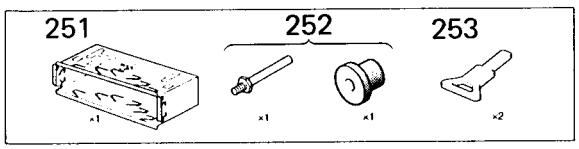

* 251	X-3366-235-1	FRAME ASSY, FITTING	
252	X-3366-405-1	SCREW ASSY (EXP), FITTING	
* 253	3-379-363-01	KEY	

Ref. No.	Part No.	Description	Remark
		**********	
		HARDWARE LIST	
		**********	
#1	7-685-106-19	SCREW +P 2X10 TYPE2 NON-SLIT	
#2	7-621-772-10	SCREW +B 2X4	
#3	7-621-773-95	SCREW +PTT 2.6X6 (S) (U110, 7040:E, 7041, 7042)	
#4	7-621-770-67	SCREW +PTT 2.6X6 (S)	
#5	7-621-770-XX	SCREW +PTT 2.6X8 (S)	
#6	7-685-134-19	SCREW +P 2.6X8 TYPE2 NON-SLIT	
#7	7-621-555-10	SCREW +K 2X3	
#8	7-621-591-00	SCREW +K 2X4	
#9	7-624-102-04	STOP RING 1.5, TYPE -E	
#10	7-624-104-04	STOP RING 2.0, TYPE -E	
#11	7-624-118-01	RING, RETAINING E-2.5	
#12	7-627-553-88	SCREW, PRECISION +P 2X7	
#13	7-621-775-08	SCREW +P 2.6X3	
#14	7-621-255-15	SCREW +P 2X3	
#15	7-621-255-20	SCREW +P 2X4	
#16	7-621-255-25	SCREW +PTT 2X4 (S)	

9-957-564-11

Sony Corporation
Mobile Electronics Group

English
93A0478-1
Printed in Japan
© 1993. 1

Published by Audio Corporate Planning Group

XR-7040/7041/7042/U110

SONY
SERVICE MANUAL

US Model
Canadian Model
XR-U110

AEP Model
XR-7040/7041

E Model
XR-7040

German Model
XR-7042

CORRECTION-1

Correct your service manual as shown below.

☛ : **indicates corrected portion.**

Page	INCORRECT			CORRECT		
	Ref.No.	Part No.	Description	Ref.No.	Part No.	Description
39	59	3-384-641-11	PANEL, FRONT (U110, 7040)	59	3-384-641-11	PANEL, FRONT (U110) ☛
				59	3-384-641-71	PANEL, FRONT (7040) ☛

(SPM-95020)

www.manualscenter.com

9-957-564-91

Sony Corporation
Mobile Electronics Company

English
95F0464-1
Printed in Japan
© 1995.6
Published by Home A&V Products Div. Quality Engineering Dept.

XR-7040/7041/7042/U110

SONY®
SERVICE MANUAL

US Model
Canadian Model
XR-U110
AEP Model
XR-7040/7041
E Model
XR-7040
German Model
XR-7042

SUPPLEMENT-1

File this supplement with the service manual.

1. **Change the Printed Wiring Boards**
2. **Correction**

www.manualscenter.com

AMPLIFIER

ELECTRICAL PARTS LIST

NOTE:

- Due to standardization, replacements in the parts list may be different from the parts specified in the diagrams or the components used on the set.
- -XX and -X mean standardized parts, so they may have some difference from the original one.
- RESISTORS
  All resistors are in ohms.
  METAL:Metal-film resistor.
  METAL OXIDE: Metal oxide-film resistor.
  F:nonflammable
- Items marked "*" are not stocked since they are seldom required for routine service. Some delay should be anticipated when ordering these items.
- SEMICONDUCTORS
  In each case, u:μ, for example:
  uA..: μA.. uPA..: μPA..
  uPB..: μPB.. uPC..: μPC.. uPD..: μPD..
- CAPACITORS
  uF: μF
- COILS
  uH: μH

When indicating parts by reference number, please include the board.

Ref. No.	Part No.	Description				Remark
*	A-3295-348-A	AMPLIFIER BOARD, COMPLETE **********				
		< CAPACITOR >				
C601	1-126-162-11	ELECT	3.3uF	20%	50V	
C602	1-163-010-11	CERAMIC CHIP	0.0012uF	10%	50V	
C603	1-124-034-51	ELECT	33uF	20%	16V	
C604	1-136-167-00	FILM	0.15uF	5%	50V	
C605	1-136-167-00	FILM	0.15uF	5%	50V	
C611	1-126-162-11	ELECT	3.3uF	20%	50V	
C612	1-163-010-11	CERAMIC CHIP	0.0012uF	10%	50V	
C613	1-124-034-51	ELECT	33uF	20%	16V	
C614	1-136-167-00	FILM	0.15uF	5%	50V	
C615	1-136-167-00	FILM	0.15uF	5%	50V	
C631	1-163-009-11	CERAMIC CHIP	0.001uF	10%	50V	
C632	1-126-176-11	ELECT	220uF	20%	10V	
C633	1-126-768-11	ELECT	2200uF	20%	16V	
C634	1-126-176-11	ELECT	220uF	20%	10V	
C635	1-126-768-11	ELECT	2200uF	20%	16V	
C651	1-126-162-11	ELECT	3.3uF	20%	50V	
C652	1-163-010-11	CERAMIC CHIP	0.0012uF	10%	50V	
C653	1-124-034-51	ELECT	33uF	20%	16V	
C654	1-136-167-00	FILM	0.15uF	5%	50V	
C655	1-136-167-00	FILM	0.15uF	5%	50V	
C661	1-126-162-11	ELECT	3.3uF	20%	50V	
C662	1-163-010-11	CERAMIC CHIP	0.0012uF	10%	50V	
C663	1-124-034-51	ELECT	33uF	20%	16V	
C664	1-136-167-00	FILM	0.15uF	5%	50V	
C665	1-136-167-00	FILM	0.15uF	5%	50V	
C997-999	1-163-037-11	CERAMIC CHIP	0.022uF	10%	25V	
		< CONNECTOR >				
* CNJ4	1-580-279-11	SOCKET, CONNECTOR 16P				
* CNP6	1-695-244-21	PLUG, CONNECTOR 15P				
		< JACK >				
CNJ601	1-691-683-51	JACK, PIN 4P (UNILINK IN AUDIO, LINE OUT)				

Ref. No.	Part No.	Description				Remark
		< DIODE >				
D681	8-719-200-82	DIODE	11ES2			
D682	8-719-945-59	DIODE	DSA3A4			
		< IC >				
IC631	8-759-243-27	IC	TA8215H			
IC632	8-759-243-27	IC	TA8215H			
		< TRANSISTOR >				
Q601	8-729-920-21	TRANSISTOR	DTC314TKH04			
Q611	8-729-920-21	TRANSISTOR	DTC314TKH04			
Q651	8-729-920-21	TRANSISTOR	DTC314TKH04			
Q661	8-729-920-21	TRANSISTOR	DTC314TKH04			
		< RESISTOR >				
R601	1-216-081-00	METAL CHIP	22K	5%	1/10W	
R602	1-216-117-00	METAL CHIP	680K	5%	1/10W	
R603	1-216-081-00	METAL CHIP	22K	5%	1/10W	
R604	1-216-067-00	METAL CHIP	5.6K	5%	1/10W	
R605	1-216-041-00	METAL CHIP	470	5%	1/10W	
R606	1-216-134-00	METAL CHIP	2.2	5%	1/8W	
R607	1-216-134-00	METAL CHIP	2.2	5%	1/8W	
R611	1-216-081-00	METAL CHIP	22K	5%	1/10W	
R612	1-216-117-00	METAL CHIP	680K	5%	1/10W	
R613	1-216-081-00	METAL CHIP	22K	5%	1/10W	
R614	1-216-067-00	METAL CHIP	5.6K	5%	1/10W	
R615	1-216-041-00	METAL CHIP	470	5%	1/10W	
R616	1-216-134-00	METAL CHIP	2.2	5%	1/8W	
R617	1-216-134-00	METAL CHIP	2.2	5%	1/8W	
R631	1-216-097-00	METAL CHIP	100K	5%	1/10W	
R632	1-216-097-00	METAL CHIP	100K	5%	1/10W	
R641	1-216-081-00	METAL CHIP	22K	5%	1/10W	
R651	1-216-081-00	METAL CHIP	22K	5%	1/10W	
R652	1-216-117-00	METAL CHIP	680K	5%	1/10W	
R653	1-216-081-00	METAL CHIP	22K	5%	1/10W	
R654	1-216-067-00	METAL CHIP	5.6K	5%	1/10W	
R655	1-216-041-00	METAL CHIP	470	5%	1/10W	
R656	1-216-134-00	METAL CHIP	2.2	5%	1/8W	
R657	1-216-134-00	METAL CHIP	2.2	5%	1/8W	
R662	1-216-117-00	METAL CHIP	680K	5%	1/10W	

www.manualscenter.com

Ref. No.	Part No.	Description				Remark
R663	1-216-081-00	METAL CHIP	22K	5%	1/10W	
R664	1-216-067-00	METAL CHIP	5.6K	5%	1/10W	
R665	1-216-041-00	METAL CHIP	470	5%	1/10W	
R666	1-216-134-00	METAL CHIP	2.2	5%	1/8W	
R667	1-216-134-00	METAL CHIP	2.2	5%	1/8W	
R991	1-216-295-00	METAL CHIP	0	5%	1/10W	
R992	1-216-295-00	METAL CHIP	0	5%	1/10W	
		< THERMISTOR(POSITIVE) >				
THP682	1-809-148-11	THERMISTOR, POSITIVE				

****

Ref. No.	Part No.	Description				Remark
*	A-3295-361-A	KEY BOARD, COMPLETE				
		**********				
*	3-357-087-01	HOLDER (LCD)				
*	3-377-631-21	SHEET (REFLECTOR)				
*	3-387-815-01	PLATE (LCD), GROUND				
*	3-389-489-01	SPACER (CONNECTOR)				
		< CAPACITOR >				
C801	1-163-007-11	CERAMIC CHIP	680PF	10%	50V	
C802	1-164-222-11	CERAMIC CHIP	0.22uF		25V	
C892	1-163-117-00	CERAMIC CHIP	100PF	5%	50V	
		< CONNECTOR >				
* CNP7	1-691-557-21	PIN, CONNECTOR 12P				
		< DIODE >				
D801	8-719-975-84	LED AY1101W-88 (BTM M.SCAN)				
D802	8-719-975-84	LED AY1101W-88 (OFF)				
D804	8-719-975-84	LED AY1101W-88 (PRESET DISC +)				
D805	8-719-975-84	LED AY1101W-88 (6)				
D806	8-719-975-84	LED AY1101W-88 (SENS LOUD)				
D807	8-719-975-84	LED AY1101W-88 (5)				
D808	8-719-975-84	LED AY1101W-88 (PRESET DISC -)				
D809	8-719-975-84	LED AY1101W-88 (ATA 4)				
D810	8-719-975-84	LED AY1101W-88 (SHUF 3)				
D811	8-719-975-84	LED AY1101W-88 (SEL)				
D812	8-719-975-84	LED AY1101W-88 (+)				
D813	8-719-975-84	LED AY1101W-88 (REPEAT 2)				
D814	8-719-975-84	LED AY1101W-88 (INTRO 1)				
D815	8-719-975-84	LED AY1101W-88 (-)				
D816	8-719-975-84	LED AY1101W-88 (MUTE) (EXCEPT XR-7042)				
D816	8-719-975-84	LED AY1101W-88 (SDK) (XR-7042)				
D817	8-719-975-84	LED AY1101W-88 (SEEK TRACK - ⏮)				
D819	8-719-975-84	LED AY1101W-88 (SEEK TRACK + ⏭)				
D820	8-719-975-84	LED AY1101W-88 (FM/AM) (EXCEPT XR-7041)				
D820	8-719-975-84	LED AY1101W-88 (FM MW/LW) (XR-7041)				
D821	8-719-975-84	LED AY1101W-88 (CD)				
D831	8-719-109-85	DIODE RD5.1ES-B2				
D891	8-719-105-82	DIODE RD5.1M-B2				
		< IC >				
IC801	8-759-821-44	IC LC7582				
		< LIQUID CRYSTAL DISPLAY >				
LCD801	1-810-020-11	DISPLAY PANEL, LIQUID CRYSTAL				
		< PILOT LAMP >				
PL801	1-517-156-11	LAMP, PILOT				
PL802	1-517-156-11	LAMP, PILOT				
		< RESISTOR >				
R801	1-216-649-11	METAL CHIP	820	0.5%	1/10W	
R802	1-216-649-11	METAL CHIP	820	0.5%	1/10W	
R803	1-216-651-11	METAL CHIP	1K	0.5%	1/10W	
R804	1-216-651-11	METAL CHIP	1K	0.5%	1/10W	
R805	1-216-653-11	METAL CHIP	1.2K	0.5%	1/10W	
R806	1-216-653-11	METAL CHIP	1.2K	0.5%	1/10W	
R807	1-216-655-11	METAL CHIP	1.5K	0.5%	1/10W	
R808	1-216-655-11	METAL CHIP	1.5K	0.5%	1/10W	
R809	1-216-657-11	METAL CHIP	1.8K	0.5%	1/10W	
R810	1-216-657-11	METAL CHIP	1.8K	0.5%	1/10W	
R811	1-216-659-11	METAL CHIP	2.2K	0.5%	1/10W	
R812	1-216-659-11	METAL CHIP	2.2K	0.5%	1/10W	
R813	1-216-662-11	METAL CHIP	3K	0.5%	1/10W	
R814	1-216-662-11	METAL CHIP	3K	0.5%	1/10W	
R815	1-216-667-11	METAL CHIP	4.7K	0.5%	1/10W	
R816	1-216-667-11	METAL CHIP	4.7K	0.5%	1/10W	
R817	1-216-670-11	METAL CHIP	6.2K	0.5%	1/10W	
R818	1-216-676-11	METAL CHIP	11K	0.5%	1/10W	
R831	1-216-033-00	METAL CHIP	220	5%	1/10W	
R832	1-216-033-00	METAL CHIP	220	5%	1/10W	
R833	1-216-031-00	METAL CHIP	180	5%	1/10W	
R834	1-216-029-00	METAL CHIP	150	5%	1/10W	
R835	1-216-029-00	METAL CHIP	150	5%	1/10W	
R836	1-216-033-00	METAL CHIP	220	5%	1/10W	
R837	1-216-029-00	METAL CHIP	150	5%	1/10W	
R838	1-216-029-00	METAL CHIP	150	5%	1/10W	
R839	1-216-033-00	METAL CHIP	220	5%	1/10W	
R840	1-216-029-00	METAL CHIP	150	5%	1/10W	
R841	1-216-029-00	METAL CHIP	150	5%	1/10W	
R842	1-216-033-00	METAL CHIP	220	5%	1/10W	
R843	1-216-029-00	METAL CHIP	150	5%	1/10W	
R844	1-216-029-00	METAL CHIP	150	5%	1/10W	
R845	1-216-033-00	METAL CHIP	220	5%	1/10W	

KEY **MAIN**

Ref. No.	Part No.	Description			Remark
R846	1-216-029-00	METAL CHIP	150	5%	1/10W
R847	1-216-029-00	METAL CHIP	150	5%	1/10W
R848-850					
	1-216-033-00	METAL CHIP	220	5%	1/10W
R851	1-216-031-00	METAL CHIP	180	5%	1/10W
R852-855					
	1-249-403-11	CARBON	68	5%	1/4W
R861	1-216-045-00	METAL CHIP	680	5%	1/10W
R862	1-216-090-00	METAL CHIP	51K	5%	1/10W
R892-894					
	1-216-073-00	METAL CHIP	10K	5%	1/10W

< SWITCH >

S801	1-692-386-21	SWITCH (CD)
S802	1-692-386-21	SWITCH (OFF)
S803	1-692-386-21	SWITCH (FM/AM) (EXCEPT XR-7041)
S803	1-692-386-21	SWITCH (FM MW/LW) (XR-7041)
S804	1-692-386-21	SWITCH (BTM M. SCAN)
S805	1-572-704-21	SWITCH, KEY BOARD (6)
S806	1-572-704-21	SWITCH, KEY BOARD (SENS LOUD)
S807	1-572-704-21	SWITCH, KEY BOARD (5)
S808	1-572-704-21	SWITCH, KEY BOARD (PRESET DISC +)
S809	1-572-704-21	SWITCH, KEY BOARD (ATA 4)
S810	1-572-704-21	SWITCH, KEY BOARD (PRESET DISC -)
S811	1-572-704-21	SWITCH, KEY BOARD (SHUF 3)
S812	1-572-704-21	SWITCH, KEY BOARD (+)
S813	1-572-704-21	SWITCH, KEY BOARD (REPEAT 2)
S814	1-572-704-21	SWITCH, KEY BOARD (SEL)
S815	1-572-704-21	SWITCH, KEY BOARD (INTRO 1)
S816	1-572-704-21	SWITCH, KEY BOARD (-)
S817	1-572-704-21	SWITCH, KEY BOARD (DSPL)
S818	1-572-704-21	SWITCH, KEY BOARD (SEEK TRACK + ⏭)
S819	1-572-704-21	SWITCH, KEY BOARD (SEEK TRACK - ⏮)
S820	1-572-704-21	SWITCH, KEY BOARD (MUTE) (EXCEPT XR-7042)
S820	1-572-704-21	SWITCH, KEY BOARD (SDK) (XR-7042)

****

*	A-3295-349-A	MAIN BOARD, COMPLETE (XR-7041)
*	A-3295-350-A	MAIN BOARD, COMPLETE (XR-U110)
*	A-3295-356-A	MAIN BOARD, COMPLETE (XR-7040:AEP)
*	A-3295-357-A	MAIN BOARD, COMPLETE (XR-7040:E)
*	A-3295-358-A	MAIN BOARD, COMPLETE (XR-7042)

****

< CAPACITOR >

Ref. No.	Part No.	Description			
C1	1-163-097-00	CERAMIC CHIP	15PF	5%	50V
C2	1-163-037-11	CERAMIC CHIP	0.022uF	10%	25V
C3	1-124-463-00	ELECT	0.1uF	20%	50V
C4	1-163-227-11	CERAMIC CHIP	10PF	0.5PF	50V
C5	1-126-160-11	ELECT	1uF	20%	50V
C6	1-163-037-11	CERAMIC CHIP	0.022uF	10%	25V
C7	1-163-037-11	CERAMIC CHIP	0.022uF	10%	25V
C8	1-126-160-11	ELECT	1uF	20%	50V
C10	1-164-004-11	CERAMIC CHIP	0.1uF	10%	25V
C11	1-164-004-11	CERAMIC CHIP	0.1uF	10%	25V
C12	1-163-809-11	CERAMIC CHIP	0.047uF	10%	25V
C13	1-163-809-11	CERAMIC CHIP	0.047uF	10%	25V
C14	1-163-017-00	CERAMIC CHIP	0.0047uF	5%	50V
C15	1-164-232-11	CERAMIC CHIP	0.01uF		50V
C16	1-126-160-11	ELECT	1uF	20%	50V
C17	1-163-037-11	CERAMIC CHIP	0.022uF	10%	25V
C18	1-164-004-11	CERAMIC CHIP	0.1uF	10%	25V
C19	1-163-237-11	CERAMIC CHIP	27PF	5%	50V
C20	1-163-235-11	CERAMIC CHIP	22PF	5%	50V
C21	1-126-160-11	ELECT	1uF	20%	50V
C22	1-163-003-11	CERAMIC CHIP	330PF	10%	50V
C23	1-164-004-11	CERAMIC CHIP	0.1uF	10%	25V
C24	1-164-004-11	CERAMIC CHIP	0.1uF	10%	25V
C25	1-163-809-11	CERAMIC CHIP	0.047uF	10%	25V
C26	1-163-809-11	CERAMIC CHIP	0.047uF	10%	25V
C27	1-126-157-11	ELECT	10uF	20%	16V
C28	1-163-037-11	CERAMIC CHIP	0.022uF	10%	25V
C29	1-163-809-11	CERAMIC CHIP	0.047uF	10%	25V
C30	1-164-161-11	CERAMIC CHIP	0.0022uF	10%	100V
C31	1-124-465-00	ELECT	0.47uF	20%	50V
C32	1-126-160-11	ELECT	1uF	20%	50V
C33	1-126-160-11	ELECT	1uF	20%	50V
C34	1-164-004-11	CERAMIC CHIP	0.1uF	10%	25V
C35	1-163-011-11	CERAMIC CHIP	0.0015uF	10%	50V
C36	1-126-157-11	ELECT	10uF	20%	16V
C37	1-164-004-11	CERAMIC CHIP	0.1uF	10%	25V
C38	1-164-343-11	CERAMIC CHIP	0.056uF	10%	25V
C39	1-126-160-11	ELECT	1uF	20%	50V
C40	1-162-587-11	CERAMIC CHIP (XR-U110)	0.039uF	10%	25V
C40	1-163-986-00	CERAMIC CHIP (EXCEPT XR-U110)	0.027uF	10%	25V
C41	1-162-587-11	CERAMIC CHIP (XR-U110)	0.039uF	10%	25V
C41	1-163-986-00	CERAMIC CHIP (EXCEPT XR-U110)	0.027uF	10%	25V
C42	1-124-463-00	ELECT	0.1uF	20%	50V
C43	1-163-809-11	CERAMIC CHIP	0.047uF	10%	25V
C52	1-163-037-11	CERAMIC CHIP	0.022uF	10%	25V
C53	1-126-163-11	ELECT	4.7uF	20%	50V
C54	1-126-163-11	ELECT	4.7uF	20%	50V
C55	1-163-037-11	CERAMIC CHIP	0.022uF	10%	25V
C61	1-126-160-11	ELECT (XR-7042)	1uF	20%	50V

www.manualscenter.com

Ref. No.	Part No.	Description			Remark
C62	1-124-250-00	ELECT (XR-7042)	0.15uF	20%	50V
C63	1-136-158-00	FILM (XR-7042)	0.027uF	5%	50V
C64	1-136-161-00	FILM (XR-7042)	0.047uF	5%	50V
C65	1-136-164-00	FILM (XR-7042)	0.082uF	5%	50V
C66	1-130-477-00	MYLAR (XR-7042)	0.0033uF	5%	50V
C67	1-126-163-11	ELECT (XR-7042)	4.7uF	20%	50V
C68	1-136-163-00	FILM (XR-7042)	0.068uF	5%	50V
C69	1-136-163-00	FILM (XR-7042)	0.068uF	5%	50V
C70	1-124-250-00	ELECT (XR-7042)	0.15uF	20%	50V
C71	1-124-463-00	ELECT (XR-7042)	0.1uF	20%	50V
C72	1-163-245-11	CERAMIC CHIP (XR-7042)	56PF	5%	50V
C81	1-163-117-00	CERAMIC CHIP	100PF	5%	50V
C82	1-163-009-11	CERAMIC CHIP	0.001uF	10%	50V
C83	1-163-117-00	CERAMIC CHIP	100PF	5%	50V
C84	1-164-004-11	CERAMIC CHIP	0.1uF	10%	25V
C85	1-163-097-00	CERAMIC CHIP	15PF	5%	50V
C86	1-163-097-00	CERAMIC CHIP	15PF	5%	50V
C88	1-163-009-11	CERAMIC CHIP	0.001uF	10%	50V
C89	1-163-117-00	CERAMIC CHIP	100PF	5%	50V
C99	1-216-295-00	METAL CHIP	0 5%	1/10W	
C101	1-163-010-11	CERAMIC CHIP	0.0012uF	10%	50V
C102	1-126-160-11	ELECT	1uF	20%	50V
C103	1-163-121-00	CERAMIC CHIP	150PF	5%	50V
C104	1-136-159-00	FILM	0.033uF	5%	50V
C105	1-124-434-00	ELECT	220uF	20%	4V
C111	1-124-463-00	ELECT	0.1uF	20%	50V
C112	1-126-157-11	ELECT	10uF	20%	16V
C113	1-163-097-00	CERAMIC CHIP	15PF	5%	50V
C114	1-163-237-11	CERAMIC CHIP	27PF	5%	50V
C115	1-163-014-00	CERAMIC CHIP	0.0027uF	10%	50V
C116	1-164-343-11	CERAMIC CHIP	0.056uF	10%	25V
C117	1-164-343-11	CERAMIC CHIP	0.056uF	10%	25V
C118	1-126-157-11	ELECT	10uF	20%	16V
C119	1-126-157-11	ELECT	10uF	20%	16V
C120	1-164-182-11	CERAMIC CHIP	0.0033uF	10%	50V
C121	1-124-464-11	ELECT	0.22uF	20%	50V
C122	1-126-157-11	ELECT	10uF	20%	16V
C123	1-126-163-11	ELECT	4.7uF	20%	50V
C124	1-126-163-11	ELECT	4.7uF	20%	50V
C125	1-163-237-11	CERAMIC CHIP	27PF	5%	50V

Ref. No.	Part No.	Description			Remark
C126	1-163-237-11	CERAMIC CHIP	27PF	5%	50V
C201	1-163-010-11	CERAMIC CHIP	0.0012uF	10%	50V
C202	1-126-160-11	ELECT	1uF	20%	50V
C203	1-163-121-00	CERAMIC CHIP	150PF	5%	50V
C204	1-136-159-00	FILM	0.033uF	5%	50V
C205	1-124-434-00	ELECT	220uF	20%	4V
C211	1-124-463-00	ELECT	0.1uF	20%	50V
C212	1-126-157-11	ELECT	10uF	20%	16V
C213	1-163-097-00	CERAMIC CHIP	15PF	5%	50V
C214	1-163-237-11	CERAMIC CHIP	27PF	5%	50V
C215	1-163-014-00	CERAMIC CHIP	0.0027uF	10%	50V
C216	1-164-343-11	CERAMIC CHIP	0.056uF	10%	25V
C217	1-164-343-11	CERAMIC CHIP	0.056uF	10%	25V
C218	1-126-157-11	ELECT	10uF	20%	16V
C219	1-126-157-11	ELECT	10uF	20%	16V
C220	1-164-182-11	CERAMIC CHIP	0.0033uF	10%	50V
C221	1-124-464-11	ELECT	0.22uF	20%	50V
C222	1-126-157-11	ELECT	10uF	20%	16V
C223	1-126-163-11	ELECT	4.7uF	20%	50V
C224	1-126-163-11	ELECT	4.7uF	20%	50V
C225	1-163-237-11	CERAMIC CHIP	27PF	5%	50V
C226	1-163-237-11	CERAMIC CHIP	27PF	5%	50V
C301	1-124-589-11	ELECT	47uF	20%	16V
C302	1-126-157-11	ELECT	10uF	20%	16V
C311	1-124-584-00	ELECT	100uF	20%	10V
C312-314	1-164-004-11	CERAMIC CHIP	0.1uF	10%	25V
C315	1-163-005-11	CERAMIC CHIP	470PF	10%	50V
C316	1-124-584-00	ELECT	100uF	20%	10V
C317	1-124-584-00	ELECT	100uF	20%	10V
C333	1-124-779-00	ELECT CHIP	10uF	20%	16V
C334	1-124-779-00	ELECT CHIP	10uF	20%	16V
C401	1-163-037-11	CERAMIC CHIP	0.022uF	10%	25V
C402	1-164-004-11	CERAMIC CHIP	0.1uF	10%	25V
C403	1-126-163-11	ELECT	4.7uF	20%	50V
C405	1-163-037-11	CERAMIC CHIP	0.022uF	10%	25V
C406	1-126-160-11	ELECT	1uF	20%	50V
C407	1-126-157-11	ELECT	10uF	20%	16V
C408	1-164-004-11	CERAMIC CHIP	0.1uF	10%	25V
C410	1-126-162-11	ELECT	3.3uF	20%	50V
C411	1-126-157-11	ELECT	10uF	20%	16V
C412	1-164-004-11	CERAMIC CHIP	0.1uF	10%	25V
C414	1-164-004-11	CERAMIC CHIP	0.1uF	10%	25V
C415	1-126-514-11	ELECT	22uF	20%	16V
C416	1-126-514-11	ELECT	22uF	20%	16V
C441	1-163-037-11	CERAMIC CHIP	0.022uF	10%	25V
C442	1-126-101-11	ELECT	100uF	20%	16V
C701	1-163-037-11	CERAMIC CHIP	0.022uF	10%	25V
C702	1-125-701-11	DOUBLE LAYER	0.047F		5.5V

MAIN

Ref. No.	Part No.	Description				Remark
C703-705						
	1-163-005-11	CERAMIC CHIP	470PF	10%	50V	
C706	1-163-037-11	CERAMIC CHIP	0.022uF	10%	25V	
C707	1-163-229-11	CERAMIC CHIP	12PF	5%	50V	
C708	1-163-229-11	CERAMIC CHIP	12PF	5%	50V	
C710	1-164-004-11	CERAMIC CHIP	0.1uF	10%	25V	
C771	1-124-589-11	ELECT	47uF	20%	16V	
C772	1-126-160-11	ELECT	1uF	20%	50V	
C781	1-126-160-11	ELECT	1uF	20%	50V	
C782	1-164-004-11	CERAMIC CHIP	0.1uF	10%	25V	
		< FILTER >				
CF1	1-579-554-21	FILTER, CERAMIC				
		< CONNECTOR >				
* CNJ3	1-573-122-21	SOCKET, CONNECTOR 12P				
CNP1	1-691-512-11	SOCKET, CONNECTOR (ANT)				
* CNP2	1-506-993-11	PIN, CONNECTOR (PC BOARD) 11P				
* CNP4	1-580-277-21	PIN, CONNECTOR 16P				
CNP5	1-580-907-11	PLUG, CONNECTOR				
		< DIODE >				
D1	8-719-911-19	DIODE	1SS119			
D2	8-719-911-19	DIODE	1SS119			
D3	8-719-911-19	DIODE	1SS119			
D5	8-719-911-19	DIODE	1SS119			
D6	8-719-911-19	DIODE	1SS119			
D7	8-719-911-19	DIODE	1SS119			
D8	8-719-911-19	DIODE	1SS119			
D61	8-719-404-46	DIODE	MA110 (XR-7042)			
D301	8-719-911-19	DIODE	1SS119			
D311	8-719-109-75	DIODE	RD4.3ES-B2			
D312	8-719-109-75	DIODE	RD4.3ES-B2			
D401	8-719-109-93	DIODE	RD6.2ES-B2			
D402	8-719-911-19	DIODE	1SS119			
D403	8-719-110-03	DIODE	RD7.5ES-B2			
D404	8-719-200-82	DIODE	11ES2			
D406	8-719-109-89	DIODE	RD5.6ES-B2			
D407	8-719-110-13	DIODE	RD9.1ES-B2			
D408	8-719-110-16	DIODE	RD10ES-B1			
D441	8-719-911-19	DIODE	1SS119			
D701	8-719-911-19	DIODE	1SS119			
D702	8-719-911-19	DIODE	1SS119			
D703	8-719-109-93	DIODE	RD6.2ES-B2			
D704	8-719-109-93	DIODE	RD6.2ES-B2			
D705	8-719-109-93	DIODE	RD6.2ES-B2			
D706	8-719-109-93	DIODE	RD6.2ES-B2			
D707	8-719-109-93	DIODE	RD6.2ES-B2			
D708	8-719-109-93	DIODE	RD6.2ES-B2			

Ref. No.	Part No.	Description				Remark
D771	8-719-911-19	DIODE	1SS119			
D772	8-719-017-82	DIODE	MA8036			
D781	8-719-110-03	DIODE	RD7.5ES-B2			
D782	8-719-109-93	DIODE	RD6.2ES-B2			
D783	8-719-109-93	DIODE	RD6.2ES-B2			
D892	8-719-106-08	DIODE	RD6.2M-B2			
D893	8-719-976-99	DIODE	DTZ5.1B			
D894	8-719-976-99	DIODE	DTZ5.1B			
D901	8-719-911-19	DIODE	1SS119			
		< IC >				
IC1	8-759-090-30	IC	TA2027F			
IC61	8-759-998-24	IC	TDA1579T (XR-7042)			
IC81	8-759-823-81	IC	LC7216M			
IC111-113						
	8-759-096-19	IC	RC4558DR-A			
IC211-213						
	8-759-096-19	IC	RC4558DR-A			
IC301	8-759-046-31	IC	BA328F			
IC302	8-759-932-64	IC	BU4052BF			
IC311	8-759-820-15	IC	LC7537AN			
IC401	8-759-097-36	IC	RH5VA40AA			
IC701	8-759-169-91	IC	UPD75518GF-096-3B9			
IC781	8-759-096-16	IC	MM1175XFF			
		< JUMPER RESISTOR >				
JR1	1-216-295-00	METAL CHIP	0	5%	1/10W	
JR2	1-216-295-00	METAL CHIP	0	5%	1/10W	
		< COIL >				
L1	1-410-316-11	INDUCTOR	1uH			
L2	1-410-324-11	INDUCTOR	4.7uH			
L3	1-410-513-11	INDUCTOR	22uH			
L4	1-410-312-11	INDUCTOR	0.22uH			
L5	1-410-513-11	INDUCTOR	22uH			
L6	1-410-501-11	INDUCTOR	2.2uH			
L61	1-424-036-21	COIL (FILTER)	(XR-7042)			
L81	1-410-513-11	INDUCTOR	22uH			
L82	1-410-501-11	INDUCTOR	2.2uH			
		< TRANSISTOR >				
Q1	8-729-207-56	TRANSISTOR	RN1402			
Q51	8-729-016-79	TRANSISTOR	2SC2412KLN-T146-E			
Q52	8-729-016-79	TRANSISTOR	2SC2412KLN-T146-E			
Q401	8-729-920-85	TRANSISTOR	2SD1664-QR			
Q402	8-729-230-49	TRANSISTOR	2SC2712-YG			
Q405	8-729-106-60	TRANSISTOR	2SB1115A-YQ			
Q406	8-729-207-56	TRANSISTOR	RN1402			
Q407	8-729-920-85	TRANSISTOR	2SD1664-QR			

Ref. No.	Part No.	Description				Remark
Q408	8-729-822-84	TRANSISTOR	2SB1202FAST			
Q409	8-729-207-56	TRANSISTOR	RN1402			
Q410	8-729-820-68	TRANSISTOR	2SD1802FA-S			
Q411	8-729-205-02	TRANSISTOR	2SA1150-Y			
Q412	8-729-216-22	TRANSISTOR	2SA1162-G			
Q413	8-729-207-66	TRANSISTOR	RN1411			
Q414	8-729-230-49	TRANSISTOR	2SC2712-YG			
Q415	8-729-216-22	TRANSISTOR	2SA1162-G			
Q416	8-729-207-56	TRANSISTOR	RN1402			
Q441	8-729-106-60	TRANSISTOR	2SB1115A-YQ			
Q442	8-729-207-56	TRANSISTOR	RN1402			
Q701	8-729-230-49	TRANSISTOR	2SC2712-YG			
Q702	8-729-207-56	TRANSISTOR	RN1402			
Q703	8-729-207-56	TRANSISTOR	RN1402			
Q704	8-729-207-68	TRANSISTOR	RN2402			
Q771	8-729-207-68	TRANSISTOR	RN2402			
Q772	8-729-207-56	TRANSISTOR	RN1402			
		< RESISTOR >				
R1	1-216-067-00	METAL CHIP	5.6K	5%	1/10W	
R2	1-216-041-00	METAL CHIP	470	5%	1/10W	
R4	1-216-061-00	METAL CHIP	3.3K	5%	1/10W	
R5	1-216-025-00	METAL CHIP	100	5%	1/10W	
R6	1-216-005-00	METAL CHIP	15	5%	1/10W	
R7	1-216-073-00	METAL CHIP	10K	5%	1/10W	
R8	1-216-069-00	METAL CHIP	6.8K	5%	1/10W	
R9	1-216-089-00	METAL GLAZE	47K	5%	1/10W	
R10	1-216-073-00	METAL CHIP	10K	5%	1/10W	
R11	1-216-081-00	METAL CHIP	22K	5%	1/10W	
R12	1-216-073-00	METAL CHIP	10K	5%	1/10W	
R13	1-216-039-00	METAL CHIP	390	5%	1/10W	
R14	1-216-090-00	METAL CHIP	51K	5%	1/10W	
R15	1-216-046-00	METAL CHIP	750	5%	1/10W	
R16	1-216-053-00	METAL CHIP	1.5K	5%	1/10W	
R17	1-216-057-00	METAL GLAZE	2.2K	5%	1/10W	
R18	1-216-077-00	METAL CHIP	15K	5%	1/10W	
R19	1-216-061-00	METAL CHIP	3.3K	5%	1/10W	
R20	1-216-005-00	METAL CHIP	15	5%	1/10W	
R21	1-216-073-00	METAL CHIP	10K	5%	1/10W	
R22	1-216-069-00	METAL CHIP (XR-7042)	6.8K	5%	1/10W	
R22	1-216-077-00	METAL CHIP (XR-7040, XR-7041)	15K	5%	1/10W	
R22	1-216-083-00	METAL CHIP (XR-U110)	27K	5%	1/10W	
R23	1-216-073-00	METAL CHIP	10K	5%	1/10W	
R24	1-216-066-00	METAL CHIP	5.1K	5%	1/10W	
R25	1-216-077-00	METAL CHIP	15K	5%	1/10W	
R26	1-216-073-00	METAL CHIP	10K	5%	1/10W	

Ref. No.	Part No.	Description				Remark
R27	1-216-055-00	METAL CHIP	1.8K	5%	1/10W	
R28	1-216-055-00	METAL CHIP	1.8K	5%	1/10W	
R29	1-216-093-00	METAL CHIP	68K	5%	1/10W	
R30	1-216-093-00	METAL CHIP	68K	5%	1/10W	
R31	1-216-083-00	METAL CHIP (EXCEPT XR-U110)	27K	5%	1/10W	
R31	1-216-086-00	METAL GLAZE (XR-U110)	36K	5%	1/10W	
R32	1-216-058-00	METAL GLAZE	2.4K	5%	1/10W	
R33	1-216-079-00	METAL CHIP (XR-7040:E, XR-U110)	18K	5%	1/10W	
R34	1-216-069-00	METAL CHIP	6.8K	5%	1/10W	
R35	1-216-061-00	METAL CHIP	3.3K	5%	1/10W	
R36	1-216-005-00	METAL CHIP	15	5%	1/10W	
R37	1-216-025-00	METAL CHIP (XR-7042)	100	5%	1/10W	
R37	1-216-295-00	METAL CHIP (EXCEPT XR-7042)	0	5%	1/10W	
R38	1-216-105-00	METAL CHIP	220K	5%	1/10W	
R39	1-216-073-00	METAL CHIP	10K	5%	1/10W	
R51	1-216-295-00	METAL CHIP	0	5%	1/10W	
R52	1-216-051-00	METAL CHIP	1.2K	5%	1/10W	
R53	1-216-049-00	METAL CHIP	1K	5%	1/10W	
R54	1-216-053-00	METAL CHIP	1.5K	5%	1/10W	
R55	1-216-073-00	METAL CHIP	10K	5%	1/10W	
R61	1-216-005-00	METAL CHIP (XR-7042)	15	5%	1/10W	
R62	1-216-097-00	METAL CHIP (XR-7042)	100K	5%	1/10W	
R63	1-216-085-00	METAL CHIP (XR-7042)	33K	5%	1/10W	
R64	1-216-117-00	METAL CHIP (XR-7042)	680K	5%	1/10W	
R65	1-216-097-00	METAL CHIP (XR-7042)	100K	5%	1/10W	
R66	1-216-083-00	METAL CHIP (XR-7042)	27K	5%	1/10W	
R67	1-216-093-00	METAL CHIP (XR-7042)	68K	5%	1/10W	
R68	1-216-065-00	METAL CHIP (XR-7042)	4.7K	5%	1/10W	
R69	1-216-097-00	METAL CHIP (XR-7042)	100K	5%	1/10W	
R70	1-216-041-00	METAL CHIP (XR-7042)	470	5%	1/10W	
R71	1-216-117-00	METAL CHIP (XR-7042)	680K	5%	1/10W	
R72	1-216-105-00	METAL CHIP (XR-7042)	220K	5%	1/10W	
R73	1-216-089-00	METAL GLAZE (XR-7042)	47K	5%	1/10W	
R81	1-216-073-00	METAL CHIP	10K	5%	1/10W	

Ref. No.	Part No.	Description			Remark
R83	1-216-057-00	METAL GLAZE	2.2K	5%	1/10W
R85	1-216-057-00	METAL GLAZE	2.2K	5%	1/10W
R101	1-216-091-00	METAL CHIP	56K	5%	1/10W
R102	1-216-097-00	METAL CHIP	100K	5%	1/10W
R103	1-216-062-00	METAL CHIP	3.6K	5%	1/10W
R104	1-216-013-00	METAL CHIP	33	5%	1/10W
R105	1-216-049-00	METAL CHIP	1K	5%	1/10W
R111	1-216-121-00	METAL CHIP	1M	5%	1/10W
R112	1-216-079-00	METAL CHIP	18K	5%	1/10W
R113	1-216-089-00	METAL GLAZE	47K	5%	1/10W
R114	1-216-073-00	METAL CHIP	10K	5%	1/10W
R115	1-216-061-00	METAL CHIP	3.3K	5%	1/10W
R116	1-216-077-00	METAL CHIP	15K	5%	1/10W
R117-119					
	1-216-121-00	METAL CHIP	1M	5%	1/10W
R120	1-216-049-00	METAL CHIP	1K	5%	1/10W
R121	1-216-049-00	METAL CHIP	1K	5%	1/10W
R122	1-216-085-00	METAL CHIP	33K	5%	1/10W
R123	1-216-077-00	METAL CHIP	15K	5%	1/10W
R124	1-216-085-00	METAL CHIP	33K	5%	1/10W
R125	1-216-077-00	METAL CHIP	15K	5%	1/10W
R201	1-216-091-00	METAL CHIP	56K	5%	1/10W
R202	1-216-097-00	METAL CHIP	100K	5%	1/10W
R203	1-216-062-00	METAL CHIP	3.6K	5%	1/10W
R204	1-216-013-00	METAL CHIP	33	5%	1/10W
R205	1-216-049-00	METAL CHIP	1K	5%	1/10W
R211	1-216-121-00	METAL CHIP	1M	5%	1/10W
R212	1-216-079-00	METAL CHIP	18K	5%	1/10W
R213	1-216-089-00	METAL GLAZE	47K	5%	1/10W
R214	1-216-073-00	METAL CHIP	10K	5%	1/10W
R215	1-216-061-00	METAL CHIP	3.3K	5%	1/10W
R216	1-216-077-00	METAL CHIP	15K	5%	1/10W
R217-219					
	1-216-121-00	METAL CHIP	1M	5%	1/10W
R220	1-216-049-00	METAL CHIP	1K	5%	1/10W
R221	1-216-049-00	METAL CHIP	1K	5%	1/10W
R222	1-216-085-00	METAL CHIP	33K	5%	1/10W
R223	1-216-077-00	METAL CHIP	15K	5%	1/10W
R224	1-216-085-00	METAL CHIP	33K	5%	1/10W
R225	1-216-077-00	METAL CHIP	15K	5%	1/10W
R301	1-216-005-00	METAL CHIP	15	5%	1/10W
R302	1-216-005-00	METAL CHIP	15	5%	1/10W
R311	1-216-097-00	METAL CHIP	100K	5%	1/10W
R313-316					
	1-216-057-00	METAL GLAZE	2.2K	5%	1/10W
R317	1-216-049-00	METAL CHIP	1K	5%	1/10W
R318	1-216-049-00	METAL CHIP	1K	5%	1/10W
R321	1-216-005-00	METAL CHIP	15	5%	1/10W
R322	1-216-005-00	METAL CHIP	15	5%	1/10W

Ref. No.	Part No.	Description			Remark
R331-335					
	1-216-075-00	METAL CHIP	12K	5%	1/10W
R336	1-216-224-00	METAL GLAZE	12K	5%	1/8W
R351	1-216-097-00	METAL CHIP	100K	5%	1/10W
R352	1-216-097-00	METAL CHIP	100K	5%	1/10W
R401	1-249-395-11	CARBON	15	5%	1/4W
R402	1-216-061-00	METAL CHIP	3.3K	5%	1/10W
R403	1-216-089-00	METAL GLAZE	47K	5%	1/10W
R404	1-216-083-00	METAL CHIP	27K	5%	1/10W
R405	1-216-089-00	METAL GLAZE	47K	5%	1/10W
R406	1-216-097-00	METAL CHIP	100K	5%	1/10W
R412	1-216-089-00	METAL GLAZE	47K	5%	1/10W
R413	1-216-049-00	METAL CHIP	1K	5%	1/10W
R414	1-216-057-00	METAL GLAZE	2.2K	5%	1/10W
R415	1-216-041-00	METAL CHIP	470	5%	1/10W
R416	1-216-049-00	METAL CHIP	1K	5%	1/10W
R417	1-216-057-00	METAL GLAZE	2.2K	5%	1/10W
R418	1-216-041-00	METAL CHIP	470	5%	1/10W
R419	1-216-081-00	METAL CHIP	22K	5%	1/10W
R420	1-216-057-00	METAL GLAZE	2.2K	5%	1/10W
R421	1-216-069-00	METAL CHIP	6.8K	5%	1/10W
R422	1-216-041-00	METAL CHIP	470	5%	1/10W
R423	1-216-089-00	METAL GLAZE	47K	5%	1/10W
R424	1-216-049-00	METAL CHIP	1K	5%	1/10W
R425	1-216-057-00	METAL GLAZE	2.2K	5%	1/10W
R443	1-216-065-00	METAL CHIP	4.7K	5%	1/10W
R444	1-216-057-00	METAL GLAZE	2.2K	5%	1/10W
R445-447					
	1-216-097-00	METAL CHIP	100K	5%	1/10W
R448	1-249-389-11	CARBON	4.7	5%	1/4W
R449	1-249-389-11	CARBON	4.7	5%	1/4W
R450	1-216-049-00	METAL CHIP	1K	5%	1/10W
R701	1-216-089-00	METAL GLAZE	47K	5%	1/10W
R702	1-216-089-00	METAL GLAZE	47K	5%	1/10W
R703-706					
	1-216-049-00	METAL CHIP	1K	5%	1/10W
R707	1-216-089-00	METAL GLAZE	47K	5%	1/10W
R708	1-216-097-00	METAL CHIP	100K	5%	1/10W
R711	1-216-109-00	METAL GLAZE	330K	5%	1/10W
R712	1-216-089-00	METAL GLAZE (XR-7041)	47K	5%	1/10W
R712	1-216-097-00	METAL CHIP (XR-7042)	100K	5%	1/10W
R712	1-216-101-00	METAL CHIP (XR-7040:AEP)	150K	5%	1/10W
R713	1-216-089-00	METAL GLAZE (XR-7040:AEP)	47K	5%	1/10W
R713	1-216-097-00	METAL CHIP (XR-7040:E, XR-7042, XR-U110)	100K	5%	1/10W

www.manualscenter.com

Ref. No.	Part No.	Description				Remark
R713	1-216-101-00	METAL CHIP (XR-7041)	150K	5%	1/10W	
R714	1-216-097-00	METAL CHIP	100K	5%	1/10W	
R715	1-216-025-00	METAL CHIP	100	5%	1/10W	
R716	1-216-025-00	METAL CHIP	100	5%	1/10W	
R717	1-216-675-11	METAL CHIP	10K	0.5%	1/10W	
R718	1-216-675-11	METAL CHIP	10K	0.5%	1/10W	
R719	1-216-081-00	METAL CHIP	22K	5%	1/10W	
R720	1-216-097-00	METAL CHIP	100K	5%	1/10W	
R721	1-216-089-00	METAL GLAZE	47K	5%	1/10W	
R722	1-216-089-00	METAL GLAZE	47K	5%	1/10W	
R724-728						
	1-216-049-00	METAL CHIP	1K	5%	1/10W	
R731	1-216-097-00	METAL CHIP (XR-7040:E)	100K	5%	1/10W	
R732	1-216-097-00	METAL CHIP (EXCEPT XR-7040:E)	100K	5%	1/10W	
R733	1-216-105-00	METAL CHIP (XR-7040:E)	220K	5%	1/10W	
R734	1-216-105-00	METAL CHIP	220K	5%	1/10W	
R735	1-216-295-00	METAL CHIP (XR-7040:E)	0	5%	1/10W	
R740	1-216-097-00	METAL CHIP	100K	5%	1/10W	
R751	1-216-097-00	METAL CHIP	100K	5%	1/10W	
R771	1-216-057-00	METAL GLAZE	2.2K	5%	1/10W	
R781	1-216-005-00	METAL CHIP	15	5%	1/10W	
R782	1-216-025-00	METAL CHIP	100	5%	1/10W	
R783	1-216-025-00	METAL CHIP	100	5%	1/10W	
		< VARIABLE RESISTOR >				
RV1	1-238-600-11	RES, ADJ, CARBON 10K				
RV2	1-238-600-11	RES, ADJ, CARBON 10K (EXCEPT XR-U110)				
RV2	1-238-601-11	RES, ADJ, CARBON 22K (XR-U110)				
RV61	1-238-595-11	RES, ADJ, CARBON 220 (XR-7042)				
		< SWITCH >				
S701	1-571-478-11	SWITCH, SLIDE (POWER SELECT) (EXCEPT XR-7040:E)				
S701	1-571-478-11	SWITCH, SLIDE (9K/10K) (XR-7040:E)				
		< TRANSFORMER >				
T1	1-404-955-11	TRANSFORMER, IF				
		< TUNER >				
TU1	1-693-000-21	TUNER UNIT (FM/AM) (EXCEPT XR-7041)				
TU1	1-693-001-11	TUNER UNIT (FM/MW/LW) (XR-7041)				

Ref. No.	Part No.	Description	Remark
		< VIBRATOR >	
X1	1-579-278-11	VIBLATOR, CERAMIC (456kHz)	
X81	1-567-848-11	VIBRATOR, CRYSTAL (7.2MHz)	
X701	1-579-886-21	VIBRATOR, CRYSTAL (32.768kHz)	
X702	1-567-776-21	VIBRATOR, CERAMIC (6MHz)	

****

*	1-646-958-11	RESET BOARD	
		**********	
*	3-389-489-01	SPACER (CONNECTOR)	
		< CONNECTOR >	
* CNJ7	1-691-558-11	SOCKET, CONNECTOR 12P	
CNP3	1-573-121-11	PIN, CONNECTOR 12P	
		< SWITCH >	
S871	1-570-909-11	SWITCH, TACTIL (REFLOW TYPE) (RESET)	
S872	1-692-366-11	SWITCH, PUSH (1 KEY) (NOSE DET)	

****

SEMICONDUCTOR LEAD LAYOUTS

BA328F
RC4558DR-A

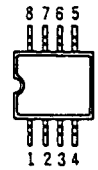

(TOP VIEW)

BU4052BF

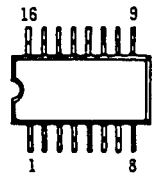

(TOP VIEW)

LC7216M
TDA1579T

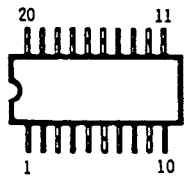

(TOP VIEW)

LC7537AN

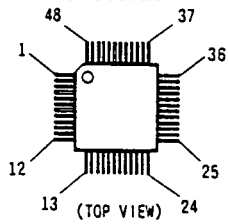

(TOP VIEW)

LC7582

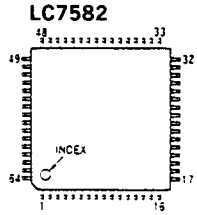

(TOP VIEW)

MM1175XFF

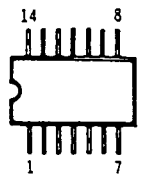

(TOP VIEW)

RH5VA40AA

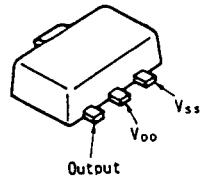

TA2027F

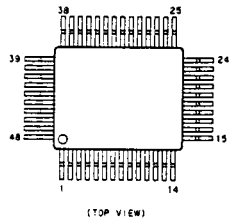

TA8215H

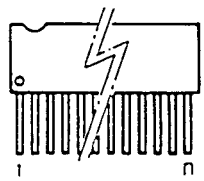

μPD75518GF-096-3B9

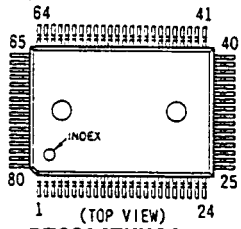

DTC314TKH04
RN1402
RN1411
RN2402
2SA1162-G
2SC2412KLN-T146-E
2SC2712-YG

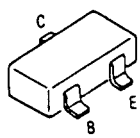

2SA1150-Y

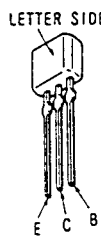

2SB1115A-YQ
2SD1664-QR

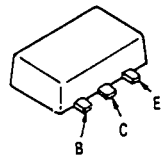

2SB1202FAST

2SD1802FA-S

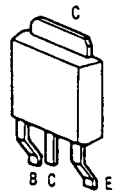

DSA3A4

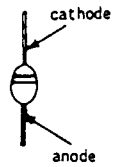

DTZ5.1B
MA110

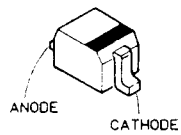

MA8036

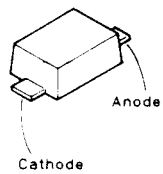

RD4.3ES-B2

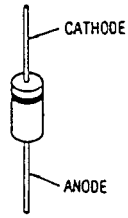

RD5.1ES-B2
RD5.6ES-B2
RD6.2ES-B2
RD7.5ES-B2
RD9.1ES-B2
RD10ES-B1
1SS119
11ES2

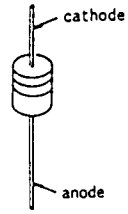

RD5.1M-B2
RD6.2M-B2

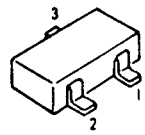

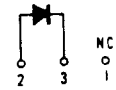

AY1101W-88

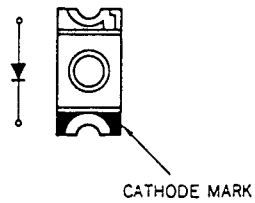

www.manualscenter.com

• Semiconductor Location

Ref. No.	Location	Ref. No.	Location
D1	K-21	D892	E-14
D2	K-21	D893	F-20
D3	I-17	D894	E-20
D5	J-16	D901	D-22
D6	I-16		
D7	J-17	IC1	I-12
D8	J-19	(IC61)	I-10
D61	I-21	IC81	G-14
D301	F-18	IC111	F-11
D311	G-21	IC112	F-10
D312	C-21	IC113	E-9
D401	D-22	IC211	D-11
D402	E-23	IC212	D-10
D403	E-23	IC213	D-9
D404	H-23	IC301	G-13
D406	D-22	IC302	E-12
D407	E-22	IC311	E-10
D408	J-22	IC401	C-8
D441	H-19	IC631	F-4
D681	I-6	IC632	B-4
D682	A-5	IC701	B-12
D701	C-17	IC781	B-9
D702	C-17	IC801	I-35
D703	D-17		
D704	D-17	Q1	K-20
D705	D-17	Q51	I-9
D706	D-17	Q52	I-8
D707	C-16	Q401	D-22
D708	C-16	Q402	D-7
D771	G-19	Q405	D-23
D772	G-19	Q406	D-8
D781	B-22	Q407	E-23
D782	B-22	Q408	I-7
D783	B-23	Q409	I-23
D801	A-32	Q410	F-7
D802	A-33	Q411	E-17
D804	C-33	Q412	D-14
D805	B-32	Q413	D-14
D806	B-33	Q414	I-8
D807	C-32	Q415	H-8
D808	D-33	Q416	H-9
D809	D-32	Q441	G-10
D810	E-32	Q442	G-20
D811	F-33	Q601	K-3
D812	E-33	Q611	K-2
D813	F-32	Q651	K-2
D814	G-32	Q661	K-2
D815	G-33	Q701	C-17
D816	I-33	Q702	C-17
D817	I-33	Q703	C-17
D819	H-33	Q704	C-13
D820	A-31	Q771	G-19
D821	A-32	Q772	G-18
D831	G-34		
D891	G-35	THP682	J-5

( ): XR-7042 only

Note:
- ○—— : parts extracted from the component side.
- ● : Through hole.

PRINTED WIRING BOARDS • Refer to page 11 for Semiconductor Lead Layouts.

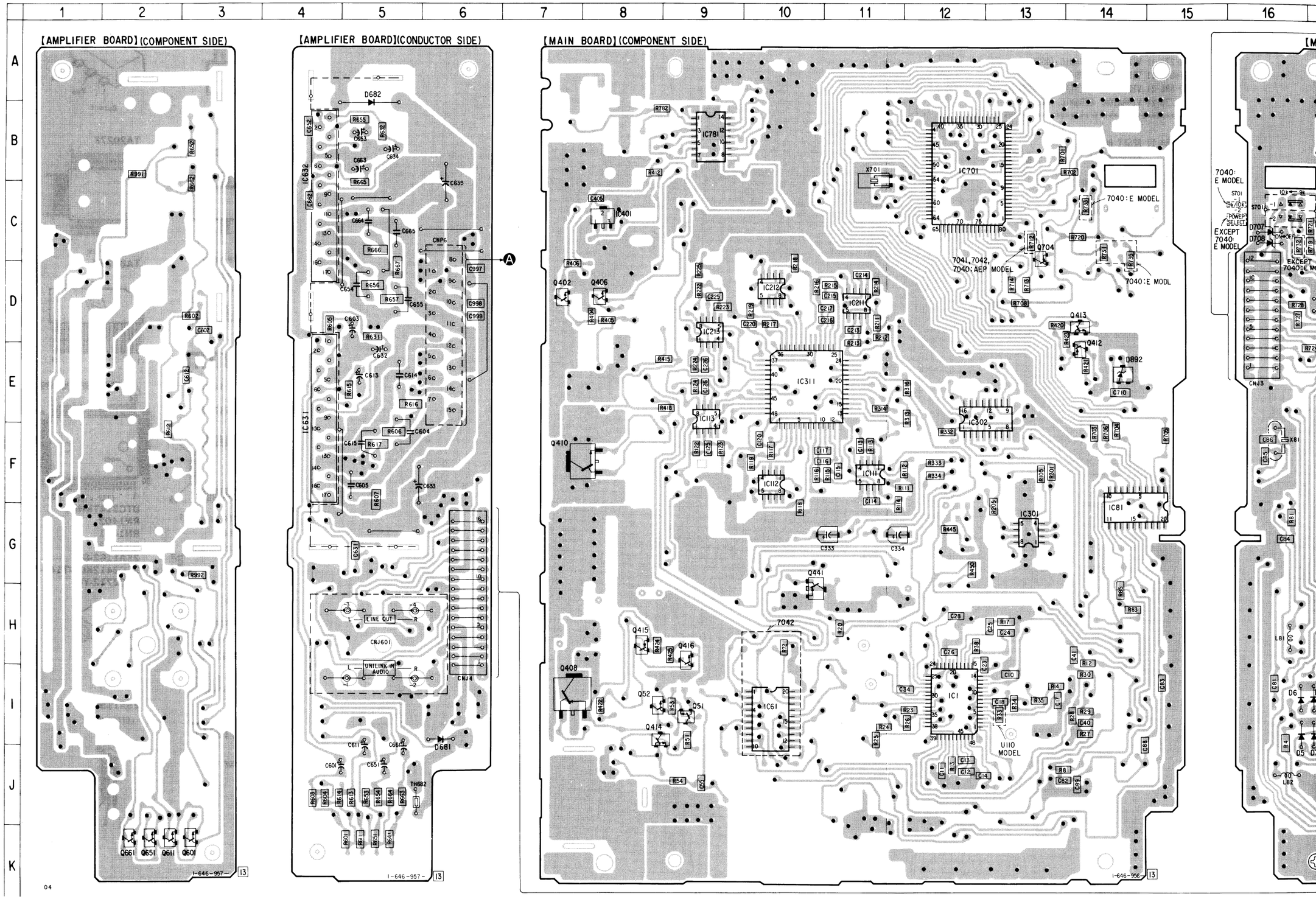

www.manualscenter.com

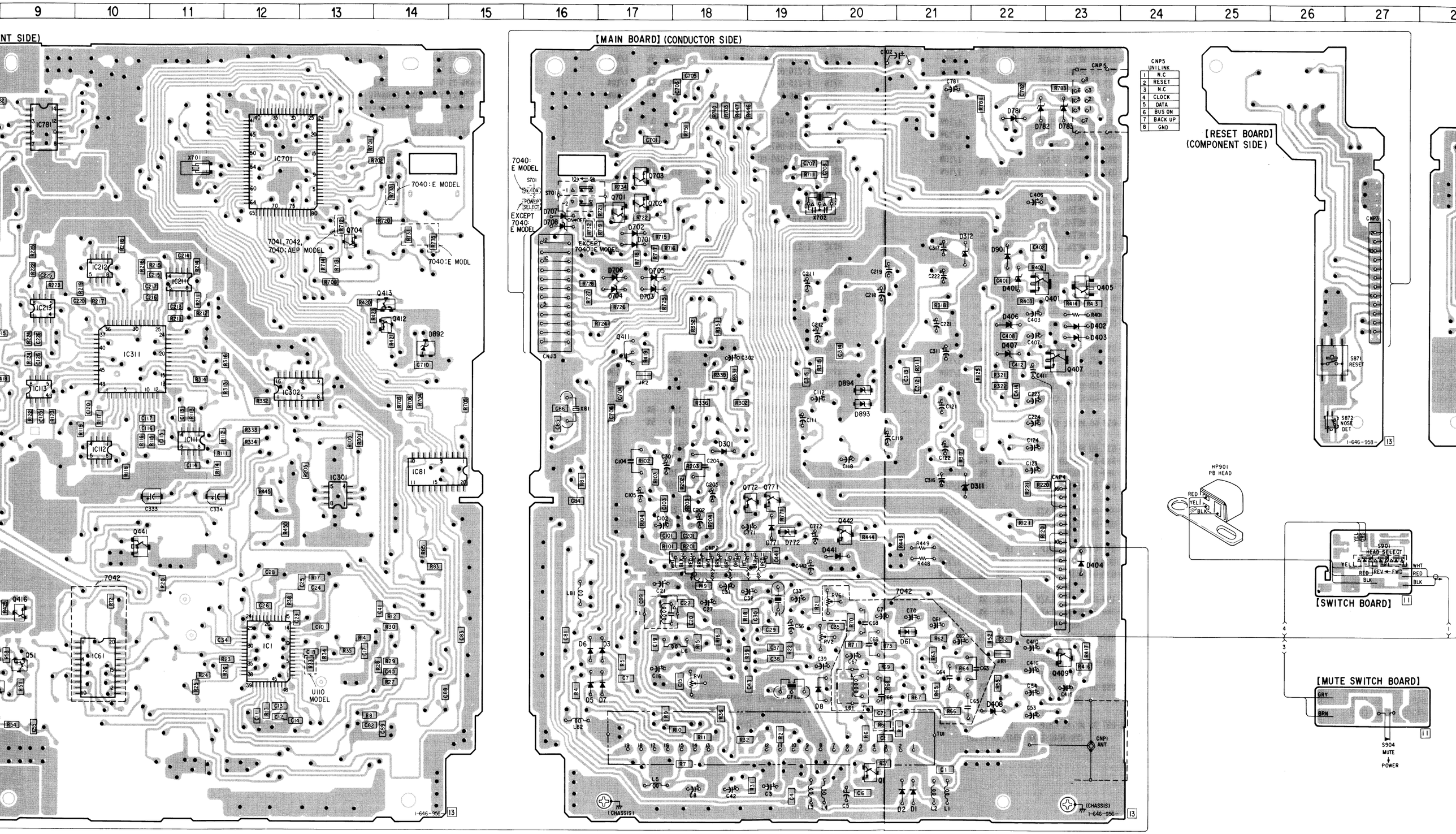

www.manualscenter.com

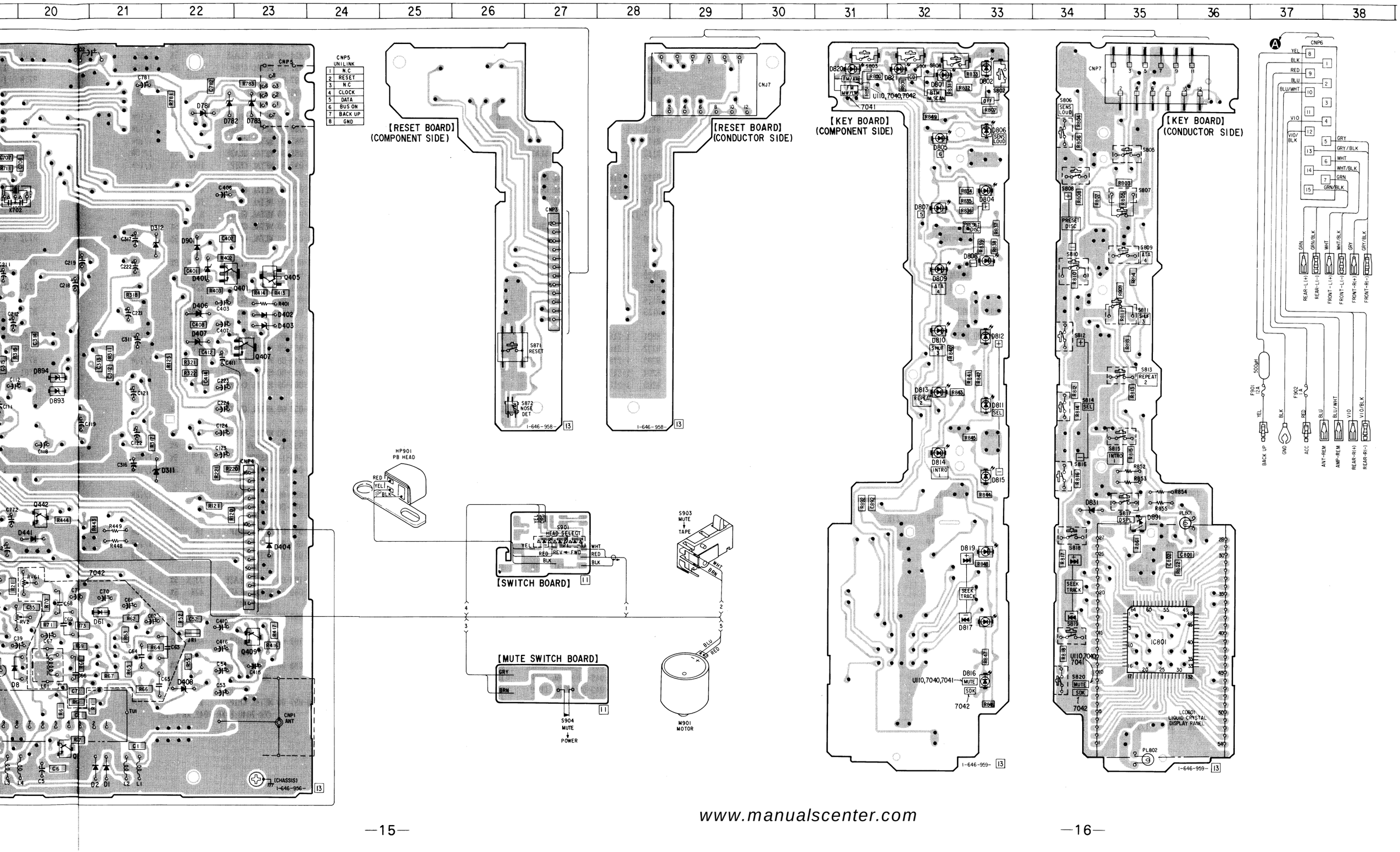

www.manualscenter.com

SCHEMATIC DIAGRAM

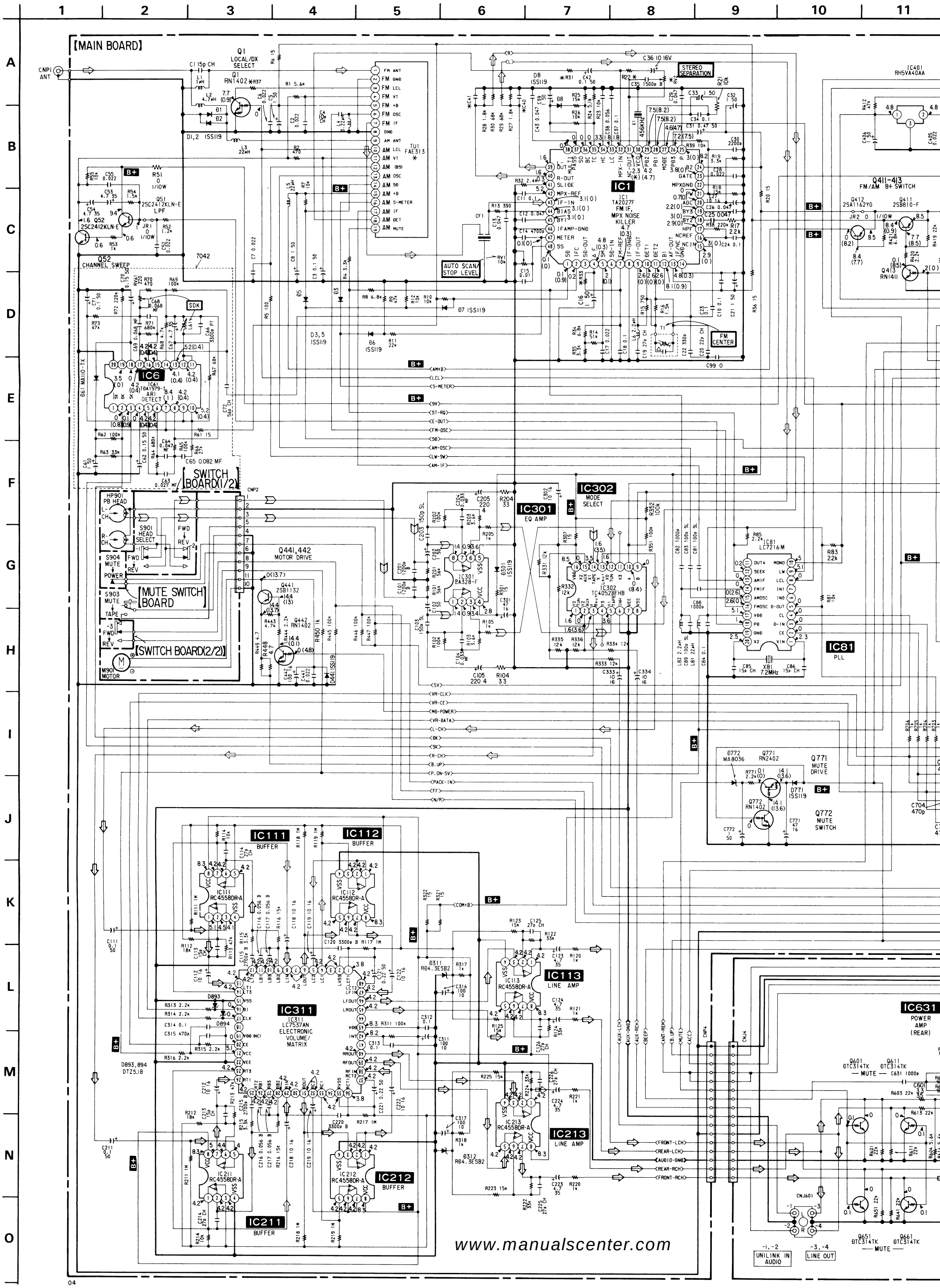

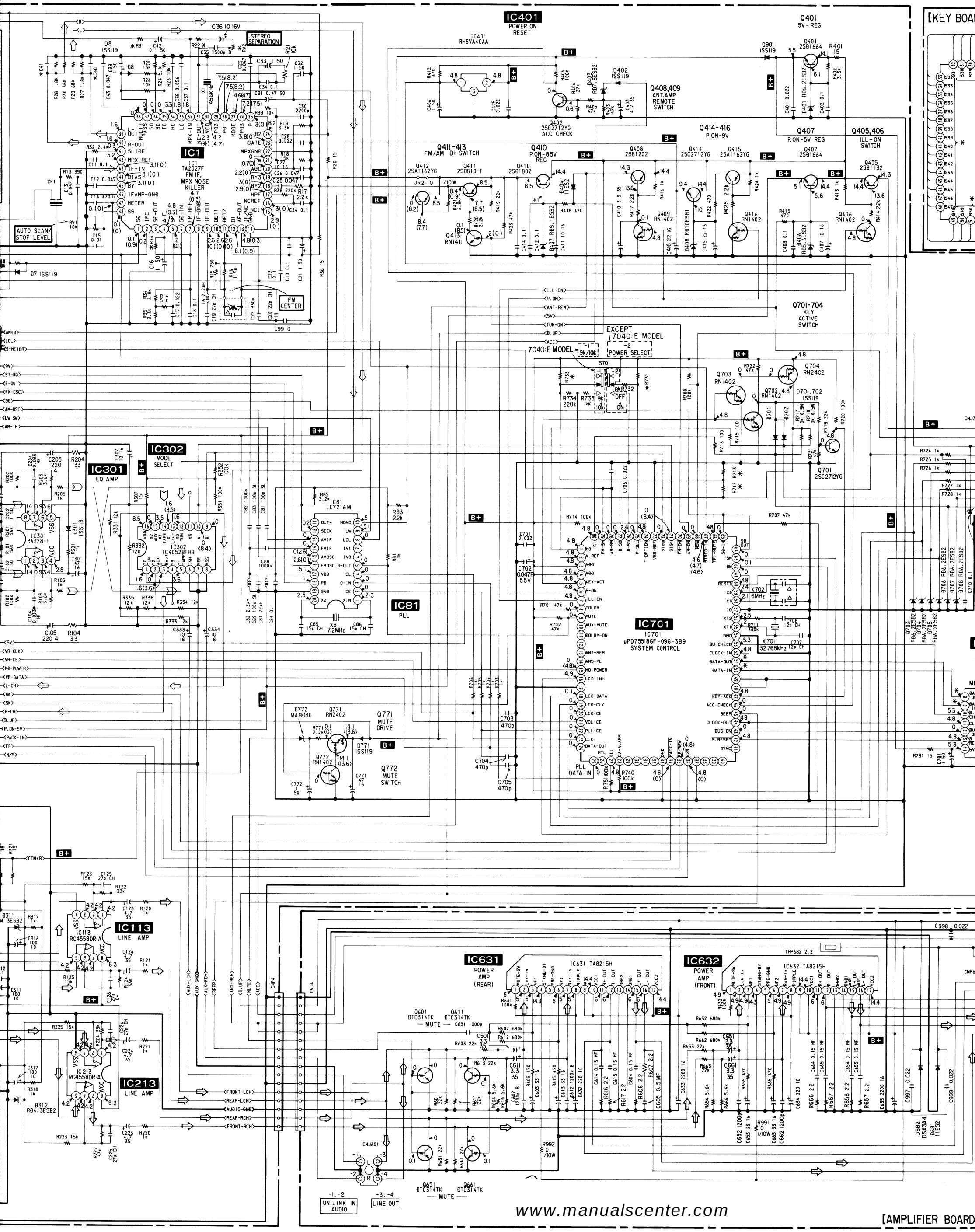

www.manualscenter.com

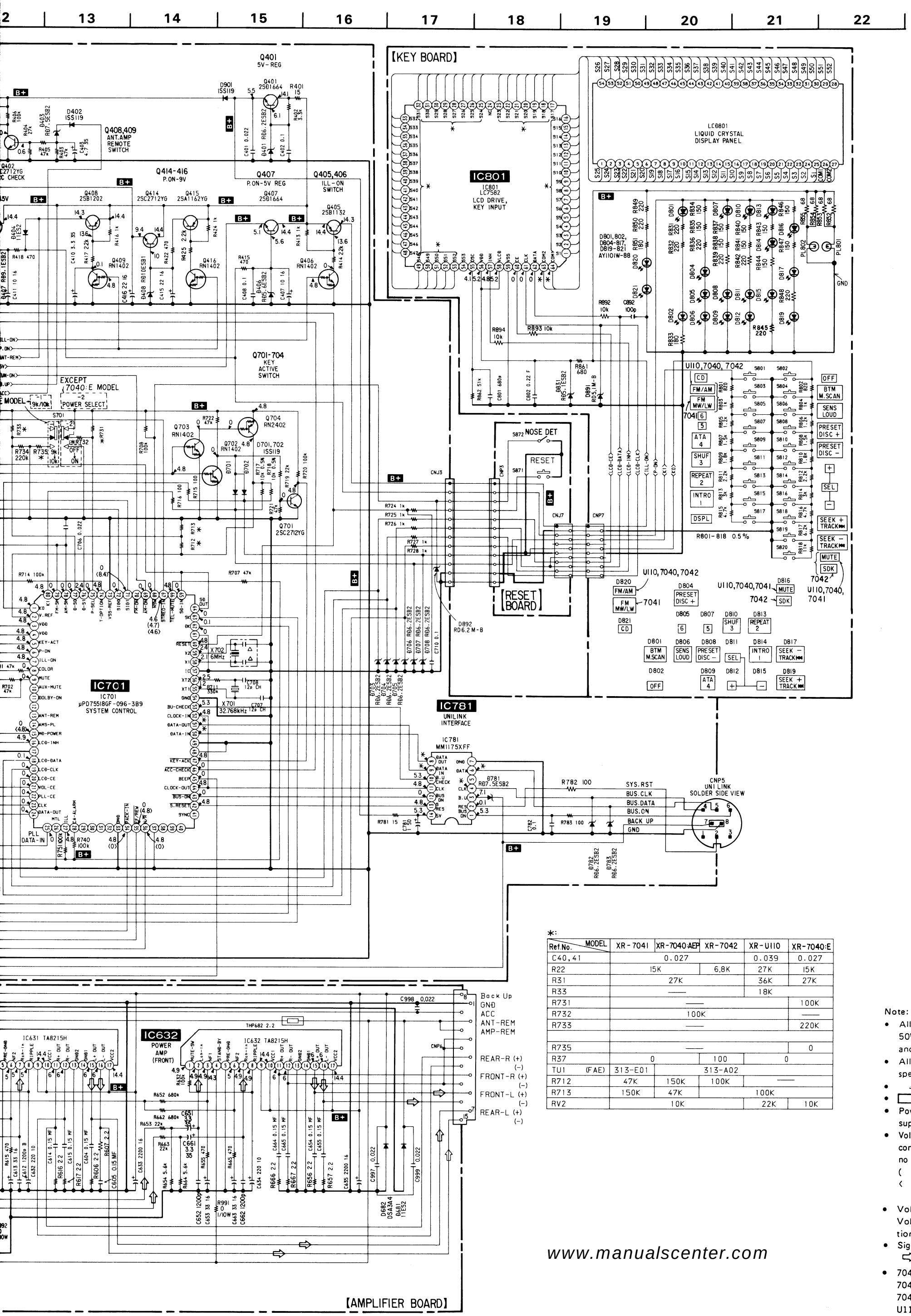

Ref.No. \ MODEL	XR-7041	XR-7040:AEP	XR-7042	XR-U110	XR-7040:E
C40, 41	0.027			0.039	0.027
R22	15K		6.8K	27K	15K
R31	27K			36K	27K
R33	—			18K	
R731	—				100K
R732	100K				—
R733	—				220K
R735	—				0
R37	0		100	0	
TU1 (FAE)	313-E01	313-A02			
R712	47K	150K	100K	—	
R713	150K	47K	100K		
RV2	10K			22K	10K

www.manualscenter.com

• Liquid Crystal

SEGMENT

COMMON

Note:

- All capacitors are in μF u
  50WV or less are not inc
  and tantalums.
- All resistors are in Ω and
  specified.
- △ : internal componen
- ▭ : adjustment for rep
- Power voltage is dc 14.4V
  supply from Back Up and A
- Voltage is dc with respect to
  conditions.
  no mark : FM
  ( ) : AM
  〈 〉 : PLAY
  ✱ : Impossible measu
- Voltages are taken with a V
  Voltage variations may be
  tion tolerances.
- Signal path.
  ⇨ : FM
- 7040 : XR-7040
  7041 : XR-7041
  7042 : XR-7042
  U110 : XR-U110

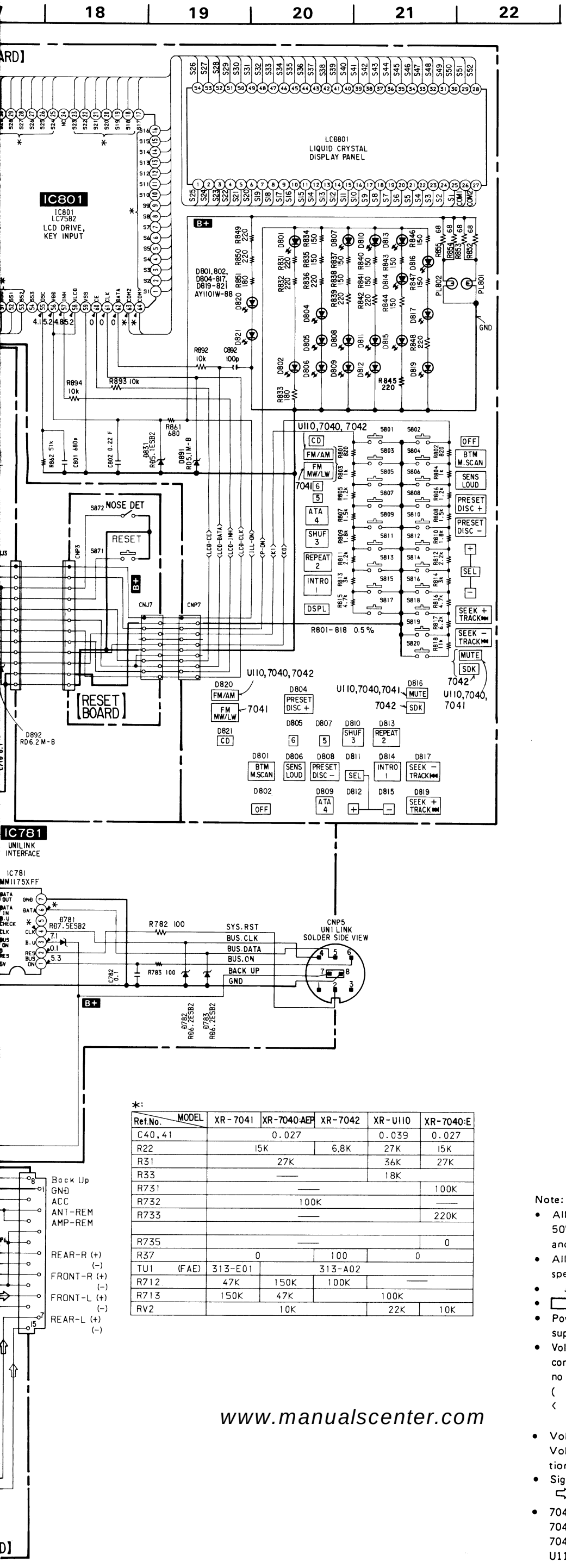

Ref.No. \ MODEL	XR-7041	XR-7040:AEP	XR-7042	XR-U110	XR-7040:E
C40,41	0.027			0.039	0.027
R22	15K		6.8K	27K	15K
R31	27K			36K	27K
R33	—			18K	
R731	—				100K
R732	100K				—
R733	—				220K
R735	—				0
R37	0		100	0	
TU1 (FAE)	313-E01	313-A02			
R712	47K	150K	100K	—	
R713	150K	47K	100K		
RV2	10K			22K	10K

www.manualscenter.com

• **Liquid Crystal Display Panel (LCD801)**

SEGMENT

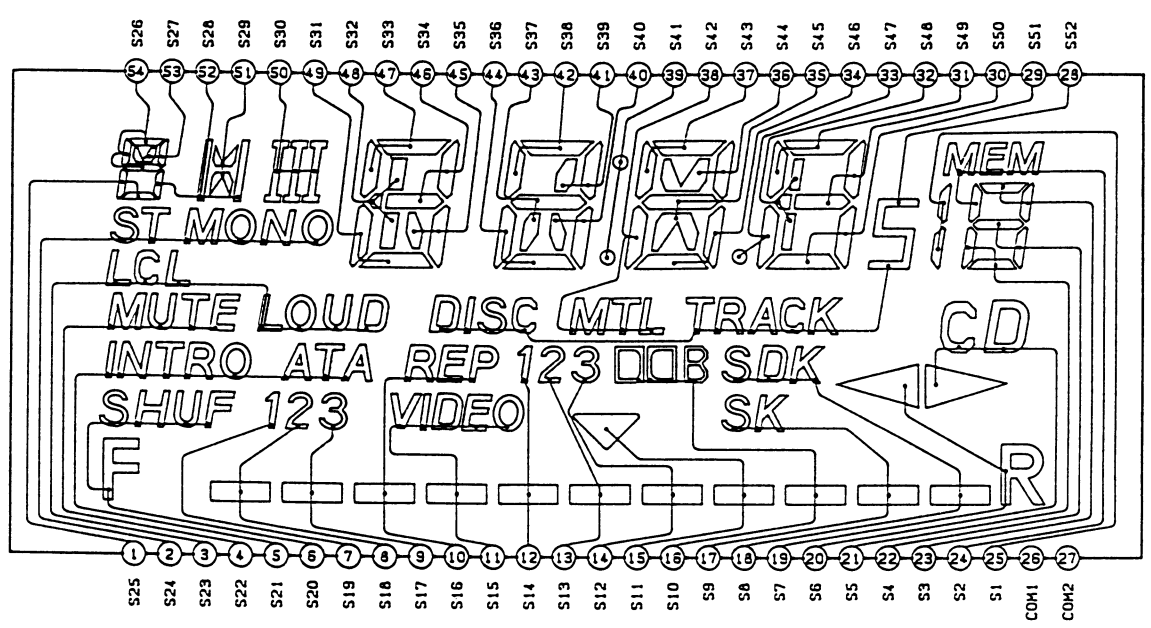

COMMON

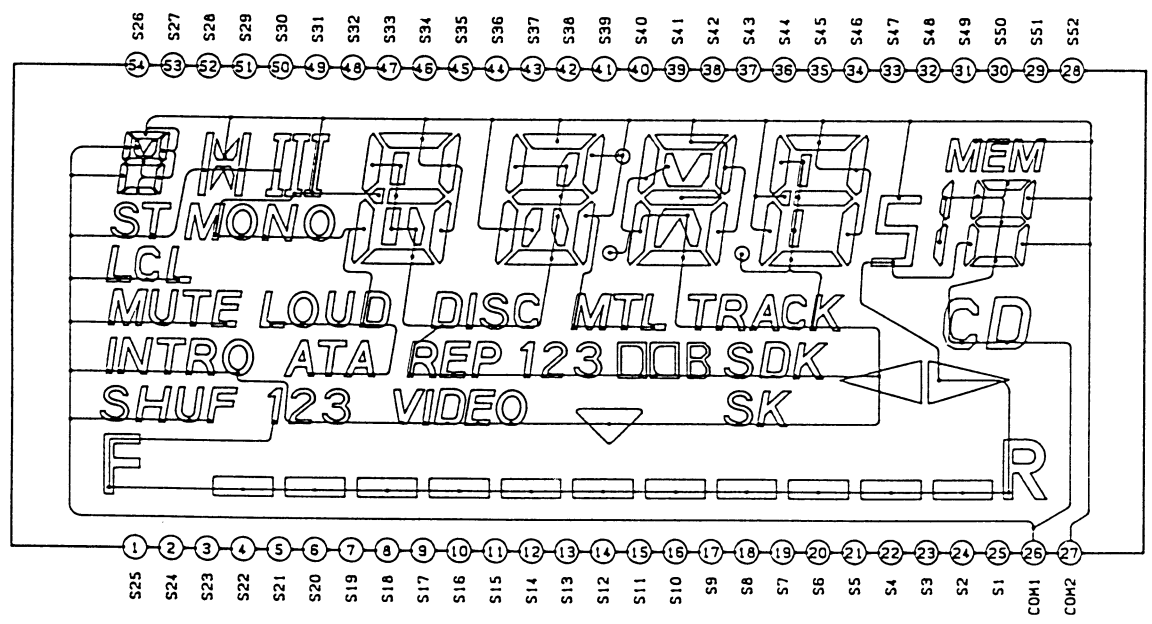

Note:

- All capacitors are in μF unless otherwise noted. pF: μμF 50WV or less are not indicated except for electrolytics and tantalums.
- All resistors are in Ω and ¼W or less unless otherwise specified.
- △ : internal component.
- ▭ : adjustment for repair.
- Power voltage is dc 14.4V and fed with regulated dc power supply from Back Up and ACC terminal.
- Voltage is dc with respect to ground under no-signal (detuned) conditions.
  no mark : FM
  ( ) : AM
  〈 〉 : PLAY
  ✳ : Impossible measurement point
- Voltages are taken with a VOM (Input Impedance 10MΩ). Voltage variations may be noted due to normal production tolerances.
- Signal path.
  ⇨ : FM
- 7040 : XR-7040
  7041 : XR-7041
  7042 : XR-7042
  U110 : XR-U110

CORRECTION

: indicates corrected portion.

Page 1

Tuner section

FM

Tuning range

XR-U110:
87.5—107.9MHz
XR-7040: AEP model/7041/7042:
87.5—108.0MHz
XR-7040: E model:
FM tuning interval:
50kHz/200kHz switchable
87.5—108.0MHz
(at 50kHz step)
87.5—107.9MHz
(at 200kHz step)

Page 2

AM (MW/LW)

Tuning range

XR-U110:
530—1,710kHz
XR-7040: AEP model/7042:
531—1,602kHz
XR-7040: E model:
AM tuning interval:
9kHz/10kHz switchable
531—1,710kHz
(at 9kHz step)
530—1,620kHz
(at 10kHz step)
XR-7041:
MW: 531—1,602kHz
LW: 153—281kHz

Page 10

XR-7040: E model only

Frequency Select Switch

The AM(FM) tuning interval is factory set to the 9K (50K) position. If the frequency allocation system of your country is based on 10 kHz (200 kHz) interval, set the switch on the bottom of the unit to the 10K (200K) position before making connections.

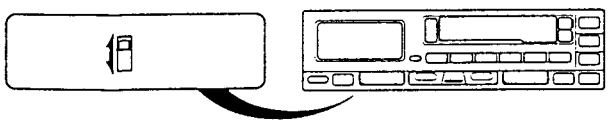

Page 40

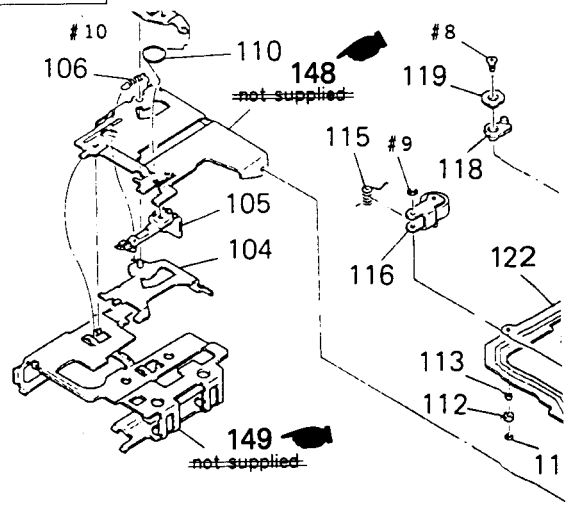

Ref. No.	Part No.	Description	Remark
148	3-375-383-01	HANGER (X), CASSETTE	
149	3-375-384-01	HOLDER (X), CASSETTE	

Page 41

Ref. No.	Part No.	Description	Remark
S903	1-554-790-21	SWITCH, POWER (MUTE/TAPE)	
S904	1-692-065-11	SWITCH, LEAF (MUTE/POWER)	

Page 49

Ref. No.	Part No.	Description	Remark
		MISCELLANEOUS	
		**********	
S903	1-554-790-21	SWITCH, POWER (MUTE/TAPE)	
S904	1-692-065-11	SWITCH, LEAF (MUTE/POWER)	

Page 50

Ref. No.	Part No.	Description	Remark
		ACCESSORIES & PACKING MATERIALS	
		**********	
*	3-378-800-01	CUSHION (UPPER)	
*	3-378-801-01	CUSHION (LOWER)	
*	3-387-920-01	INDIVIDUAL CARTON (U110)	
*	3-388-368-01	INDIVIDUAL CARTON (7040)	
*	3-387-922-01	INDIVIDUAL CARTON (7041)	
*	3-387-924-01	INDIVIDUAL CARTON (7042)	

9-957-564-81

Sony Corporation
Mobile Electronics Group

English
9310477-1
Printed in Japan
© 1993. 9

Published by Audio Sector Quality Assurance Dept.

XR-7040/7041/7042/U110

SONY®
SERVICE MANUAL

US Model
Canadian Model
XR-U110
AEP Model
XR-7040/7041
E Model
XR-7040
German Model
XR-7042

SUPPLEMENT-2

File this supplement with the service manual.

Subject : Change notice for the circuit diagram and PC boards

www.manualscenter.com

1. CHANGE OF SWITCH S872

The switch S872 (NOSE DET) mounted on RESET board was deleted on the way of production. It has been changed that this switch is mounted to the Lock Assy.

Page 38

: Additional Parts

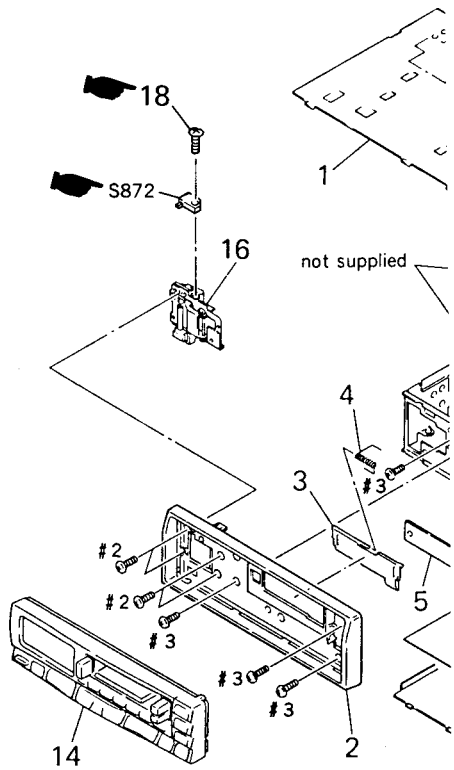

Ref. No.	Part No.	Description	Remark
18	7-627-853-57	PRECISION SCREW +P 2×5 TYPE3	
S872	1-570-771-11	SWITCH (NOSE DET)	

2. CHANGE OF SCHEMATIC DIAGRAM

Page 18 **(Supplement-1)**

: Changed Portion

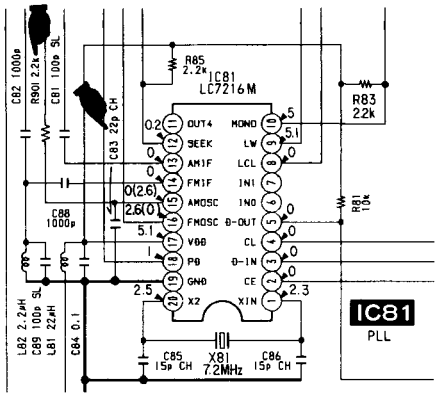

Page 19 **(Supplement-1)**

: Changed Portion

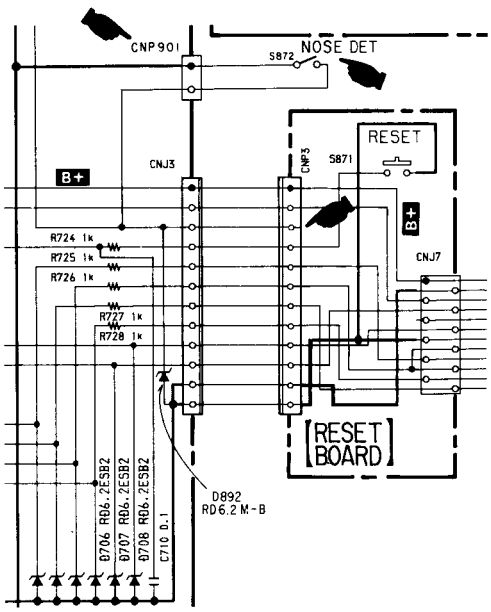

www.manualscenter.com

3. CHANGE OF PRINTED WRING BOARDS

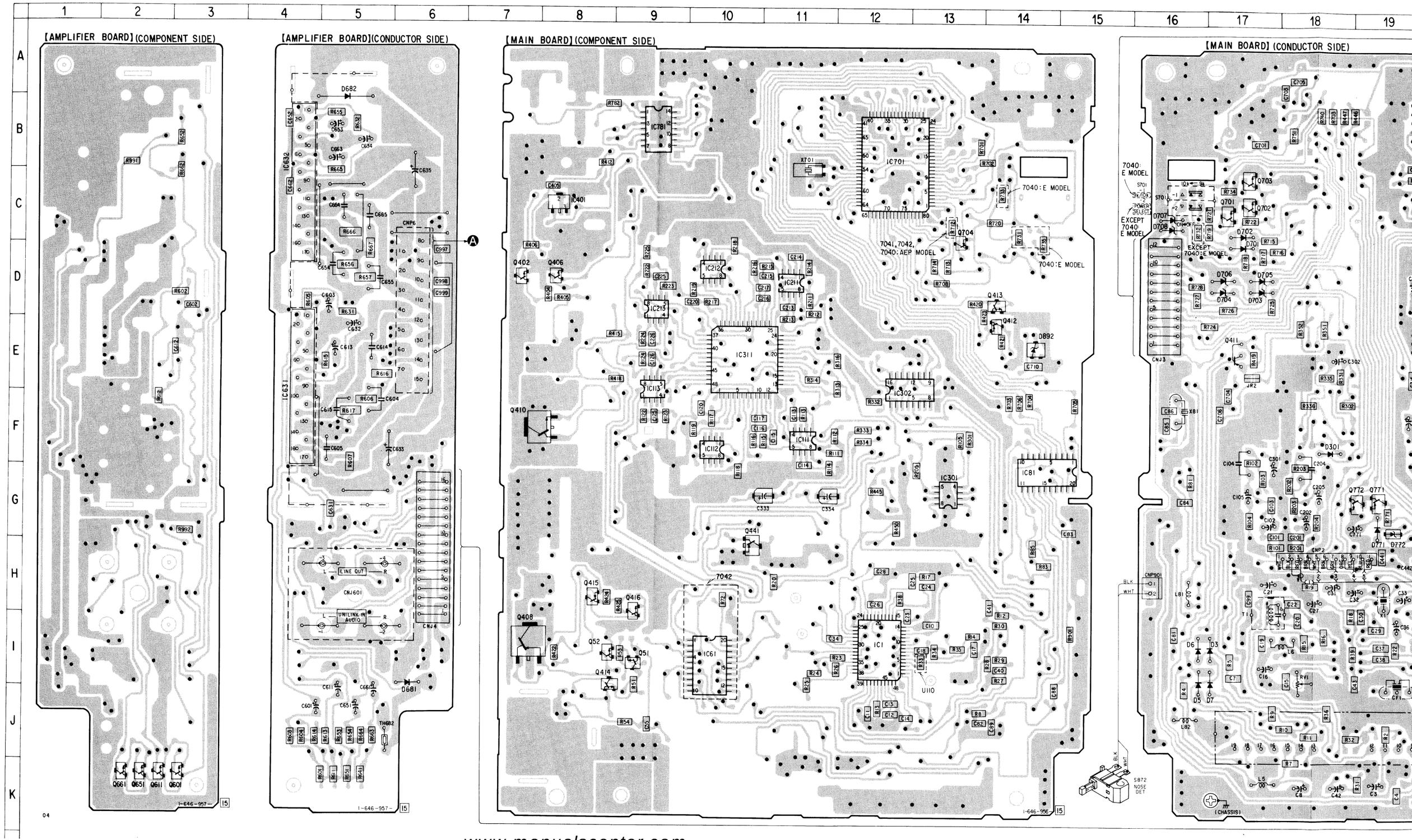

www.manualscenter.com

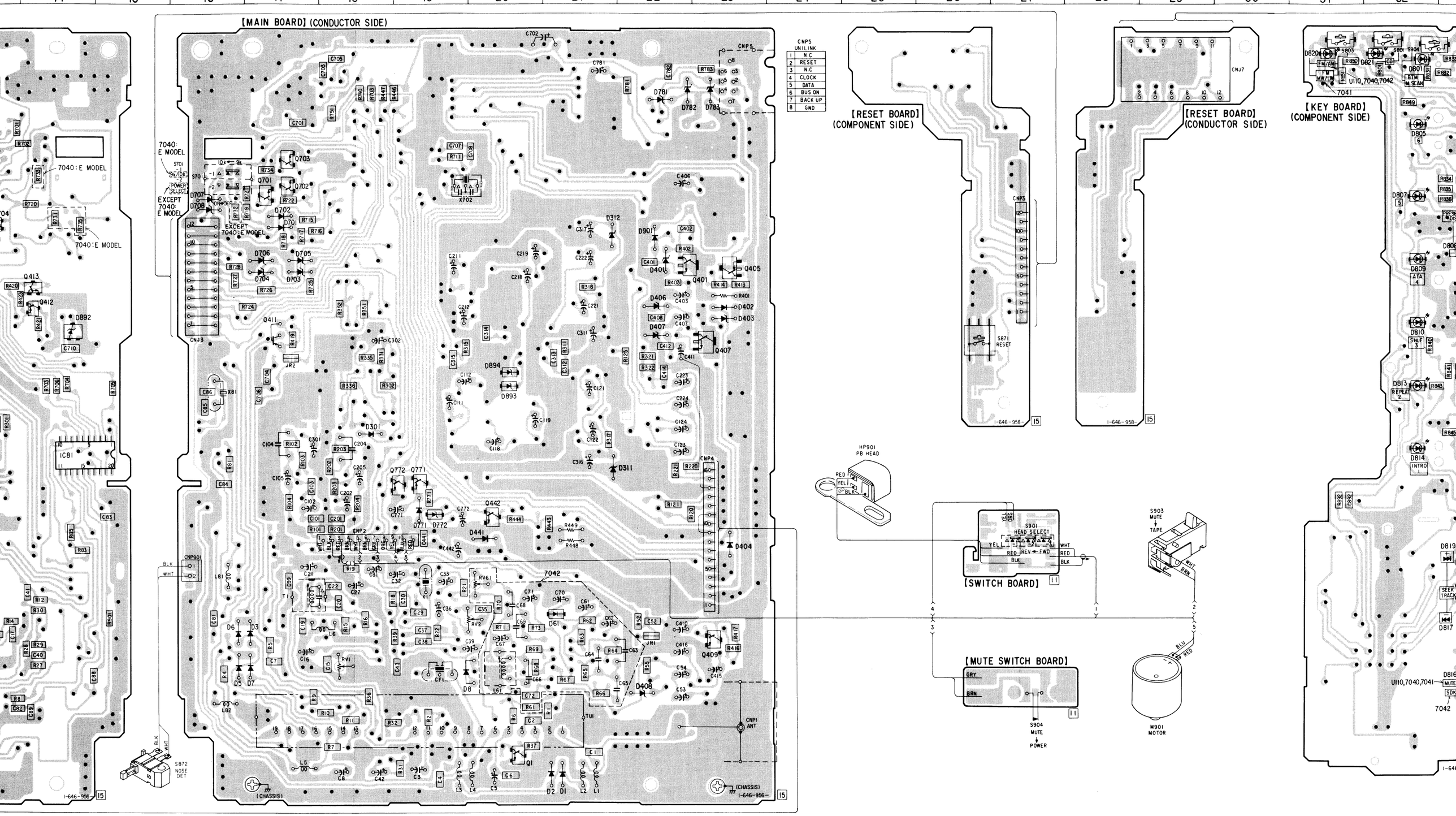

www.manualscenter.com

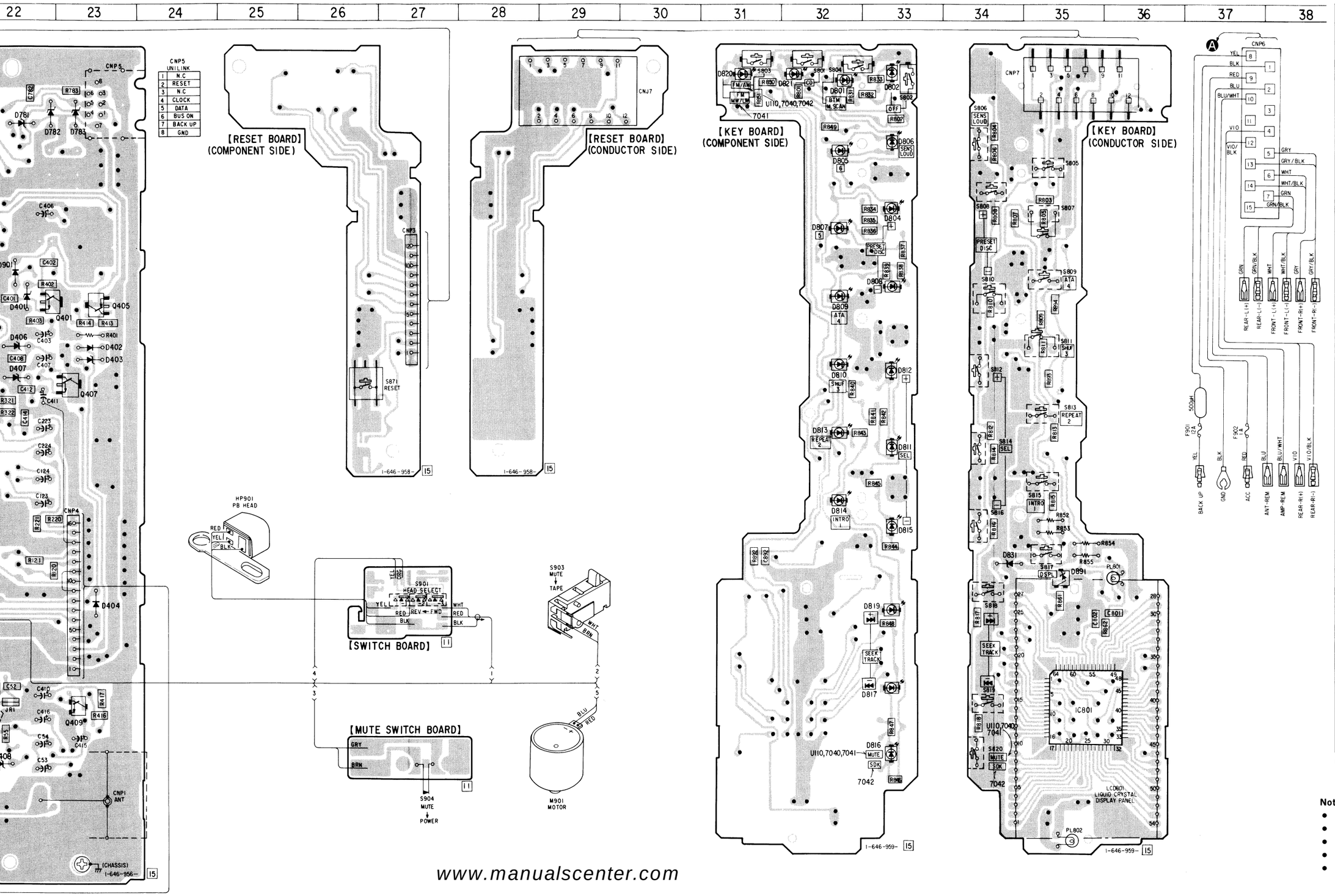

www.manualscenter.com

• Semiconductor Location

Ref. No.	Location	Ref. No.	Location
D1	K-21	D892	E-14
D2	K-21	D893	F-20
D3	I-17	D894	E-20
D5	J-16	D901	D-22
D6	I-16		
D7	J-17	IC1	I-12
D8	J-19	(IC61)	I-10
D61	I-21	IC81	G-14
D301	F-18	IC111	F-11
D311	G-21	IC112	F-10
D312	C-21	IC113	E-9
D401	D-22	IC211	D-11
D402	E-23	IC212	D-10
D403	E-23	IC213	D-9
D404	H-23	IC301	G-13
D406	D-22	IC302	E-12
D407	E-22	IC311	E-10
D408	J-22	IC401	C-8
D441	H-19	IC631	F-4
D681	I-6	IC632	B-4
D682	A-5	IC701	B-12
D701	C-17	IC781	B-9
D702	C-17	IC801	I-35
D703	D-17		
D704	D-17	Q1	K-20
D705	D-17	Q51	I-9
D706	D-17	Q52	I-8
D707	C-16	Q401	D-22
D708	C-16	Q402	D-7
D771	G-19	Q405	D-23
D772	G-19	Q406	D-8
D781	B-22	Q407	E-23
D782	B-22	Q408	I-7
D783	B-23	Q409	I-23
D801	A-32	Q410	F-7
D802	A-33	Q411	E-17
D804	C-33	Q412	D-14
D805	B-32	Q413	D-14
D806	B-33	Q414	I-8
D807	C-32	Q415	H-8
D808	D-33	Q416	H-9
D809	D-32	Q441	G-10
D810	E-32	Q442	G-20
D811	F-33	Q601	K-3
D812	E-33	Q611	K-2
D813	F-32	Q651	K-2
D814	G-32	Q661	K-2
D815	G-33	Q701	C-17
D816	I-33	Q702	C-17
D817	I-33	Q703	C-17
D819	H-33	Q704	C-13
D820	A-31	Q771	G-19
D821	A-32	Q772	G-18
D831	G-34		
D891	G-35	THP682	J-5

( ): XR-7042 only

Note :

- ○— : parts extracted from the component side.
- — : parts extracted from the conductor side.
- ● : Through hole.
- indicates side identified with part number.
- ▒ : Pattern on the side which is seen.

(The other layer's patterns are not indicated.)