Service Manual

ORDER NO.
ARP3094

HDTV PROJECTION MONITOR

SD-533HD5
SD-643HD5

THIS MANUAL IS APPLICABLE TO THE FOLLOWING MODEL(S) AND TYPE(S).

Type	Model		Power Requirement	Remarks
	SD-533HD5	SD-643HD5		
KUXC/CA	○	○	AC120V	
KBXC	○	—	AC120V	

CONTENTS

PIONEER ELECTRONIC CORPORATION 4-1, Meguro 1-chome, Meguro-ku, Tokyo 153-8654, Japan
PIONEER ELECTRONICS SERVICE, INC. P.O. Box 1760, Long Beach, CA 90801-1760, U.S.A.
PIONEER ELECTRONIC NV Haven 1087, Keetberglaan 1, 9120 Melsele, Belgium
PIONEER ELECTRONICS ASIACENTRE PTE. LTD. 253 Alexandra Road, #04-01, Singapore 159936

T – ZZY JULY 2001 Printed in Japan

1. SAFETY INFORMATION

This service manual is intended for qualified service technicians ; it is not meant for the casual do-it-yourselfer. Qualified technicians have the necessary test equipment and tools, and have been trained to properly and safely repair complex products such as those covered by this manual.
Improperly performed repairs can adversely affect the safety and reliability of the product and may void the warranty. If you are not qualified to perform the repair of this product properly and safely, you should not risk trying to do so and refer the repair to a qualified service technician.

WARNING
This product contains lead in solder and certain electrical parts contain chemicals which are known to the state of California to cause cancer, birth defects or other reproductive harm.

Health & Safety Code Section 25249.6 – Proposition 65

NOTICE
(FOR CANADIAN MODEL ONLY)
Fuse symbols (fast operating fuse) and/or (slow operating fuse) on PCB indicate that replacement parts must be of identical designation.

REMARQUE
(POUR MODÈLE CANADIEN SEULEMENT)
Les symboles de fusible (fusible de type rapide) et/ou (fusible de type lent) sur CCI indiquent que les pièces de remplacement doivent avoir la même désignation.

1.1 SAFETY PRECAUTIONS

NOTICE : Comply with all cautions and safety related notes located on or inside the cabinet and on the chassis or picture tube.

The following precautions should be observed :

1. Do not install, remove, or handle the picture tube in any manner unless shatterproof goggles are worn.
   People not so equipped should be kept away while picture tubes are handled.
   Keep picture tube away from the while handling.
2. When service is required, even though the HDTV PROJECTION MONITOR an isolation transformer should be inserted between power line and the set in safety before any service is performed.
3. When replacing a chassis in the set, all the protective devices must be put back in place, such as barriers, nonmetallic knobs, adjustment and compartment covershields, isolation resistor-capacitor, etc.
4. When service is required, observe the original lead dress. Extra precaution should be taken to assure correct lead dress in the high voltage circuitry area.
5. Always use the manufacture's replacement components. Especially critical components as indicated on the circuit diagram should not be replaced by other manufacture's.
   Furthermore where a short circuit has occurred, replace those components that indicate evidence of overheating.
6. Before returning a serviced set to the customer, the service technician must thoroughly test the unit to be certain that it is completely safe to operate without danger of electrical shock, and be sure that no protective device built into the set by the manufacture has become defective, or inadvertently defeated during servicing.
   Therefore, the following checks should be performed for the continued protection of the customer and service technician.

Leakage Current Cold Check

With the AC plug removed from the 120V AC 60Hz source, place a jumper across the two plug prongs. Turn the AC power switch on. Using an insulation tester (DC 500V), connect one lead to the jumpered AC plug and touch the other lead to each exposed metal part (input/output terminals, screwheads, metal overlays, control shafts, etc.), particularly any exposed metal part having a return path to the chassis should have a minimum resistor reading of 0.3MΩ and a maximum resistor reading of 5MΩ. Any resistor value below or above this range indicates an abnormality which requires corrective action. Exposed metal parts not having a return path to the chassis will indicate an open circuit.

Leakage Current Hot Check

Plug the AC line cord directly into a 120V AC 60Hz outlet (do not use an isolation transformer for this check). Turn the AC power switch on.
Using a "Leakage Current Tester (Simpson Model 229 equivalent)", measure for current from all exposed metal parts of the cabinet (input/output terminals, screwheads, metal overlays, control shaft, etc.), particularly any exposed metal part having a return path to the chassis, to a known earth ground (water pipe, conduit, etc.). Any current measured must not exceed 0.5mA.

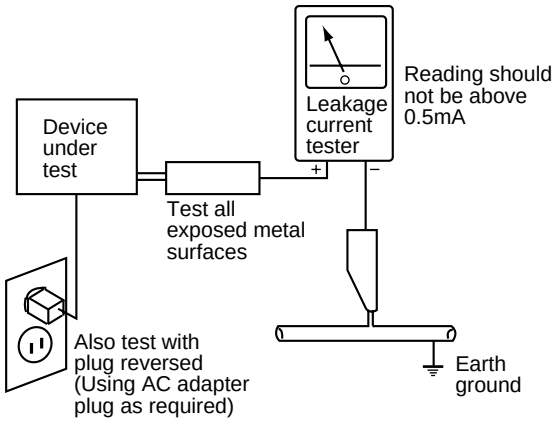

AC Leakage Test

ANY MEASUREMENTS NOT WITHIN THE LIMITS OUTLINED ABOVE ARE INDICATIVE OF A POTENTIAL SHOCK HAZARD AND MUST BE CORRECTED BEFORE RETURNING THE SET TO THE CUSTOMER.

High Voltage

This set is provided with a X-ray protection for clearly indicating that voltage has increased in excess of a predetermined value. Comply with all notes described in this Service Manual regarding this hold down circuit when servicing, so that this X-ray protection may correctly be operated.

Serviceman Warning

In the status of the black picture (video muting is being applied) when no signal is input, high voltage of this set during operation is less than 30.5kV. In case any component having some relation to the high voltage is replaced, confirm that the high voltage is lower than 30.5kV in the status of the black picture when no signal is input.
To measure H. V. use a high impedance H. V. meter.
Connect (–) to earth and (+) to the FBT anode cable connector. (Refer to section "7.1.2 DISASSEMBLY".)

X-radiation

TUBE : The primary source of X-radiation in this set is the picture tube.
For continued X-radiation protection, the replacement tube must be the same type as the original, PIONEER approved type.
The picture tube (CRT Service Assy R, G, B) used in this set holds complete guarantee against X-ray radiation when the X-ray is sealed (See page 4). Accordingly, when the current in flowing to the picture tube (CRT Service Assy R, G, B), be sure to perform it by putting the tube into X-ray sealed applied state. Avoid absolutely to flow the current to the picture tube (CRT Service Assy R, G, B) itself. Moreover, when the voltage of the high voltage circuit becomes abnormally a little higher, the picture tube radiates X-rays.
Accordingly, when servicing the high voltage circuit be sure to replace as an assy with the POWER SUPPLY Assy in the manner in which has been adjusted to perform normal operation.

1.2 PRODUCT SAFETY NOTICE

Many electrical and mechanical parts in PIONEER set have special safety related characteristics. These are often not evident from visual inspection nor the protection afforded by them necessarily can be obtained by using replacement components rated for higher voltage, wattage, etc. Replacement parts which have these special safety characteristics are identified in this Service Manual.
Electrical components having such features are identified by marking with a ⚠ on the schematics and on the parts list in this Service Manual.
The use of a substitute replacement component which dose not have the same safety characteristics as the PIONEER recommended replacement one, shown in the parts list in this Service Manual, may create shock, fire, X-radiation, or other hazards.
Product Safety is continuously under review and new instructions are issued from time to time. For the latest information, always consult the current PIONEER Service Manual. A subscription to, or additional copies of, PIONEER Service Manual may be obtained at a nominal charge from PIONEER.

1.3 CHARGED SECTION, HIGH VOLTAGE GENERATING POINT AND X-RAY PROTECTION

Charged section

The circuit in which the commercial AC power is used as it is without passing through the power supply transformer.
If the charged section is touched, there is a risk of electric shock. In addition, the measuring equipment can be damaged if it is connected to the GND of the charged section and the GND of the non-charged section while connecting the set directly to the commercial AC power supply, In this case, be sure to connect the set via an insulated transformer and supply the current.

Charged section (Power supply primary side)

1. AC Power Cord
2. The primary side of the POWER SUPPLY Assy
3. POWER SW Assy

: Part is charged section.

: Part is the high voltage generating points other than the charged section.

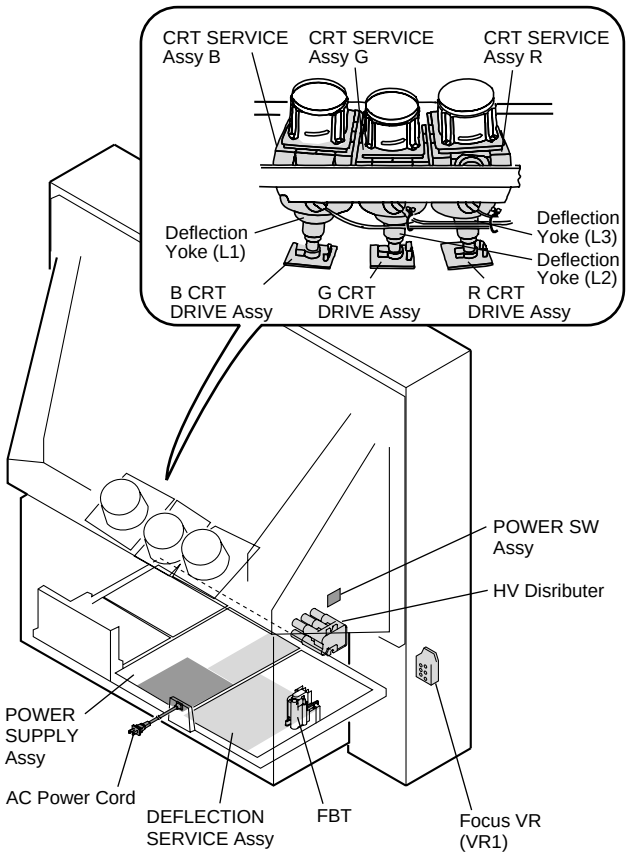

Fig.1 Carged Section and High Voltage Generation Point

High voltage generating point

The place where voltage of over 100V is generated.

1. Charged section
2. DEFLECTION Service Assy (including FBT) (30.5kV, 1.2kV, 210V, 135V)
3. POWER SUPPLY Assy (135V)
4. R CRT DRIVE Assy (10.5kV, 210V)
5. G CRT DRIVE Assy (10.5kV, 210V)
6. B CRT DRIVE Assy (10.5kV, 210V)
7. CRT Service Assy R (30.5kV)
8. CRT Service Assy G (30.5kV)
9. CRT Service Assy B (30.5kV)
10. Focus VR (VR1) (10.5kV)
11. Deflection Yokes (L1, L2 and L3) Approx. (1100V at peak)
12. HV Distibuter (Anode) (30.5kV)

X-ray protection

- Regarding the parts which are relative to radiation of X-rays (There is the danger to radiate X-ray from the individual CRT Service Assy R, G, B), there are notifications of caution in the individual schematic diagrams. Be sure to read them for safety's sake.
- The component parts for X-ray protection are as follows:
  When the current flows to the CRT Service Assy R, G, B, be sure to perform it with these parts being attached.
  Protection from the X-ray radiation is maintained in the state in which these parts have been installed to the CRT Service Assy R, G, B. Accordingly, never supply current only to the CRT Service Assy R, G, B.
  Moreover, the anode voltage of the CRT Service Assy R, G, B should always be kept not higher than the predetermined value (in the minimum brightness and picture state when non signal input is less than 30.5kV). Be sure to drive the CRT Service Assy R, G, B by using a completely functional Deflection Service Assy (including FBT) which have been adjusted completely in the combined state. (When the voltage abnormally becomes high, the X-ray protection circuit will operate.)

1. CRT Service Assy R, G, B (Do not dismantle CRT assemblies under any circumstances).
2. Each Lens Assy

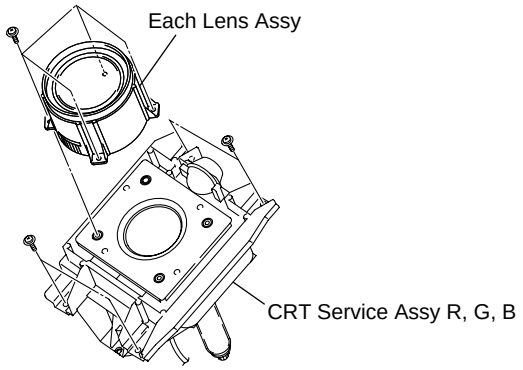

Fig.2 Component parts for X-ray protection

2. EXPLODED VIEWS AND PARTS LIST

NOTES:
- *Parts marked by "NSP" are generally unavailable because they are not in our Master Spare Parts List.*
- *The ⚠ mark found on some component parts indicates the importance of the safety factor of the part. Therefore, when replacing, be sure to use parts of identical designation.*
- *Parts marked by ☆ are important parts which relate in X-rays radiation. If any of there parts need to be replaced, always replace with specified parts.*
- *Screws adjacent to ▼ mark on the product are used for disassembly.*

2.1 PACKING

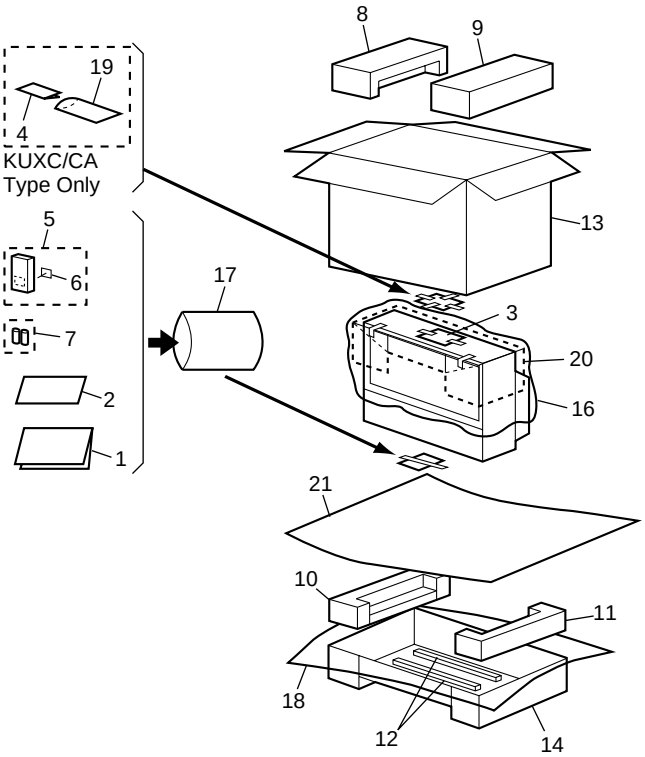

(1) PACKING PARTS LIST

Mark	No.	Description	Part No.
	1	Operating Instructions (English)	ARB1535
NSP	2	Caution Card	ARM1057
	3	Convergence Attention Card	ARM1197
NSP	4	Warranty Card	See Contrast table (2)
	5	Remote Control Unit	AXD1457
	6	Battery Cover	AZN2401
NSP	7	Alkaline Dry Cell Battery (LR6, AA)	AEX1018
	8	Upper Pad L	See Contrast table (2)
	9	Upper Pad R	See Contrast table (2)
	10	Under Pad L	See Contrast table (2)
	11	Under Pad R	See Contrast table (2)
	12	Under Pad S	AHA2278
	13	Upper Carton	See Contrast table (2)
	14	Under Carton	See Contrast table (2)
	15	• • • • •	
NSP	16	Vinyl Sheet	See Contrast table (2)
NSP	17	Catalog Bag	AHG1222
	18	Vinyl Sheet Under	See Contrast table (2)
NSP	19	Polyethylene Bag	See Contrast table (2)
NSP	20	Laminated Sheet Upper	AHG1311
NSP	21	Laminated Sheet Under	See Contrast table (2)

(2) CONTRAST TABLE

SD-533HD5/KUXC/CA, KBXC and SD-643HD5/KUXC/CA are constructed the same except for the following :

Mark	No.	Symbol and Description	Part No.			Remarks
			SD-533HD5		SD-643HD5	
			KUXC/CA	KBXC	KUXC/CA	
NSP	4	Warranty Card	ARY1050	Not used	ARY1050	
	8	Upper Pad L53	AHA2270	AHA2270	Not used	
	8	Upper Pad L64	Not used	Not used	AHA2274	
	9	Upper Pad R53	AHA2271	AHA2271	Not used	
	9	Upper Pad R64	Not used	Not used	AHA2275	
	10	Under Pad L53	AHA2272	AHA2272	Not used	
	10	Under Pad L64	Not used	Not used	AHA2276	
	11	Under Pad R53	AHA2273	AHA2273	Not used	
	11	Under Pad R64	Not used	Not used	AHA2277	
	13	Upper Carton 53	AHD3081	AHD3081	Not used	
	13	Upper Carton 64	Not used	Not used	AHD3082	
	14	Under Carton 53	AHD3083	AHD3083	Not used	
	14	Under Carton 64	Not used	Not used	AHD3084	
NSP	16	Vinyl Sheet XL	AHG1095	AHG1095	Not used	
NSP	16	Vinyl Sheet 64W Upper	Not used	Not used	AHG1288	
	18	Vinyl Sheer 60 Under	AHG1234	AHG1234	Not used	
	18	Vinyl Sheet 64W Under	Not used	Not used	AHG1289	
NSP	19	Polyethylene Bag	AHG1285	Not used	AHG1285	
NSP	21	Laminated Sheet 53 Under	AHG1312	AHG1312	Not used	
NSP	21	Laminated Sheet 64 Under	Not used	Not used	AHG1314	

2.2 FRONT SECTION

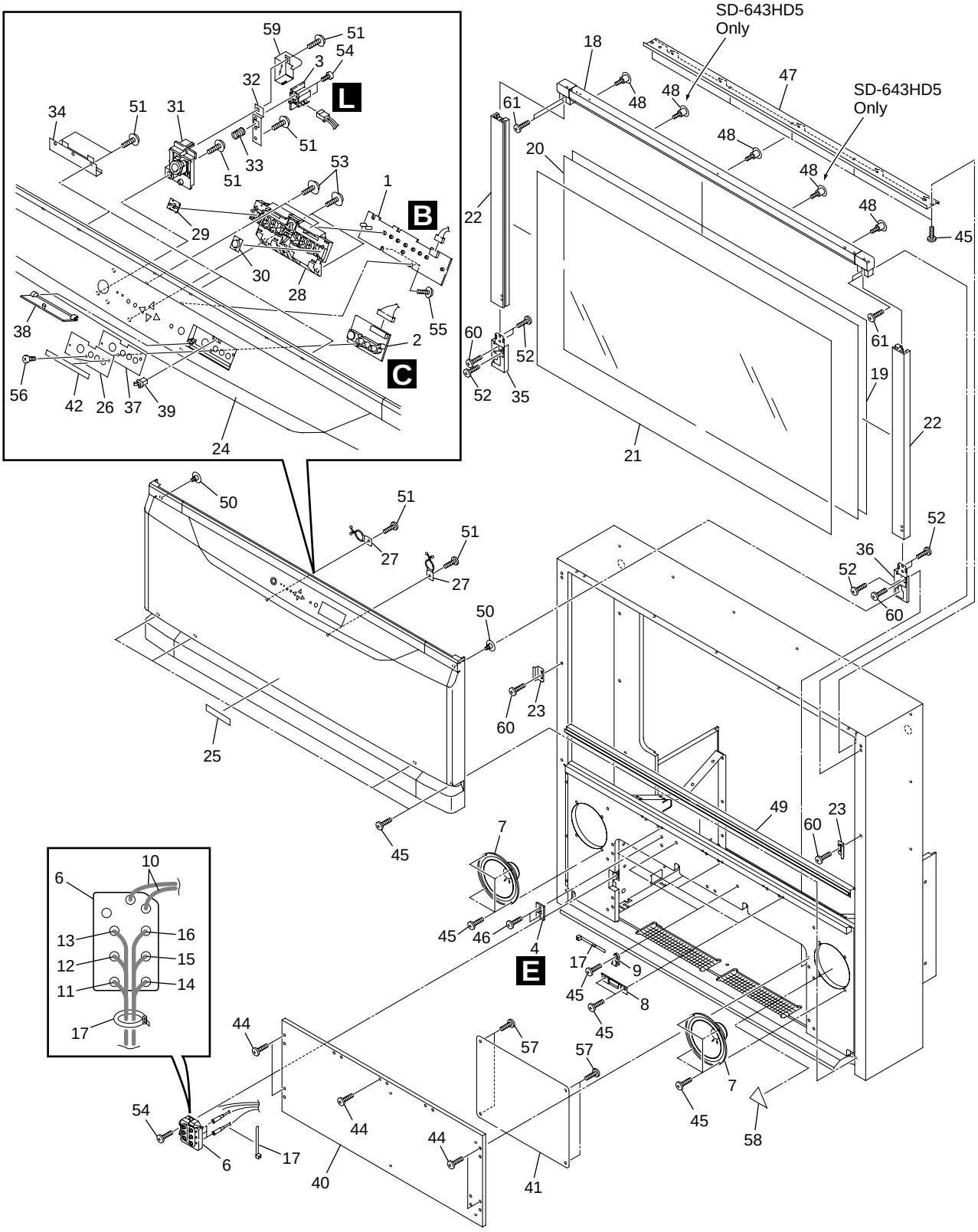

(1) FRONT SECTION PARTS LIST

Mark	No.	Description	Part No.
	1	FRONT LED Assy	AWZ6608
	2	FRONT INPUT Assy	AWZ6609
	3	POWER SW Assy	AWZ6611
	4	SHORT Assy	AWZ6612
	5	• • • • •	
⚠	6	Focus VR (VR1)	ACX1097
	7	Cone Speaker	APV1021
NSP	8	Decor. Panel Holder B	ANG2450
NSP	9	Bind Holder	AEC1785
	10	4P Housing Wire (J2)	ADX2665
	11	1P Lead Wire (J3 : RED)	ADX2659
	12	1P Lead Wire (J4 : WHT)	ADX2660
	13	1P Lead Wire (J5 : BLK)	ADX2661
	14	1P Lead Wire (J6 : RED)	ADX2662
	15	1P Lead Wire (J7 : GRN)	ADX2663
	16	1P Lead Wire (J8 : BLU)	ADX2664
	17	Nylon Binder	AEC-093
	18	Screen Frame H Assy	See Contrast table (2)
	19	Fresnel	See Contrast table (2)
	20	Lenticular Sheet	See Contrast table (2)
	21	Contrast Screen	See Contrast table (2)
	22	Screen Frame V	See Contrast table (2)
NSP	23	SF Bracket V	ANG2479
	24	Decoration Panel	See Contrast table (2)
	25	Badge	AAM1088
	26	Input Sheet	AAK2771
NSP	27	Cabinet Wire Holder	AEC1263
	28	Button Cluster	AAD4107
	29	LED Lens	AAK2769
	30	RLS Lens	AAK2770
	31	Power Button	AAD4108
NSP	32	Switch Holder	ANG2448
	33	Power Button Spring	ABH1106
NSP	34	Decor. Panel Holder A	ANG2449
NSP	35	SF Under Bracket L	ANG2445
NSP	36	SF Under Bracket R	ANG2446
NSP	37	Front Plate	ANG2474
	38	Door	AAN1462
	39	Catcher F2M	AEC1609
NSP	40	Blind Plate	AMM3089
	41	Front Shield Plate	ANK1686
	42	Door Cushion	AEC1892
	43	• • • • •	
	44	Screw	ABA1249
	45	Screw	ABA1240
	46	Screw	ABA1239
NSP	47	SF Holder	See Contrast table (2)
	48	Screw	ABA1190
	49	Screen Holder Low	See Contrast table (2)
	50	Screw	ABA1288
	51	Screw	APZ40P120FZK
	52	Screw	BYC40P160FMC
	53	Screw	ABA1289
	54	Screw	BBZ30P080FZK
	55	Screw	APZ30P080FZK
	56	Screw	BPZ30P100FZK
	57	Screw	ABA1298
NSP	58	UL Caution Card	AAX1238
	59	Switch Cover	AMR3272
	60	Screw	ABA1286
	61	Screw	ABA1299

(2) CONTRAST TABLE

SD-533HD5/KUXC/CA, KBXC and SD-643HD5/KUXC/CA are constructed the same except for the following :

Mark	No.	Symbol and Description	Part No.			Remarks
			SD-533HD5		SD-643HD5	
			KUXC/CA	KBXC	KUXC/CA	
	18	Screen Frame H Assy 53	AAP1641		Not used	
	18	Screen Frame H Assy 64	Not used		AAP1642	
	19	Fresnel 53	AMR3181		Not used	
	19	Fresnel 64	Not used		AMR3279	
	20	Lenticular Sheet 53	AMR3179		Not used	
	20	Lenticular Sheet 64	Not used		AMR3239	
	21	Contrast Screen (53W)	AAK2785		Not used	
	21	Contrast Screen 64	Not used		AAK2773	
	22	Screen Frame V 53	AAP1639		Not used	
	22	Screen Frame V 64	Not used		AAP1640	
	24	Decoration Panel 53	AMB2685		Not used	
	24	Decoration Panel 64	Not used		AMB2686	
NSP	47	SF Holder 53	ANG2437		Not used	
NSP	47	SF Holder 64	Not used		ANG2438	
	49	Screen Holder Low 53	AAP1647		Not used	
	49	Screen Holder Low 64	Not used		AAP1648	

2.3 REAR SECTION

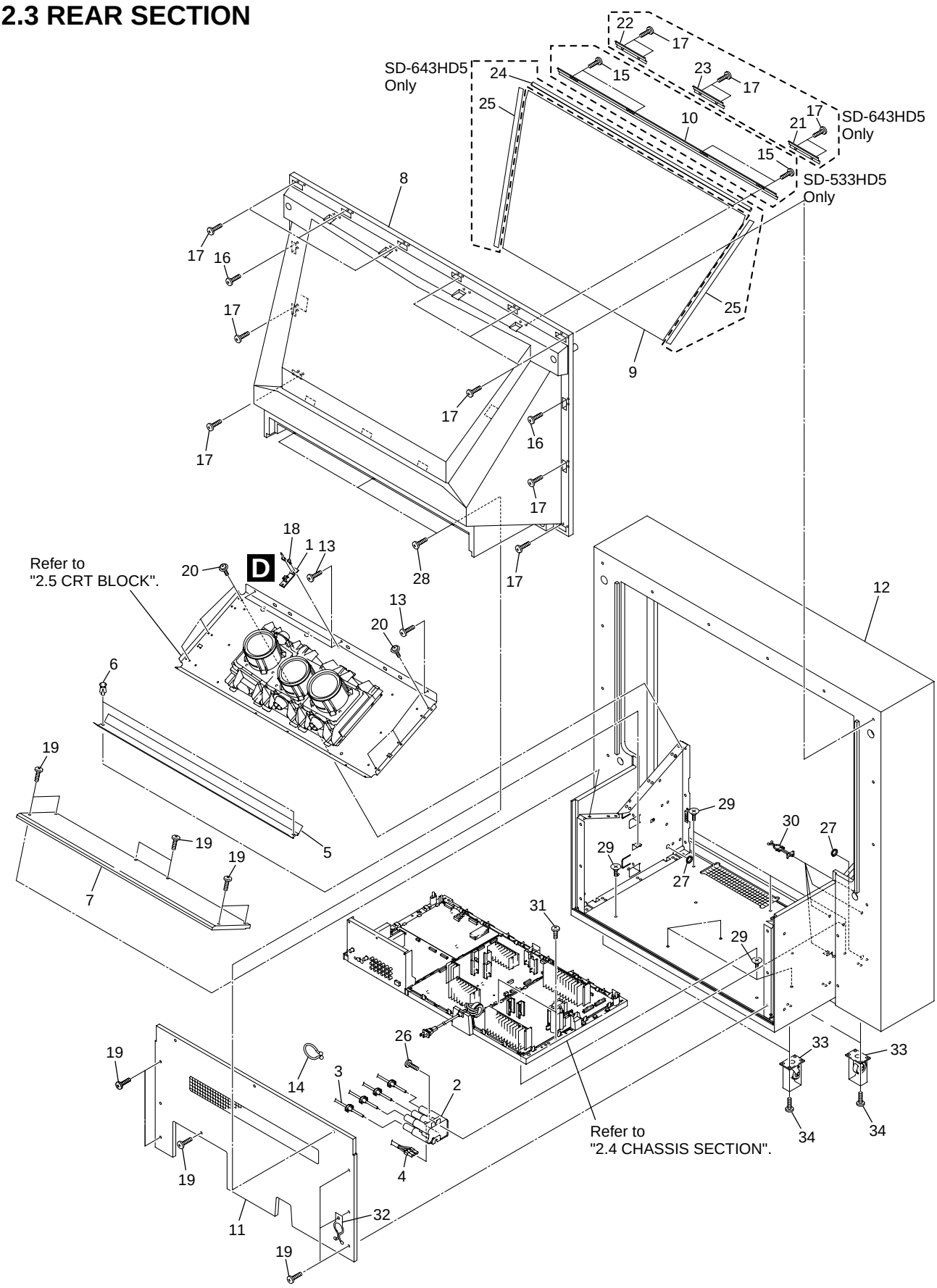

(1) REAR SECTION PARTS LIST

Mark	No.	Description	Part No.
	1	REMOTE SENSOR Assy	AWZ6610
⚠	2	HV Distributer	AXW1050
	3	HV Cable (J12)	ADY1064
	4	HV Return Wire (J16)	ADX2658
NSP	5	Tray	AMR3243
	6	Rivet	AEC1890
NSP	7	Back Cover Panel	AMM3086
	8	Mirror Case	AME2305
	9	Mirror	See Contrast table (2)
NSP	10	Mirror Holder	See Contrast table (2)
	11	Rear Cover	See Contrast table (2)
NSP	12	Cabinet	See Contrast table (2)
	13	Screw	ABA1239
	14	Purse Lock	AEC1540
	15	Screw	See Contrast table (2)
	16	Screw	See Contrast table (2)
	17	Screw	ABA1240
	18	Screw	BBZ30P080FZK
	19	Screw	ABA1286
	20	Screw	ACZ40P080FMC
NSP	21	Mirror Upper Stay L	See Contrast table (2)
NSP	22	Mirror Upper Stay R	See Contrast table (2)
NSP	23	Mirror Upper Stay C	See Contrast table (2)
	24	Mirror Frame H64	See Contrast table (2)
	25	Mirror Frame V64	See Contrast table (2)
	26	Screw	ABZ30P120FZK
	27	Bushing	AEC1869
	28	Screw	ABA1249
	29	Screw	ABA1234
NSP	30	Lead Clamper M	AEC1611
	31	Screw	ABA1296
NSP	32	Cabinet Wire Holder	AEC1263
	33	Caster	AMR2547
	34	Screw	ABA1287

(2) CONTRAST TABLE

SD-533HD5/KUXC/CA, KBXC and SD-643HD5/KUXC/CA are constructed the same except for the following :

Mark	No.	Symbol and Description	Part No.			Remarks
			SD-533HD5		SD-643HD5	
			KUXC/CA	KBXC	KUXC/CA	
	9	Mirror 53	AMR3244		Not used	
	9	Mirror 64	Not used		AMR3245	
NSP	10	Mirror Holder	ANG2440		Not used	
	11	Rear Cover 53	AMM3087		Not used	
	11	Rear Cover 64	Not used		AMM3088	
NSP	12	Cabinet 53	AMM3098		Not used	
NSP	12	Cabinet 64	Not used		AMM3099	
	15	Screw	APZ40P120FZK		Not used	
	16	Screw	ABA1240		PYC40T140FZB	
NSP	21	Mirror Upper Stay L	Not used		ANG2004	
NSP	22	Mirror Upper Stay R	Not used		ANG2005	
NSP	23	Mirror Upper Stay C	Not used		ANG2006	
	24	Mirror Frame H 64	Not used		ANG2441	
	25	Mirror Frame V 64	Not used		ANG2442	

2.4 CHASSIS SECTION

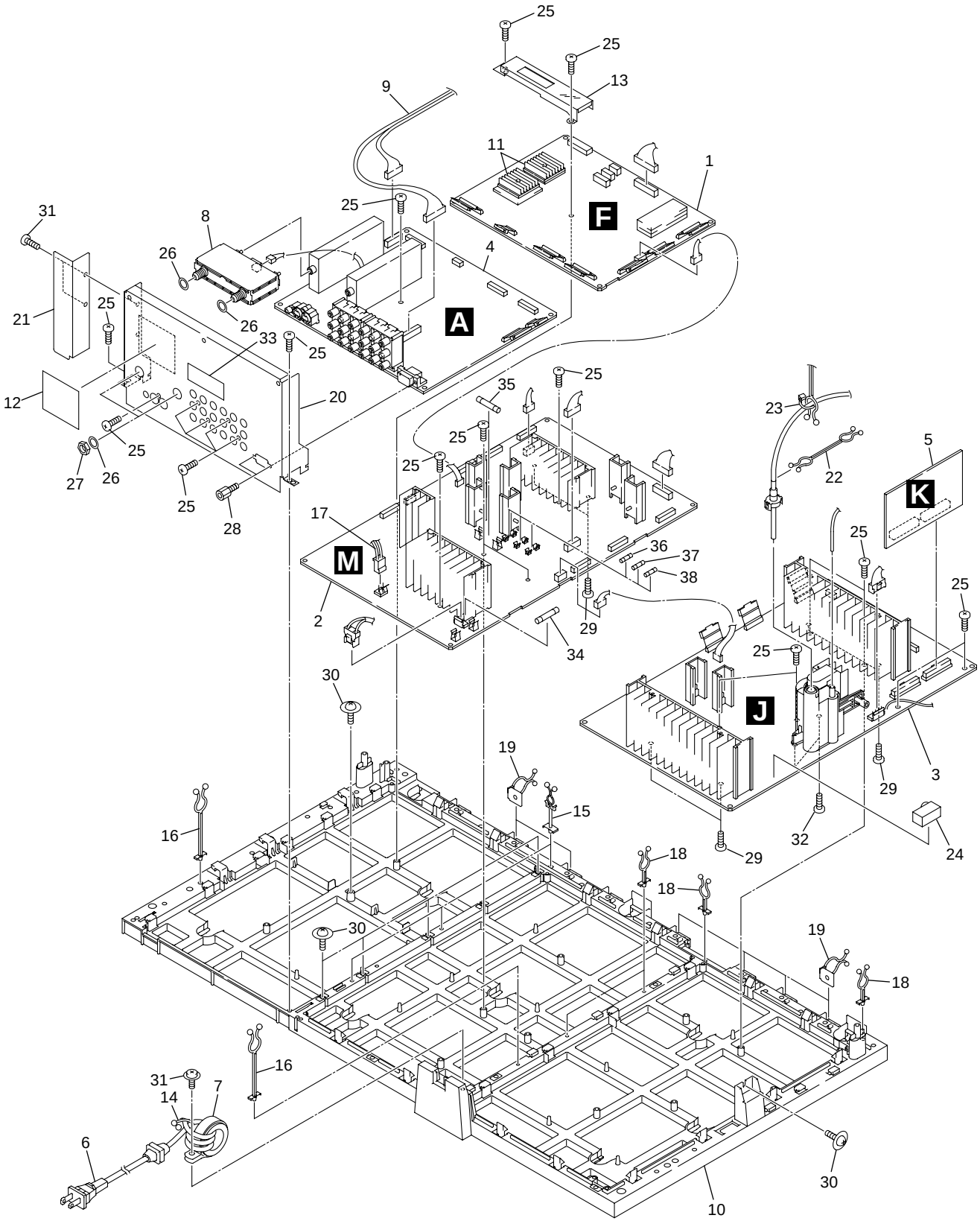

(1) CHASSIS SECTION PARTS LIST

Mark	No.	Description	Part No.
	1	VIDEO IP SERVICE Assy	AWV1910
	2	POWER SUPPLY Assy	AWV1887
☆	3	DEFLECTION SERVICE Assy	AWV1909
	4	SIGNAL Assy	AWV1891
	5	DIGITAL CONV. Assy	AWV1892
⚠	6	AC Power Cord	ADG1187
	7	Ferrite Core (L7)	ATX1040
	8	RF Switch	AXF1109
	9	Wire Harness A	ADX2666
NSP	10	Chassis	AMA1012
NSP	11	IP Heat Sink	ANH1591
NSP	12	ID Label	See Contrast table (2)
NSP	13	IP Heat Sink Holder	AMR3260
	14	Nylon Binder	AEC-093
NSP	15	Lead Clamper M	AEC1611
	16	Cord Holder	AEC1257
	17	2P Lead with Housing (J9)	ADX2657
	18	Cable Clip	AEC1806
NSP	19	Cabinet Wire Holder	AEC1263
	20	Rear Panel	ANC2339
	21	Rear Shield	ANK1687
NSP	22	Cable Clip	AEC1369
	23	Binder	AEC1793
	24	Volume Case	ANK1682
	25	Screw	BPZ30P140FZK
	26	Washer	WAX0F160N100
	27	Nut	BBN1005
	28	Hexagonal Head Screw	BBA1051
	29	Screw	BBZ30P080FCU
	30	Screw	ABA1235
	31	Screw	ABZ30P120FZK
	32	Screw	BPZ30P100FZK
NSP	33	EMC Label	See Contrast table (2)
⚠	34	Fuse (FU201 : 10A/ 250V)	AEK1069
⚠	35	Fuse (FU301 : 10A/ 250V)	AEK1069
⚠	36	Fuse (FU302 : 5A/ 125V)	REK1083
⚠	37	Fuse (FU303 : 4A/ 125V)	REK1082
⚠	38	Fuse (FU304 : 4A/ 125V)	REK1082

(2) CONTRAST TABLE

SD-533HD5/KUXC/CA, KBXC and SD-643HD5/KUXC/CA are constructed the same except for the following :

Mark	No.	Symbol and Description	Part No.			Remarks
			SD-533HD5		SD-643HD5	
			KUXC/CA	KBXC	KUXC/CA	
NSP	12	ID Label 53	AAL2341	AAL2350	Not used	
NSP	12	ID Label 64	Not used	Not used	AAL2342	
NSP	33	EMC Label	Not used	AAX2843	Not used	

2.5 CRT BLOCK

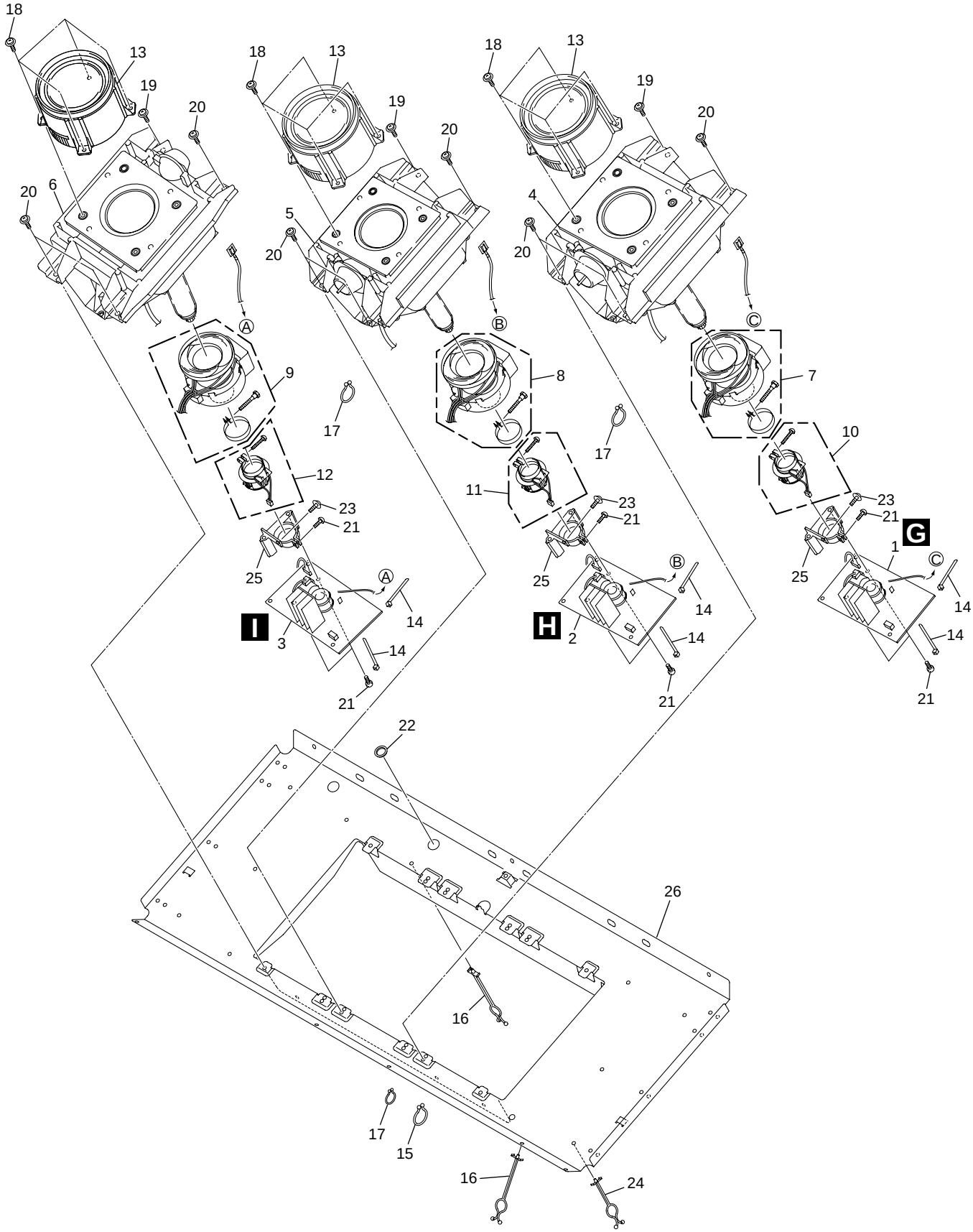
18
13
19
20
6
20
18
13
19
20
5
20
18
13
19
20
4
20
A
B
C
9
8
7
17
17
10
12
11
23
21
23
21
23
21
G
1
25
25
25
A
B
C
14
14
14
14
I
H
3
2
14
14
21
21
21
22
26
16
17
15
16
24

(1) CRT BLOCK PARTS LIST

Mark	No.	Description	Part No.
	1	R CRT DRIVE Assy	AWZ6605
	2	G CRT DRIVE Assy	AWZ6606
	3	B CRT DRIVE Assy	AWZ6607
☆	4	CRT SERVICE Assy R	See Contrast table (2)
☆	5	CRT SERVICE Assy G	See Contrast table (2)
☆	6	CRT SERVICE Assy B	See Contrast table (2)
⚠	7	Deflection Yoke (L1)	ATL1144
⚠	8	Deflection Yoke (L2)	ATL1144
⚠	9	Deflection Yoke (L3)	ATL1144
⚠	10	VM Coil (L4)	ATL1137
⚠	11	VM Coil (L5)	ATL1137
⚠	12	VM Coil (L6)	ATL1137
☆	13	Lens Assy	See Contrast table (2)
	14	Nylon Binder	AEC-093
	15	Purse Lock	AEC1540
	16	Cord Holder	AEC1257
NSP	17	Purse Lock S	AEC1261
	18	Screw	AMZ40P080FZK
	19	Screw	FBT40P120FZK
	20	Screw	ABA1168
	21	Screw	BPZ30P100FZK
	22	Bushing	AEC1869
	23	Screw	PMB30P100FMC
	24	Lead Clamper M	AEC1611
	25	CRT Amp Holder	AMR3241
NSP	26	CRT Stand	See Contrast table (2)

(2) CONTRAST TABLE

SD-533HD5/KUXC/CA, KBXC and SD-643HD5/KUXC/CA are constructed the same except for the following :

Mark	No.	Symbol and Description	Part No.			Remarks
			SD-533HD5		SD-643HD5	
			KUXC/CA	KBXC	KUXC/CA	
☆	4	CRT SERVICE Assy 53R	AWY1424		Not used	
☆	4	CRT SERVICE Assy 64R	Not used		AWY1427	
☆	5	CRT SERVICE Assy G	AWY1423		AWY1426	
☆	6	CRT SERVICE Assy 53B	AWY1425		Not used	
☆	6	CRT SERVICE Assy 64B	Not used		AWY1428	
☆	13	LENS Assy	AMR2833		AMR3235	
NSP	26	CRT Stand 53	ANA1653		Not used	
NSP	26	CRT Stand 64	Not used		ANA1654	

3. BLOCK DIAGRAM AND SCHEMATIC DIAGRAM

3.1 BLOCK DIAGRAM

3.1.1 OVERALL BLOCK DIAGRAM

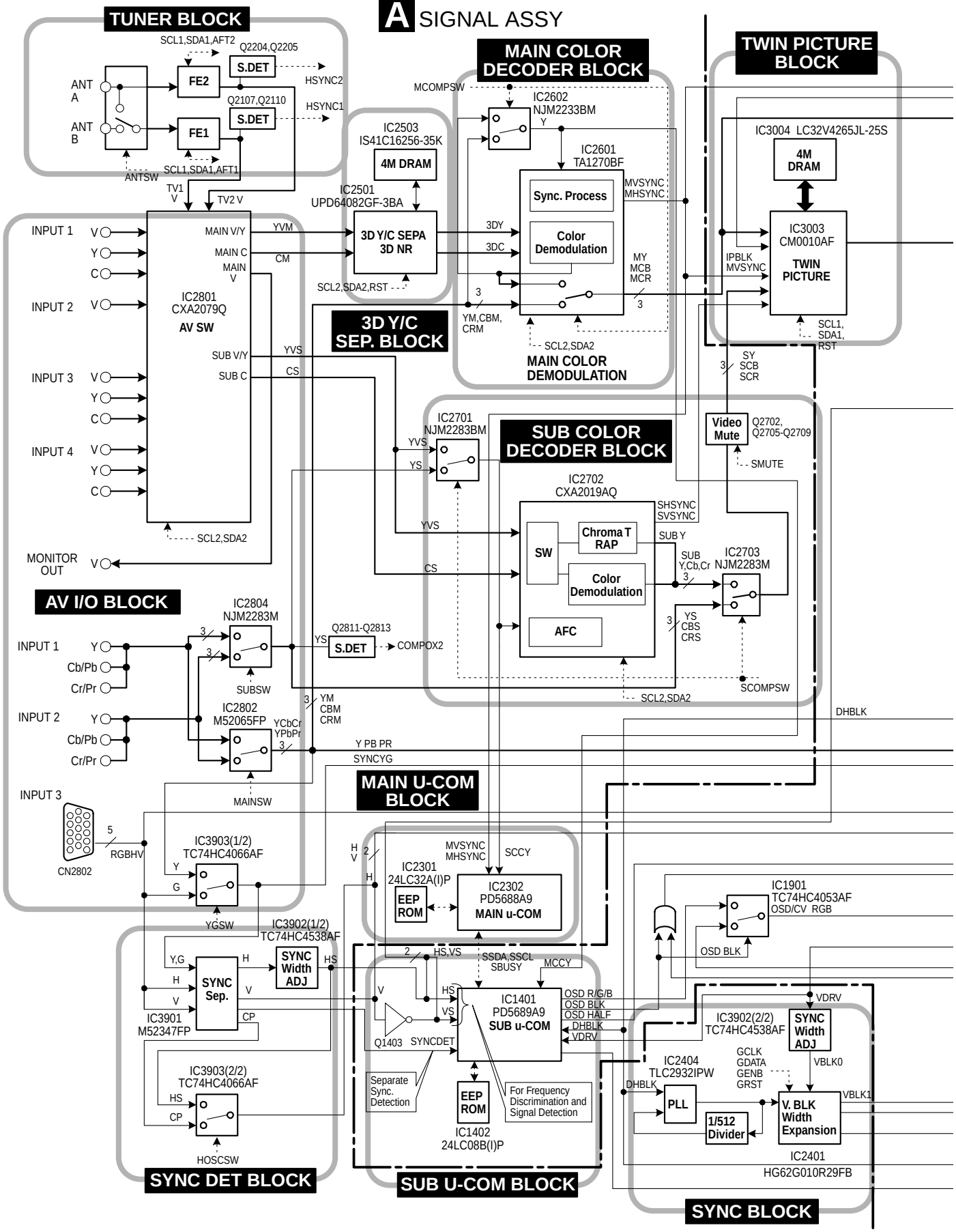

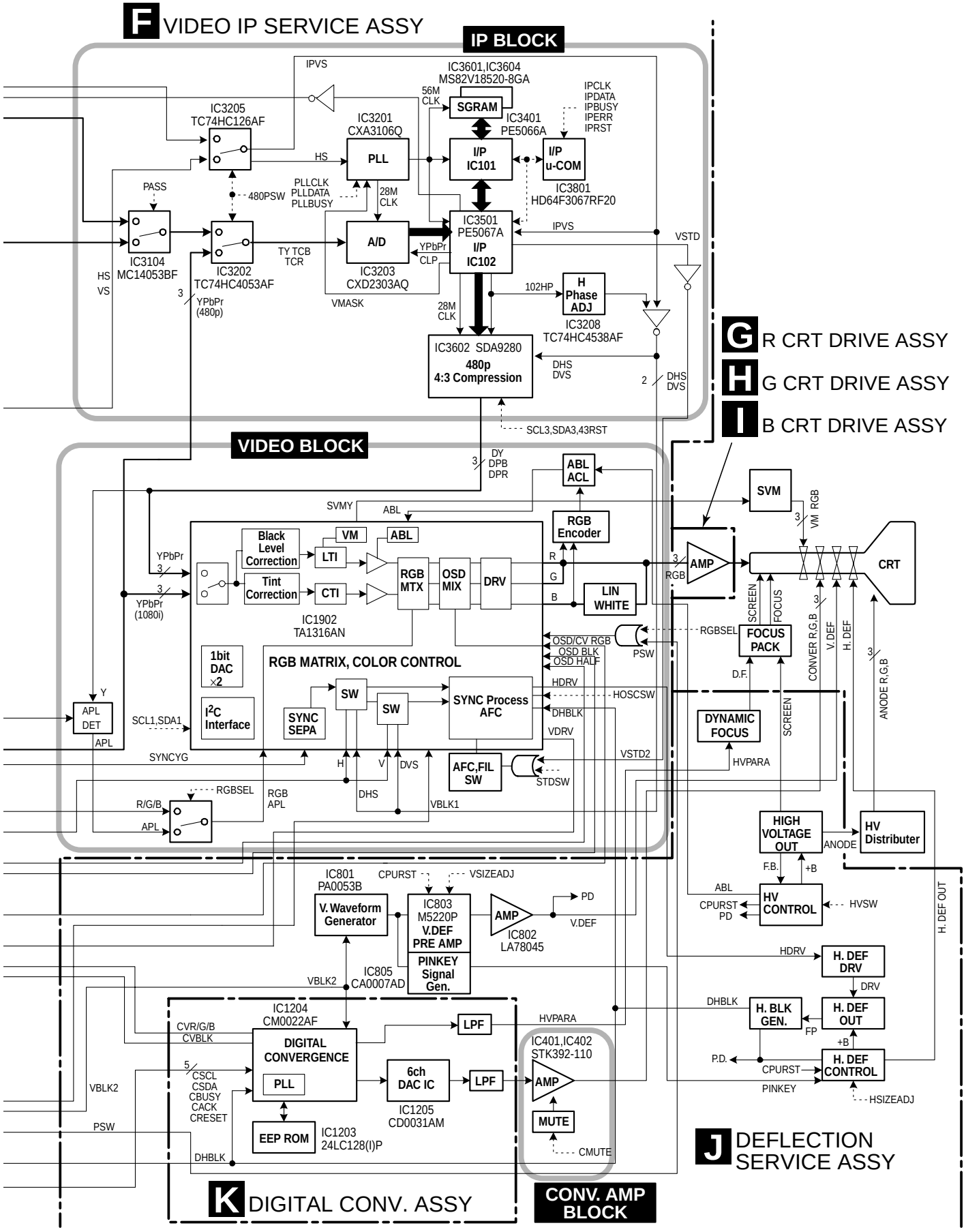
F VIDEO IP SERVICE ASSY
IP BLOCK
IPVS
IC3601,IC3604
MS82V18520-8GA
56M CLK
SGRAM
IPCLK
IPDATA
IPBUSY
IPERR
IPRST
IC3205
TC74HC126AF
IC3201
CXA3106Q
IC3401
PE5066A
HS
PLL
I/P
IC101
I/P
u-COM
PASS
480PSW
PLLCLK
PLLDATA
PLLBUSY
28M CLK
IC3801
HD64F3067RF20
IC3501
PE5067A
I/P
IC102
IPVS
VSTD
IC3104
MC14053BF
HS
VS
IC3202
TC74HC4053AF
TY TCB
TCR
A/D
YPbPr
CLP
IC3203
CXD2303AQ
3
YPbPr
(480p)
VMASK
102HP
H
Phase
ADJ
IC3208
TC74HC4538AF
28M CLK
IC3602 SDA9280
480p
4:3 Compression
DHS
DVS
2
DHS
DVS
SCL3,SDA3,43RST
G R CRT DRIVE ASSY
H G CRT DRIVE ASSY
I B CRT DRIVE ASSY
VIDEO BLOCK
3
DY
DPB
DPR
ABL
ACL
SVM
SVMY
ABL
RGB
Encoder
3
VM RGB
YPbPr
3
Black
Level
Correction
VM
ABL
LTI
R
G
B
RGB
MTX
OSD
MIX
DRV
3
RGB
AMP
CRT
3
YPbPr
(1080i)
Tint
Correction
CTI
LIN
WHITE
SCREEN
FOCUS
3
IC1902
TA1316AN
RGBSEL
FOCUS
PACK
OSD/CV RGB
OSD BLK
OSD HALF
PSW
1bit
DAC
×2
RGB MATRIX, COLOR CONTROL
D.F.
CONVER R,G,B
V.DEF
H. DEF
3
ANODE R,G,B
Y
APL
DET
HDRV
SW
SW
SYNC Process
AFC
HOSCSW
DHBLK
SCL1,SDA1
I2C
Interface
SYNC
SEPA
VDRV
DYNAMIC
FOCUS
SCREEN
APL
SYNCYG
H
V
DVS
AFC,FIL
SW
VSTD2
HVPARA
STDSW
RGBSEL
RGB
APL
DHS
VBLK1
R/G/B
APL
HIGH
VOLTAGE
OUT
ANODE
HV
Distributer
F.B.
+B
IC801
PA0053B
CPURST
VSIZEADJ
ABL
V. Waveform
Generator
IC803
M5220P
V.DEF
PRE AMP
AMP
PD
V.DEF
IC802
LA78045
CPURST
PD
HV
CONTROL
HVSW
H. DEF OUT
HDRV
H. DEF
DRV
VBLK2
IC805
CA0007AD
PINKEY
Signal
Gen.
DRV
DHBLK
H. BLK
GEN.
H. DEF
OUT
IC1204
CM0022AF
HVPARA
FP
CVR/G/B
CVBLK
DIGITAL
CONVERGENCE
LPF
IC401,IC402
STK392-110
+B
P.D.
CPURST
H. DEF
CONTROL
5
CSCL
CSDA
CBUSY
CACK
CRESET
PLL
6ch
DAC IC
LPF
AMP
PINKEY
HSIZEADJ
VBLK2
IC1205
CD0031AM
MUTE
PSW
EEP ROM
IC1203
24LC128(I)P
CMUTE
DHBLK
J DEFLECTION
SERVICE ASSY
K DIGITAL CONV. ASSY
CONV. AMP
BLOCK

3.1.2 U-COM BLOCK

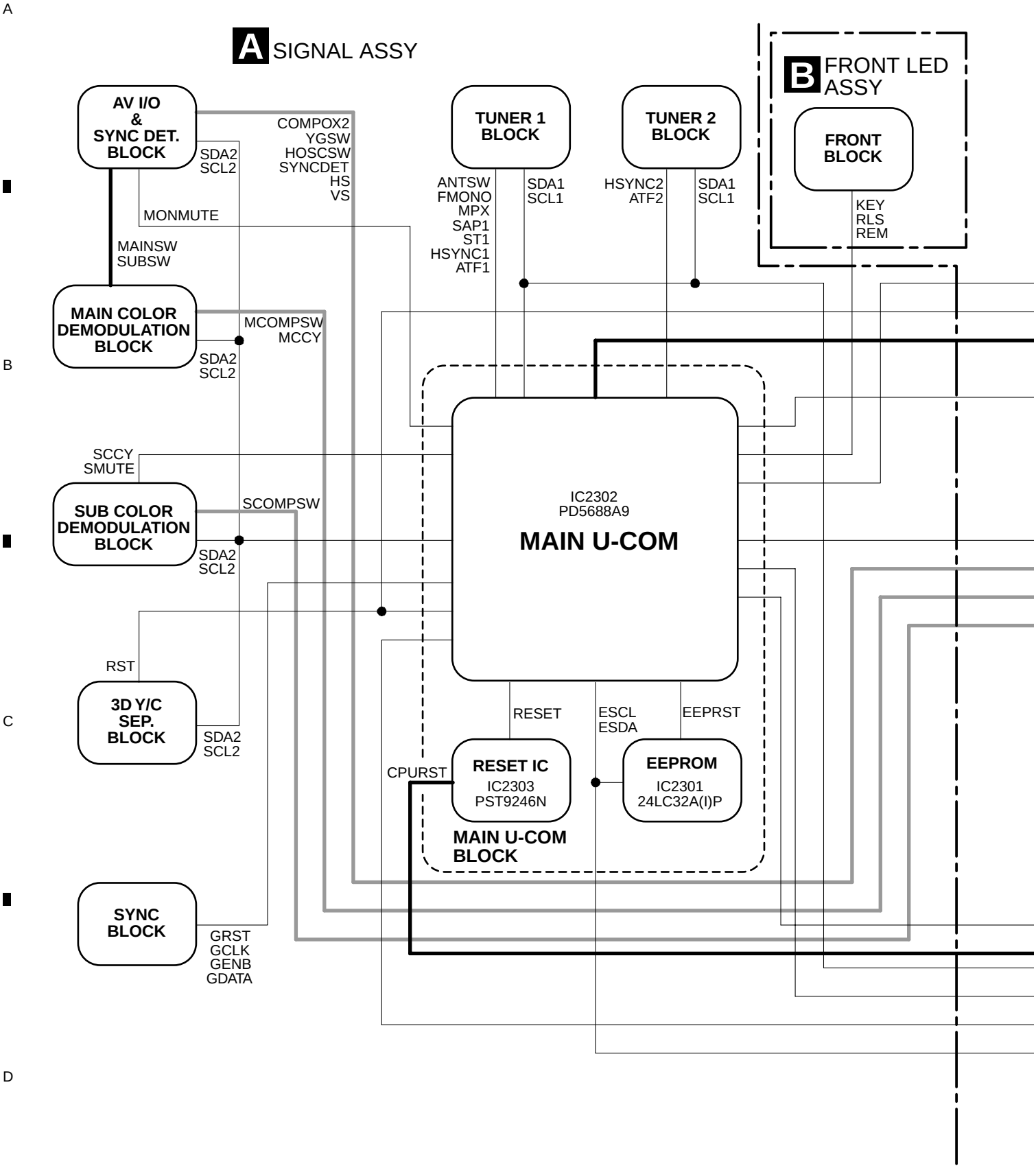

A

F VIDEO IP SERVICE ASSY

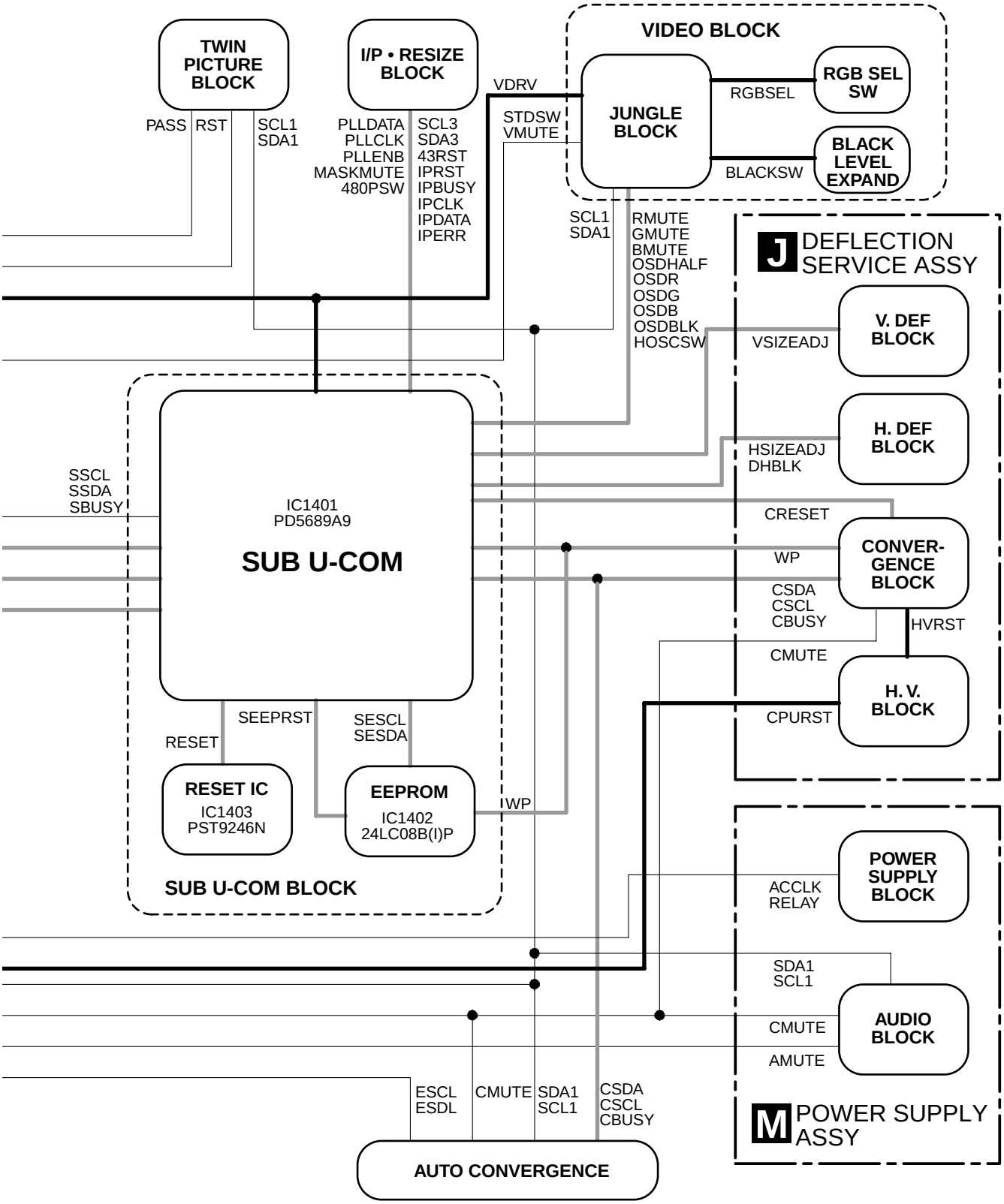

B

C

D

3.1.3 SIGNAL ASSY

● **Assembly Structure**

A SIGNAL ASSY (AWV1891)

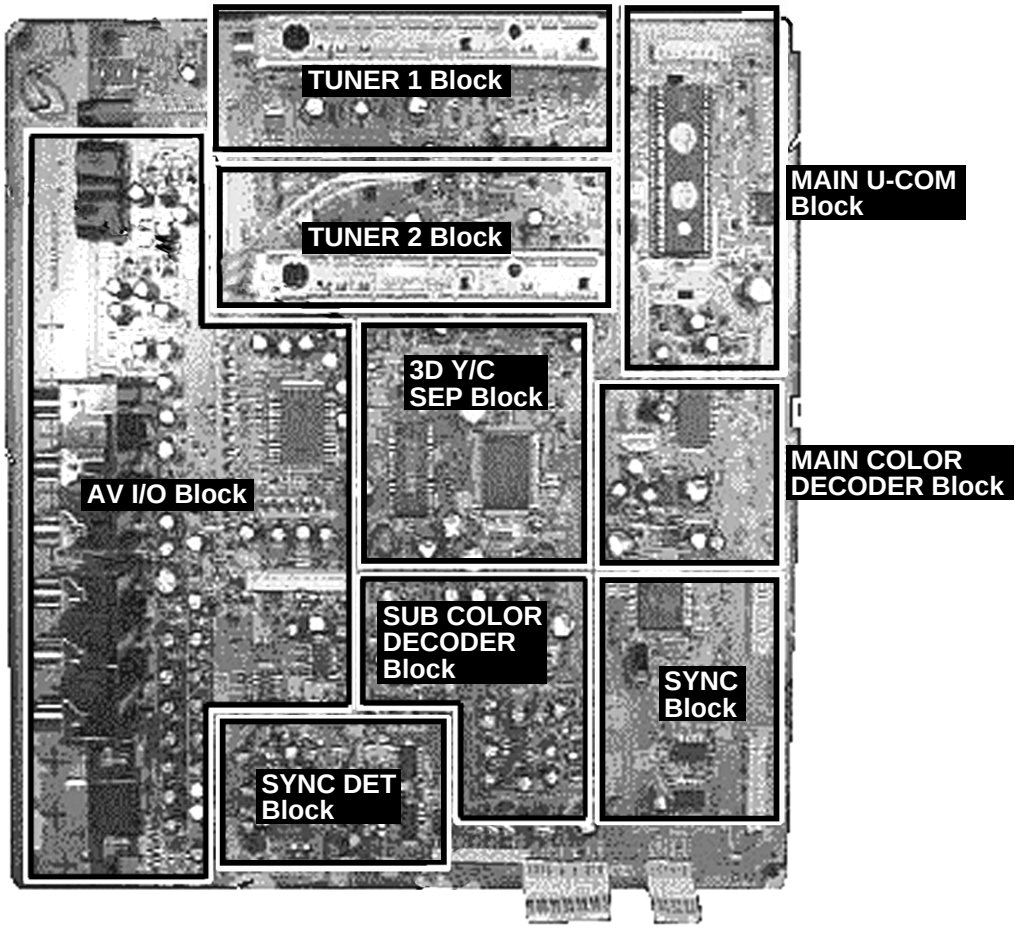

● **Block Diagram**

Refer to "3.1.1 OVERALL BLOCK DIAGRAM".

3.1.4 VIDEO IP SERVICE and DEFLECTION SERVICE ASSYS

● **Assembly Structure**

F VIDEO IP SERVICE ASSY (AWV1910)

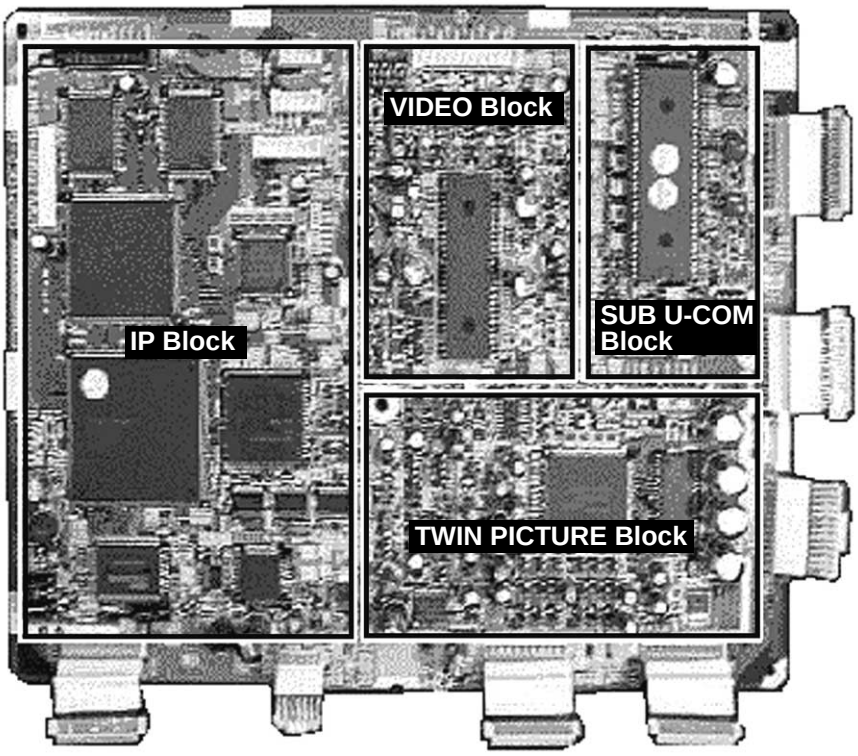

J DEFLECTION SERVICE ASSY (AWV1909)

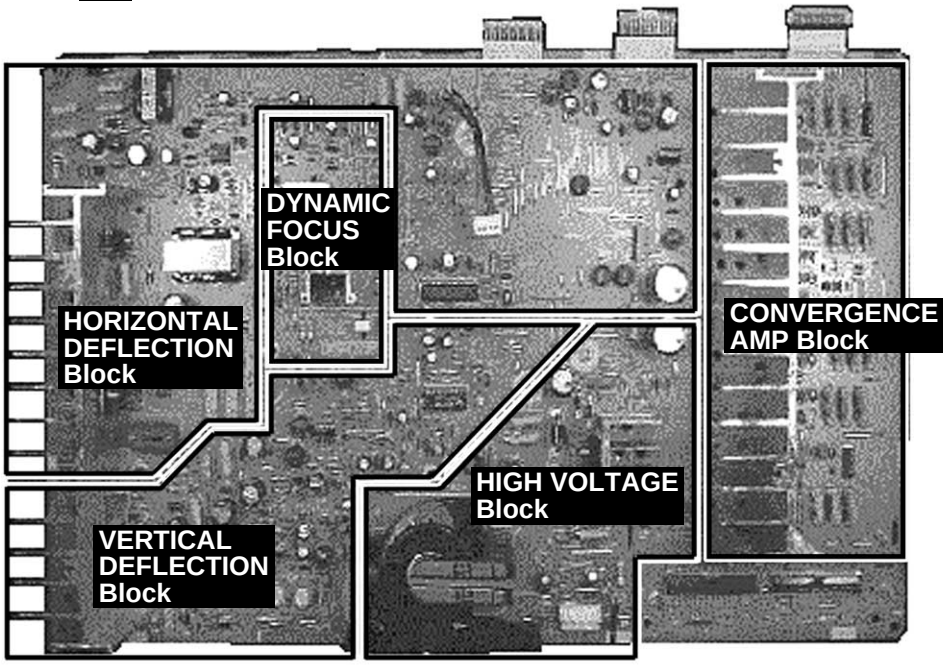

● **Block Diagram**

Refer to "3.1.1 OVERALL BLOCK DIAGRAM".

3.1.6 POWER SUPPLY ASSY

● **Assembly Structure**

M POWER SUPPLY ASSY (AWV1887)

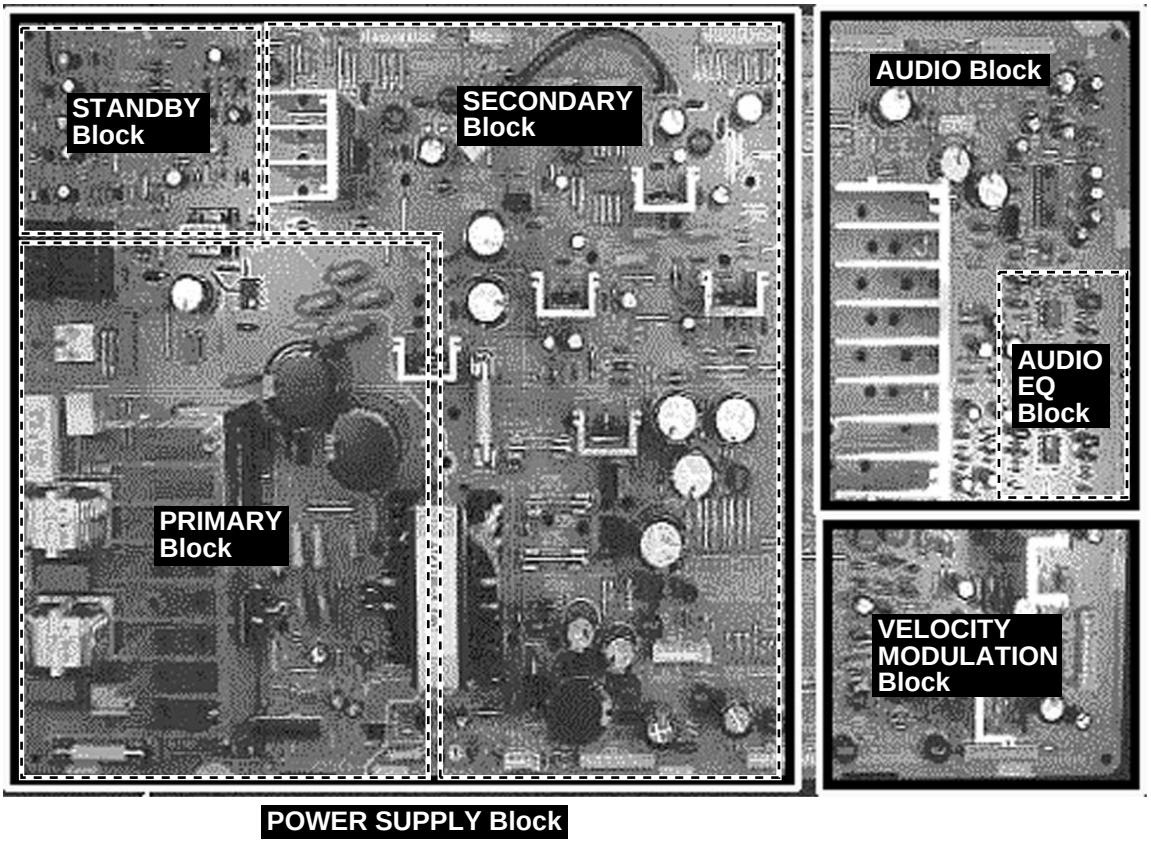

● **AUDIO Block**

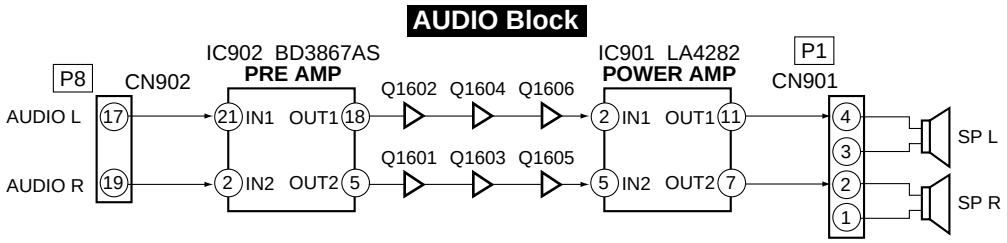

● **VM Block**

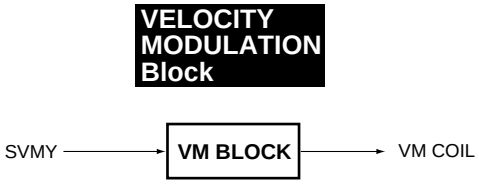

● POWER SUPPLY Block

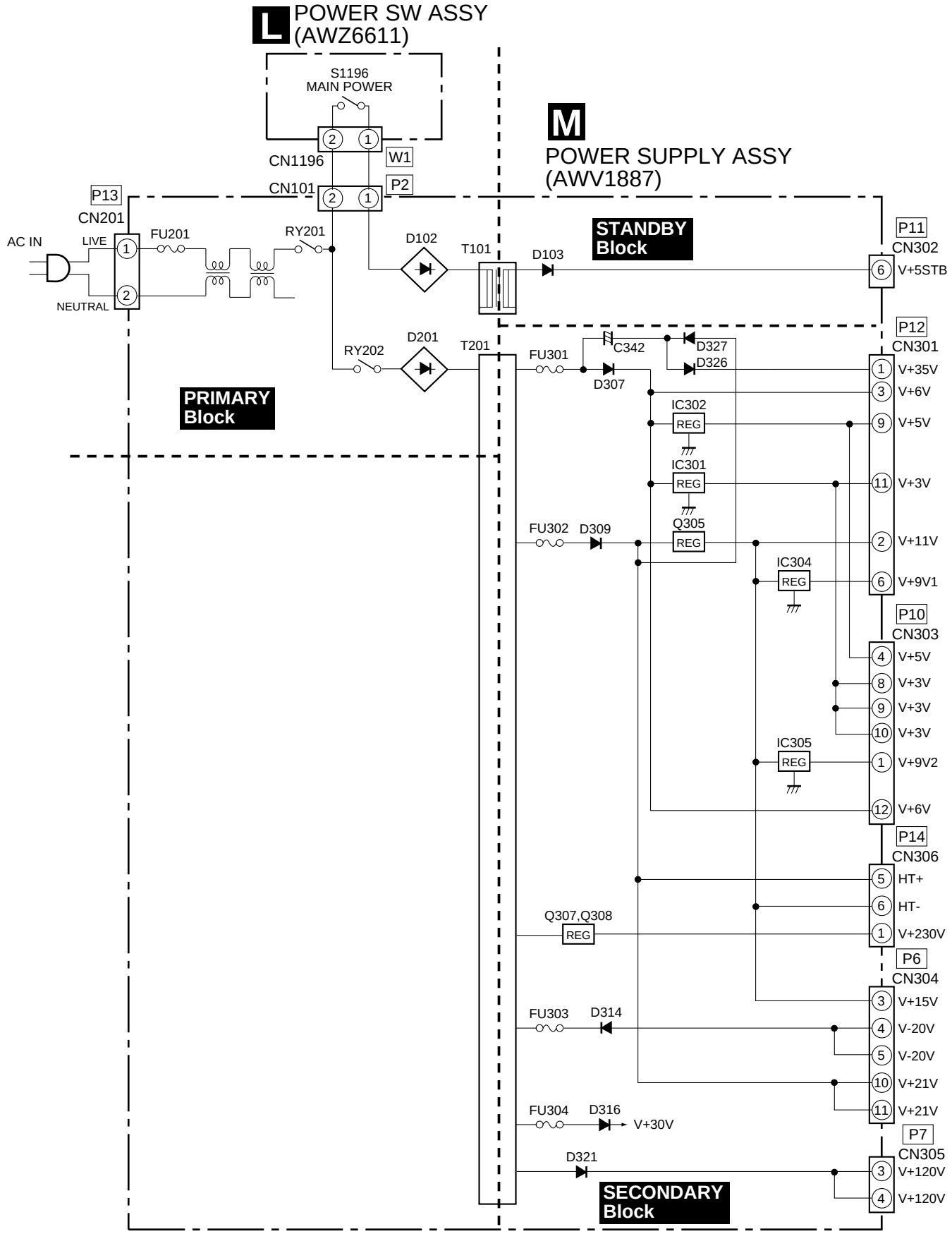

3.2 SHORT ASSY and OVERALL WIRING DIAGRAM

Note : When ordering service parts, be sure to refer to "EXPLODED VIEWS and PARTS LIST" or "PCB PARTS LIST".

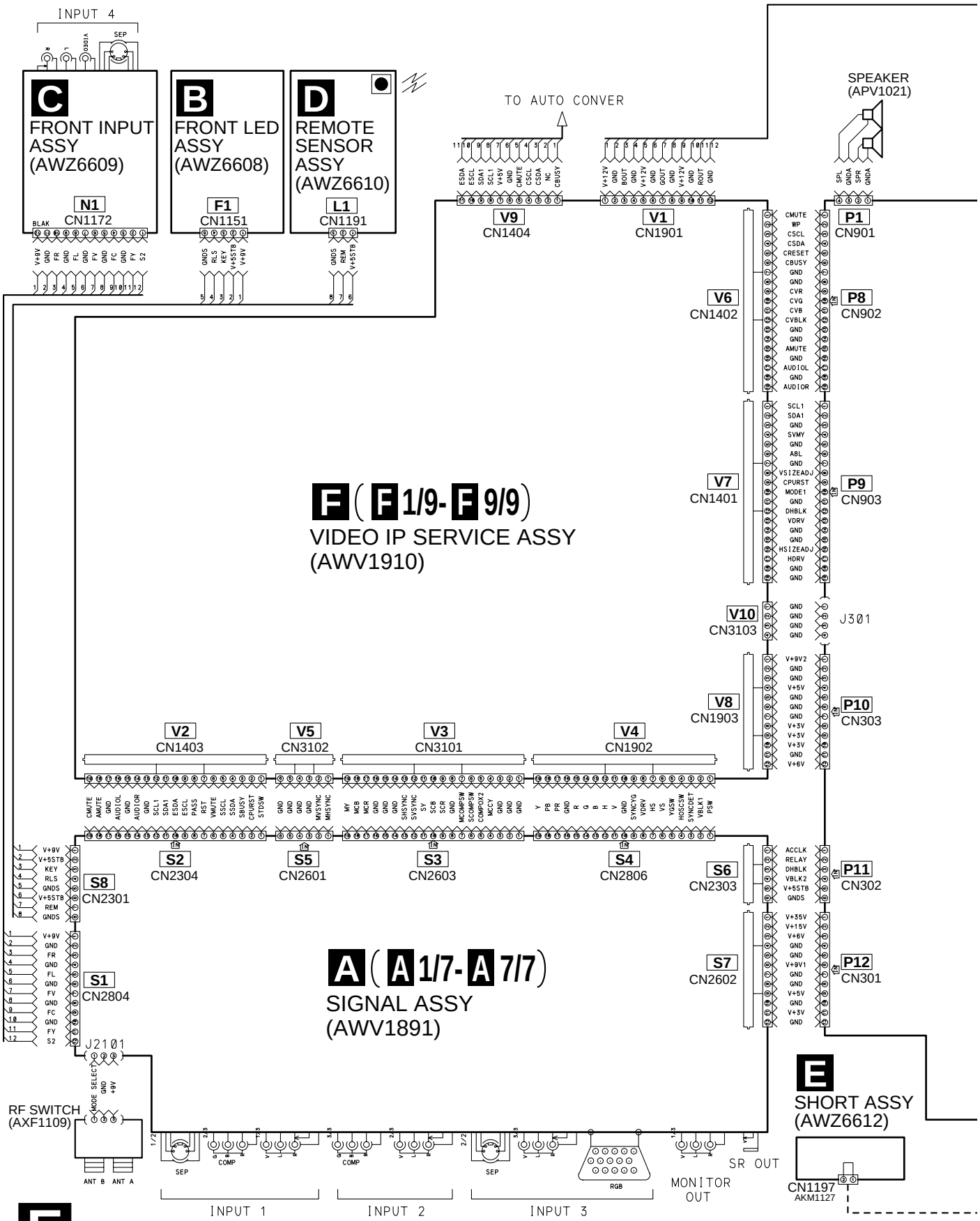

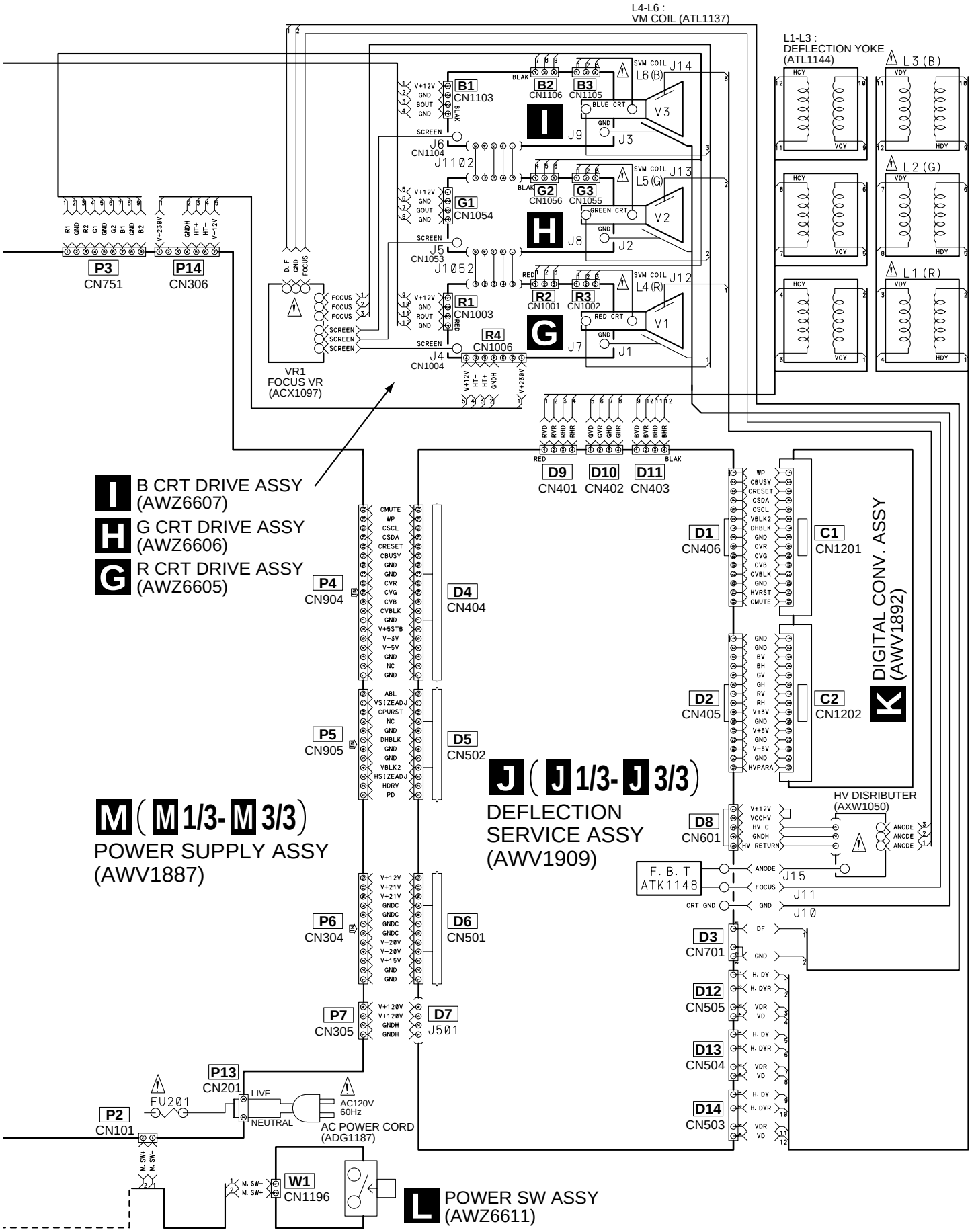
L4-L6 :
VM COIL (ATL1137)
L1-L3 :
DEFLECTION YOKE
(ATL1144)
L3 (B)
L2 (G)
L1 (R)
B1
CN1103
B2
CN1106
B3
CN1105
L6 (B)
J14
V3
J9
J3
J6
CN1104
J1102
G1
CN1054
G2
CN1056
G3
CN1055
L5 (G)
J13
V2
J8
J2
J5
CN1053
J1052
R1
CN1003
R2
CN1001
R3
CN1002
L4 (R)
J12
V1
J7
J1
J4
CN1004
R4
CN1006
P3
CN751
P14
CN306
VR1
FOCUS VR
(ACX1097)
D9
CN401
D10
CN402
D11
CN403
I B CRT DRIVE ASSY
(AWZ6607)
H G CRT DRIVE ASSY
(AWZ6606)
G R CRT DRIVE ASSY
(AWZ6605)
P4
CN904
D4
CN404
P5
CN905
D5
CN502
P6
CN304
D6
CN501
P7
CN305
D7
J501
M (M 1/3- M 3/3)
POWER SUPPLY ASSY
(AWV1887)
J (J 1/3- J 3/3)
DEFLECTION
SERVICE ASSY
(AWV1909)
D1
CN406
C1
CN1201
D2
CN405
C2
CN1202
K DIGITAL CONV. ASSY
(AWV1892)
HV DISRIBUTER
(AXW1050)
D8
CN601
F. B. T
ATK1148
J15
J11
J10
D3
CN701
D12
CN505
D13
CN504
D14
CN503
P13
CN201
FU201
LIVE
NEUTRAL
AC120V
60Hz
AC POWER CORD
(ADG1187)
P2
CN101
W1
CN1196
L POWER SW ASSY
(AWZ6611)

3.3 SIGNAL ASSY (1/7)

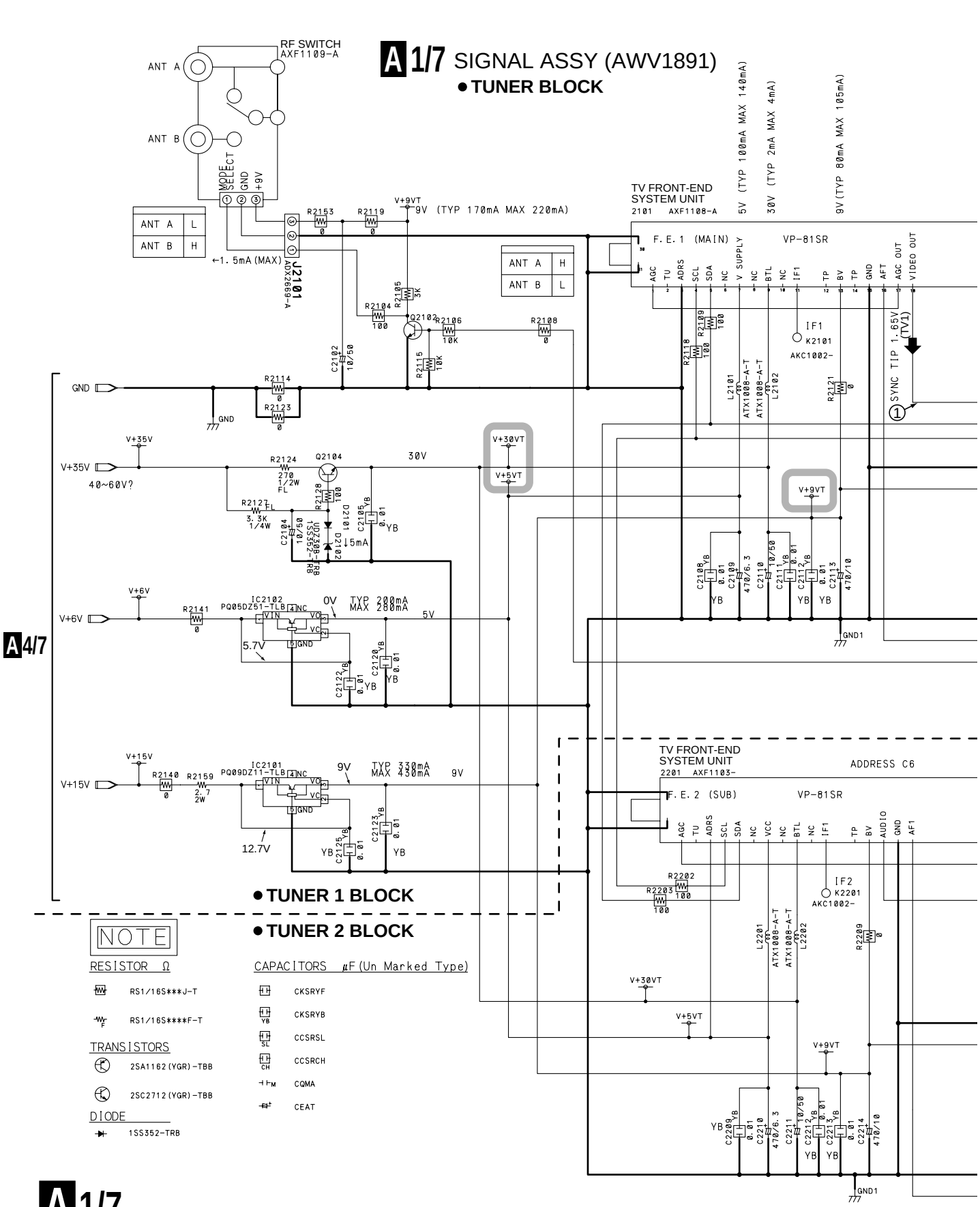

(TV1) : VIDEO SIGNAL ROUTE (TV1)
(TV2) : VIDEO SIGNAL ROUTE (TV2)
(TV1) : AUDIO SIGNAL ROUTE (TV1)

: The power supply is shown with the marked box.

	MPX	FMONO
MONO	L	H
STEREO	L	L
SAP	H	L

	ST	SAP
MONO	H	H
STEREO	L	H
MONO & SAP	H	L
STEREO & SAP	L	L

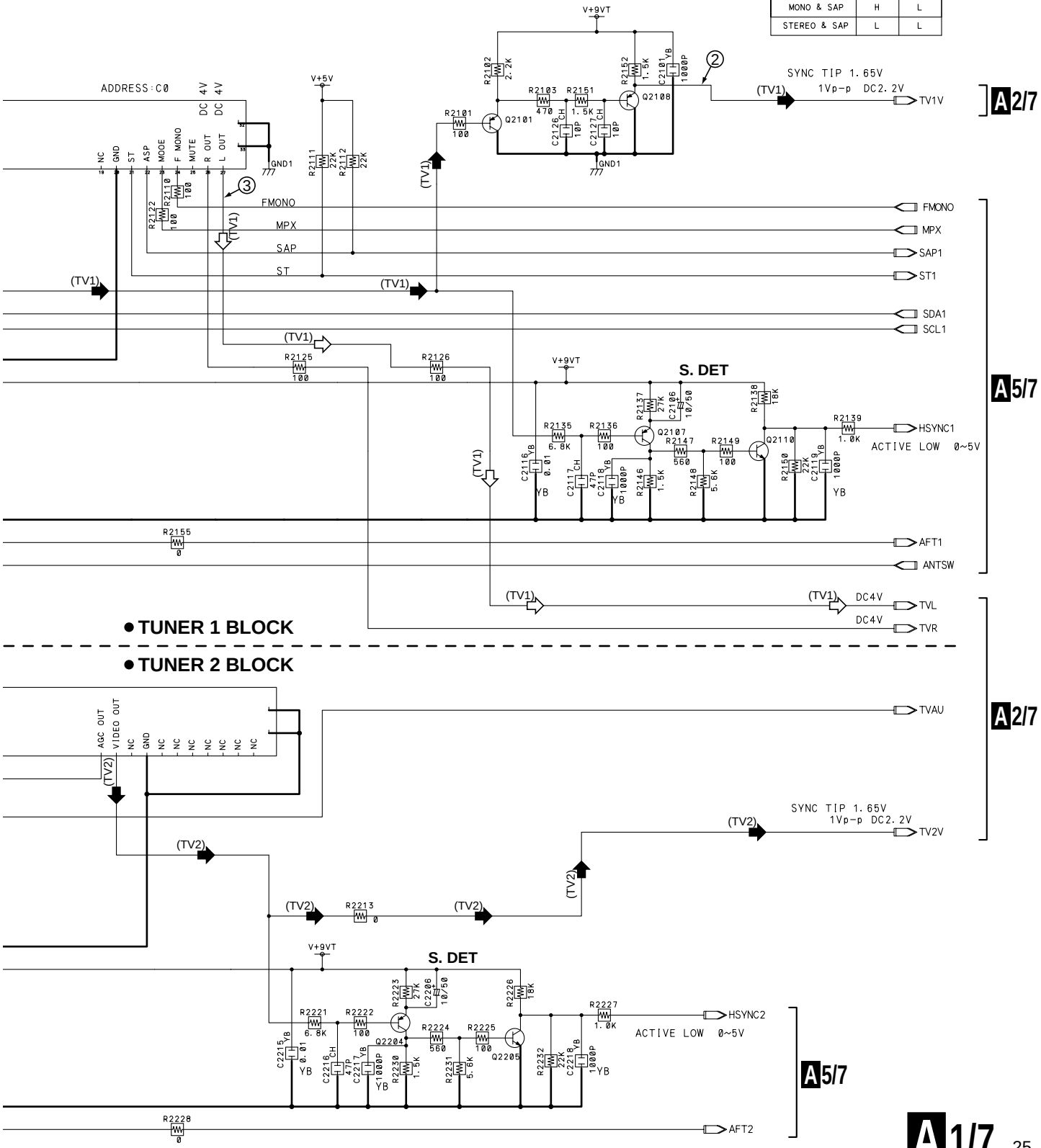

3.4 SIGNAL ASSY (2/7)

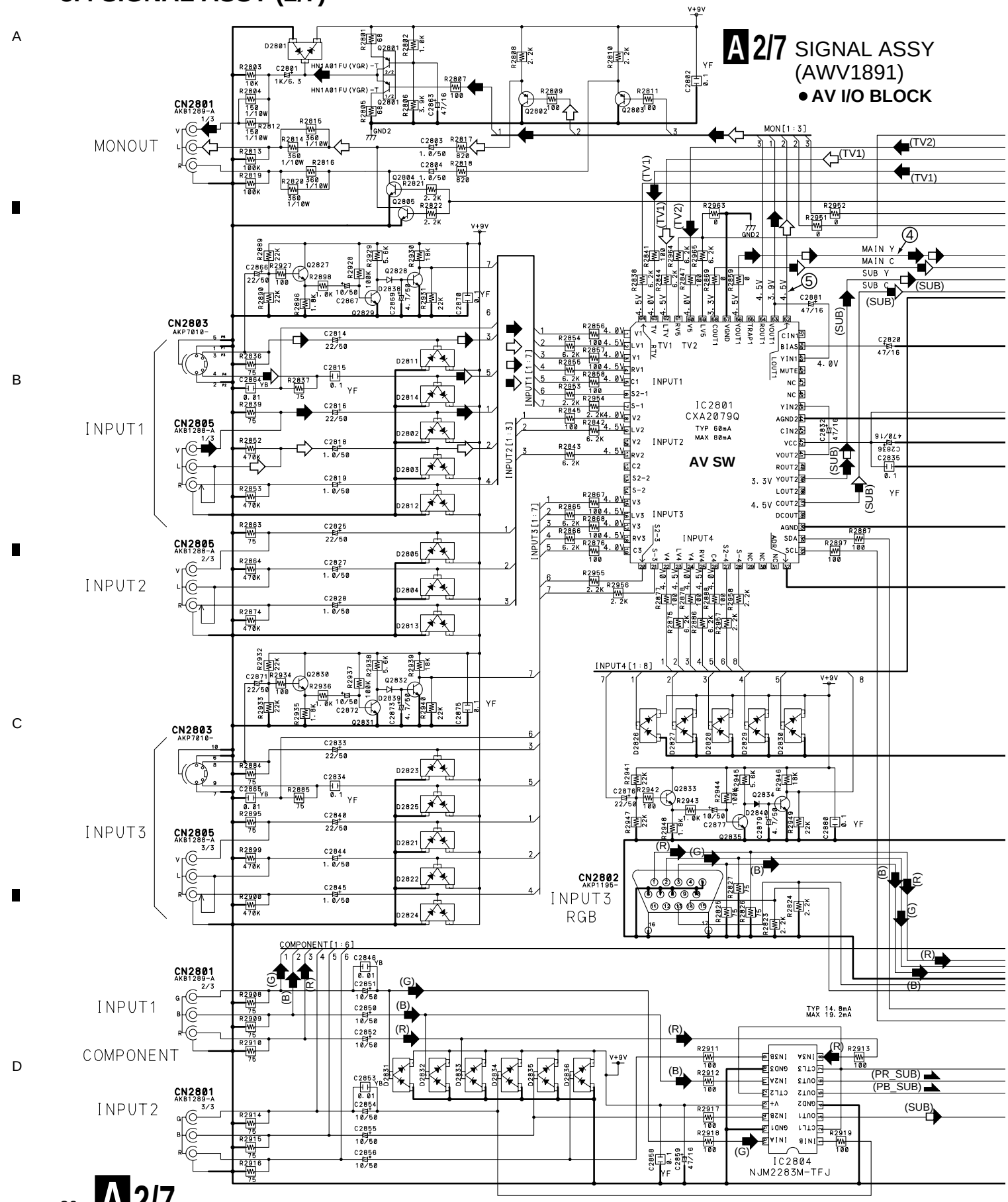

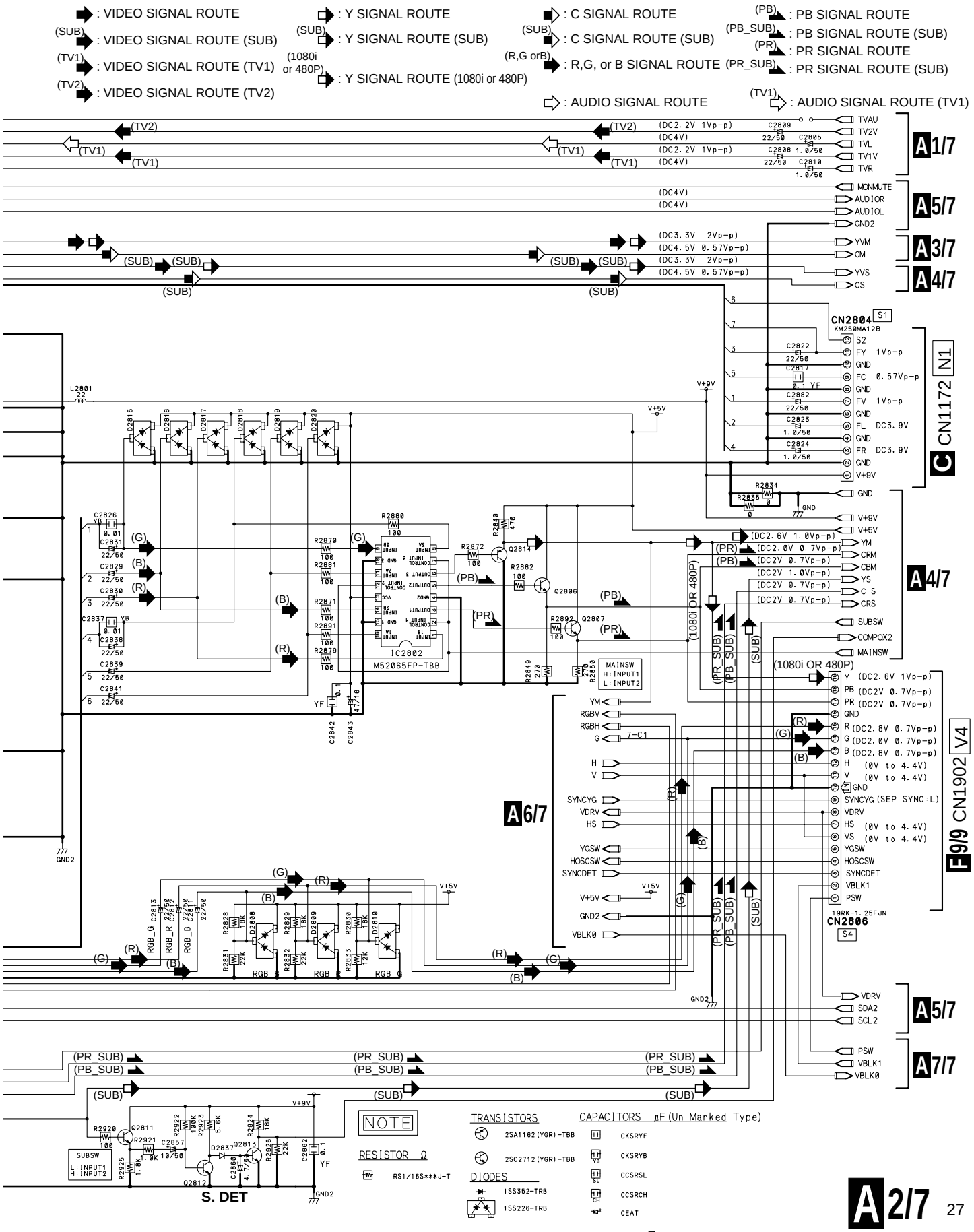
: VIDEO SIGNAL ROUTE
(SUB) : VIDEO SIGNAL ROUTE (SUB)
(TV1) : VIDEO SIGNAL ROUTE (TV1)
(TV2) : VIDEO SIGNAL ROUTE (TV2)
: Y SIGNAL ROUTE
(SUB) : Y SIGNAL ROUTE (SUB)
(1080i or 480P) : Y SIGNAL ROUTE (1080i or 480P)
: C SIGNAL ROUTE
(SUB) : C SIGNAL ROUTE (SUB)
(R,G orB) : R,G, or B SIGNAL ROUTE
: AUDIO SIGNAL ROUTE
(PB) : PB SIGNAL ROUTE
(PB_SUB) : PB SIGNAL ROUTE (SUB)
(PR) : PR SIGNAL ROUTE
(PR_SUB) : PR SIGNAL ROUTE (SUB)
(TV1) : AUDIO SIGNAL ROUTE (TV1)
TVAU
TV2V
TVL
TV1V
TVR
A1/7
MONMUTE
AUDIOR
AUDIOL
GND2
A5/7
YVM
CM
A3/7
YVS
CS
A4/7
CN2804
KM250MA12B
S2
FY 1Vp-p
GND
FC 0.57Vp-p
FV 1Vp-p
FL DC3.9V
FR DC3.9V
V+9V
C CN1172 N1
IC2802
M52065FP-TBB
MAINSW
H: INPUT1
L: INPUT2
SUBSW
COMPOX2
MAINSW
A6/7
CN2806
19RK-1.25FJN
F9/9 CN1902 V4
VDRV
SDA2
SCL2
A5/7
PSW
VBLK1
VBLK0
A7/7
S. DET
SUBSW
L: INPUT1
H: INPUT2
NOTE
RESISTOR Ω
RS1/16S***J-T
TRANSISTORS
2SA1162(YGR)-TBB
2SC2712(YGR)-TBB
DIODES
1SS352-TRB
1SS226-TRB
CAPACITORS μF(Un Marked Type)
CKSRYF
CKSRYB
CCSRSL
CCSRCH
CEAT
A2/7

3.5 SIGNAL ASSY (3/7)

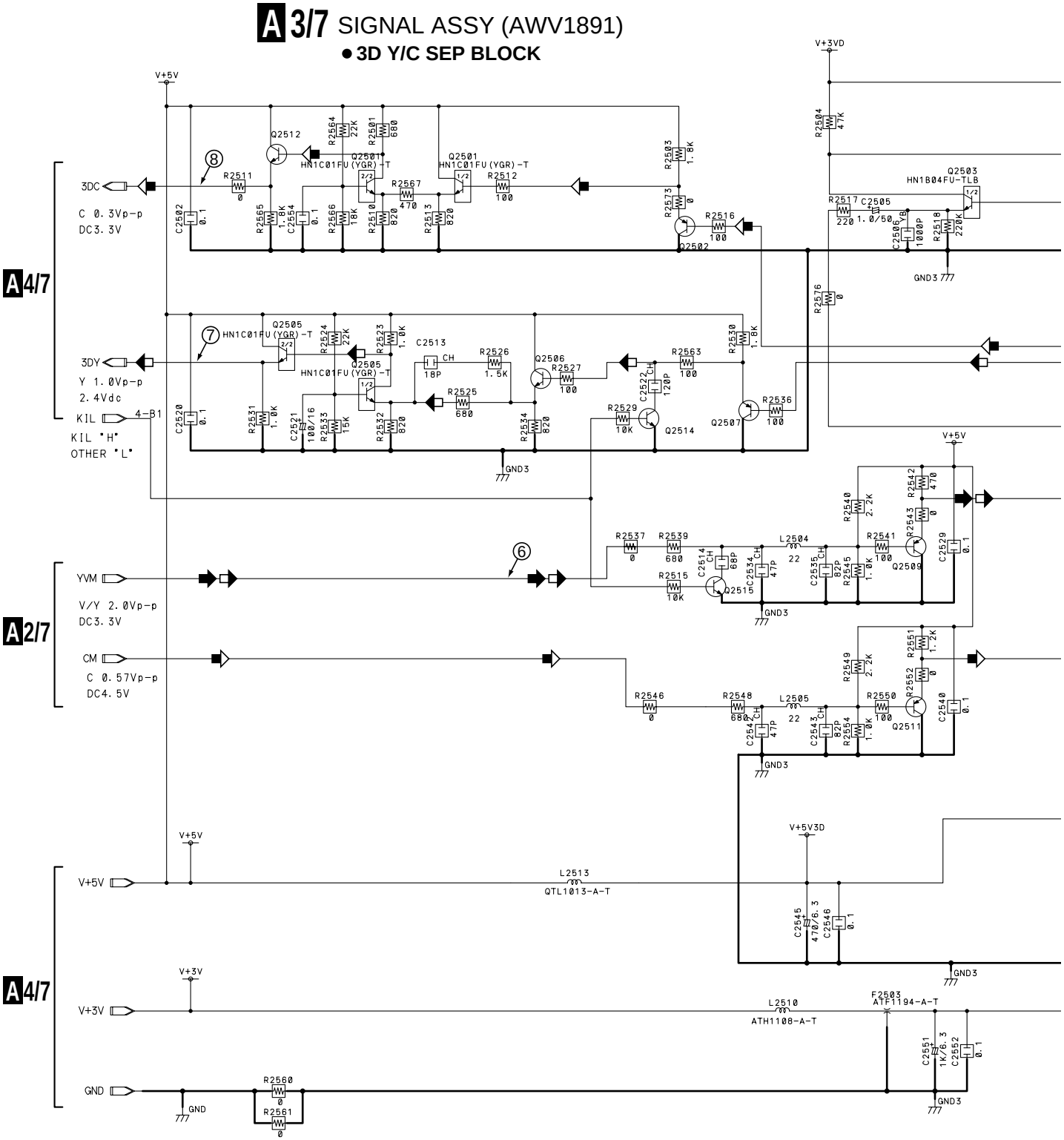

: VIDEO SIGNAL ROUTE
: Y SIGNAL ROUTE
: C SIGNAL ROUTE

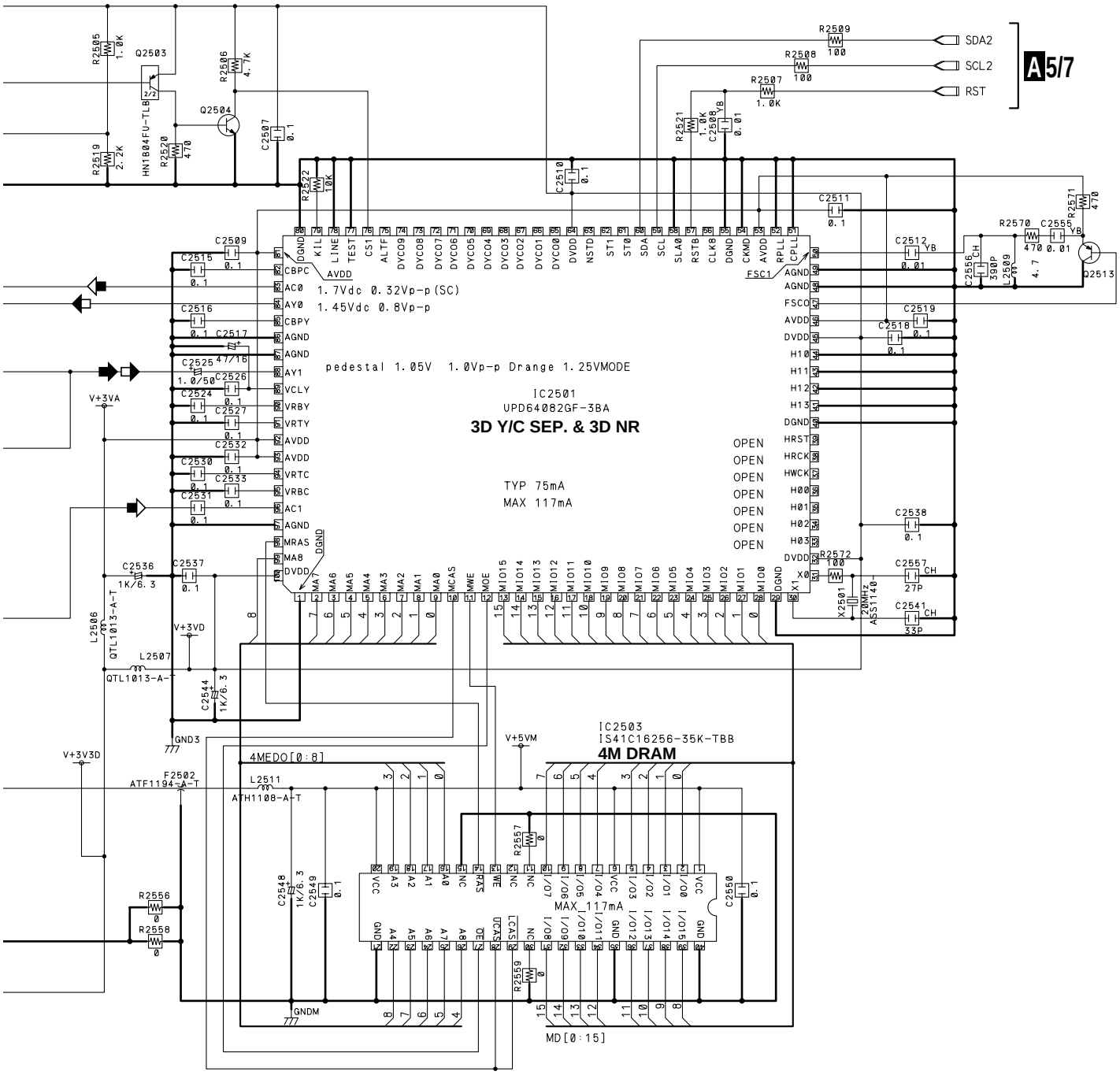

NOTE

RESISTOR Ω

RS1/16S***J-T

RS1/16S****F-T

TRANSISTORS

2SA1162(YGR)-TBB

2SC2712(YGR)-TBB

CAPACITORS μF(Un Marked Type)

CKSRYF

CKSRYB

CCSRSL

CCSRCH

CQMA

CEAT

INDUCTORS μH

LFEA

A3/7

3.6 SIGNAL ASSY (4/7)

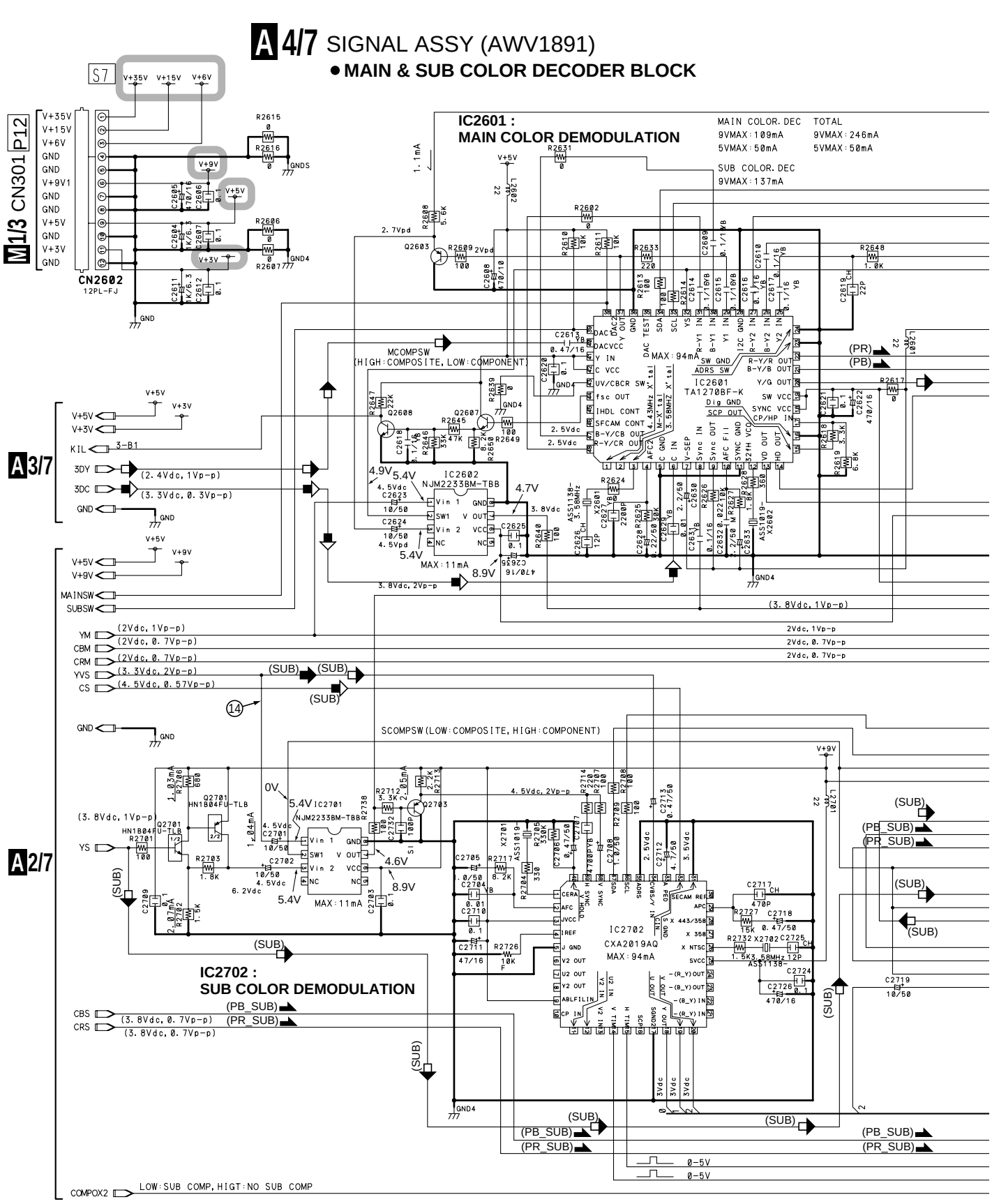

(SUB) : VIDEO SIGNAL ROUTE (SUB)
: Y SIGNAL ROUTE
(SUB) : Y SIGNAL ROUTE (SUB)
: C SIGNAL ROUTE
(SUB) : C SIGNAL ROUTE (SUB)

(PB) : PB SIGNAL ROUTE
(PB_SUB) : PB SIGNAL ROUTE (SUB)
(PR) : PR SIGNAL ROUTE
(PR_SUB) : PR SIGNAL ROUTE (SUB)

: The power supply is shown with the marked box.

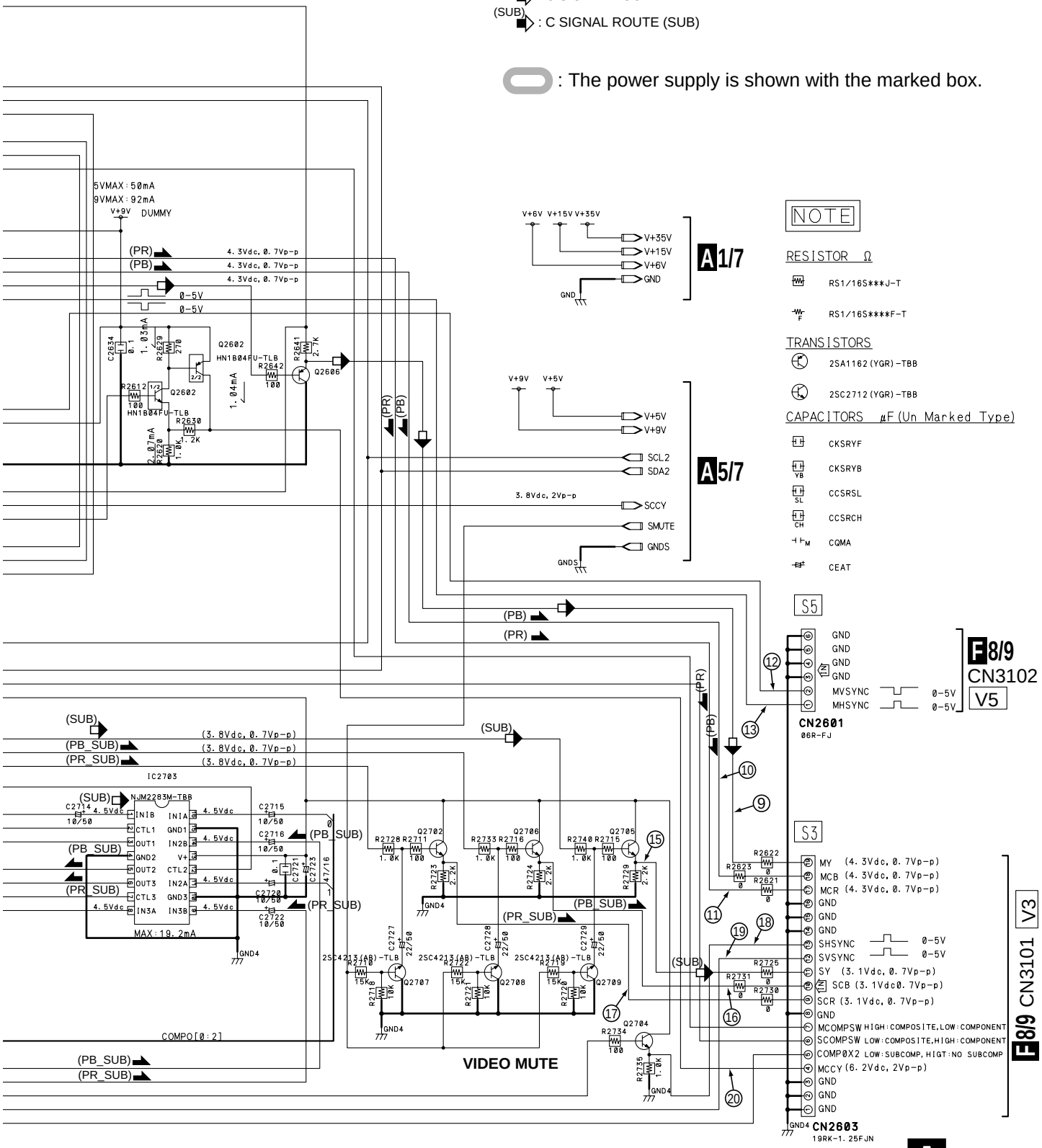

3.7 SIGNAL ASSY (5/7)

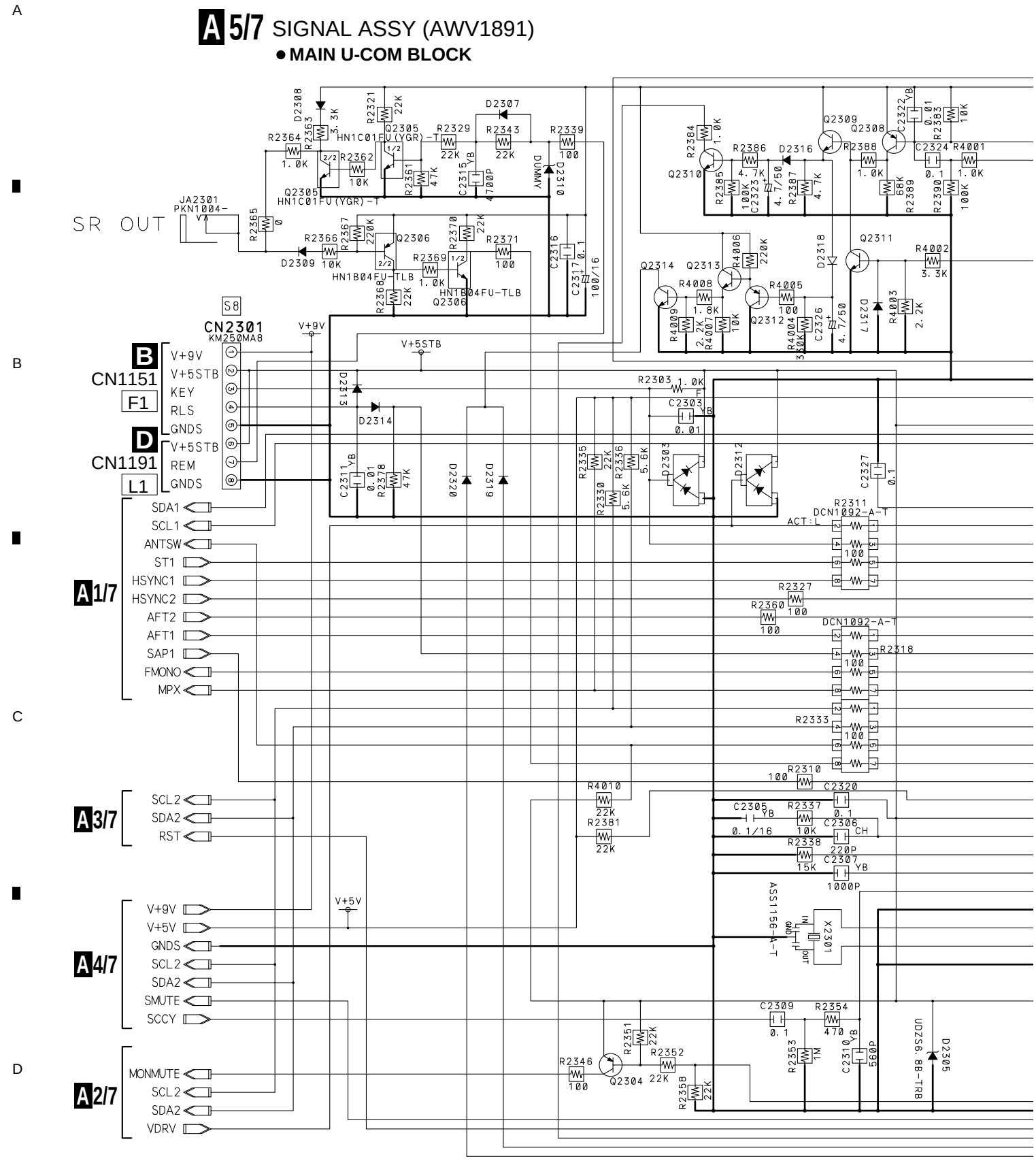

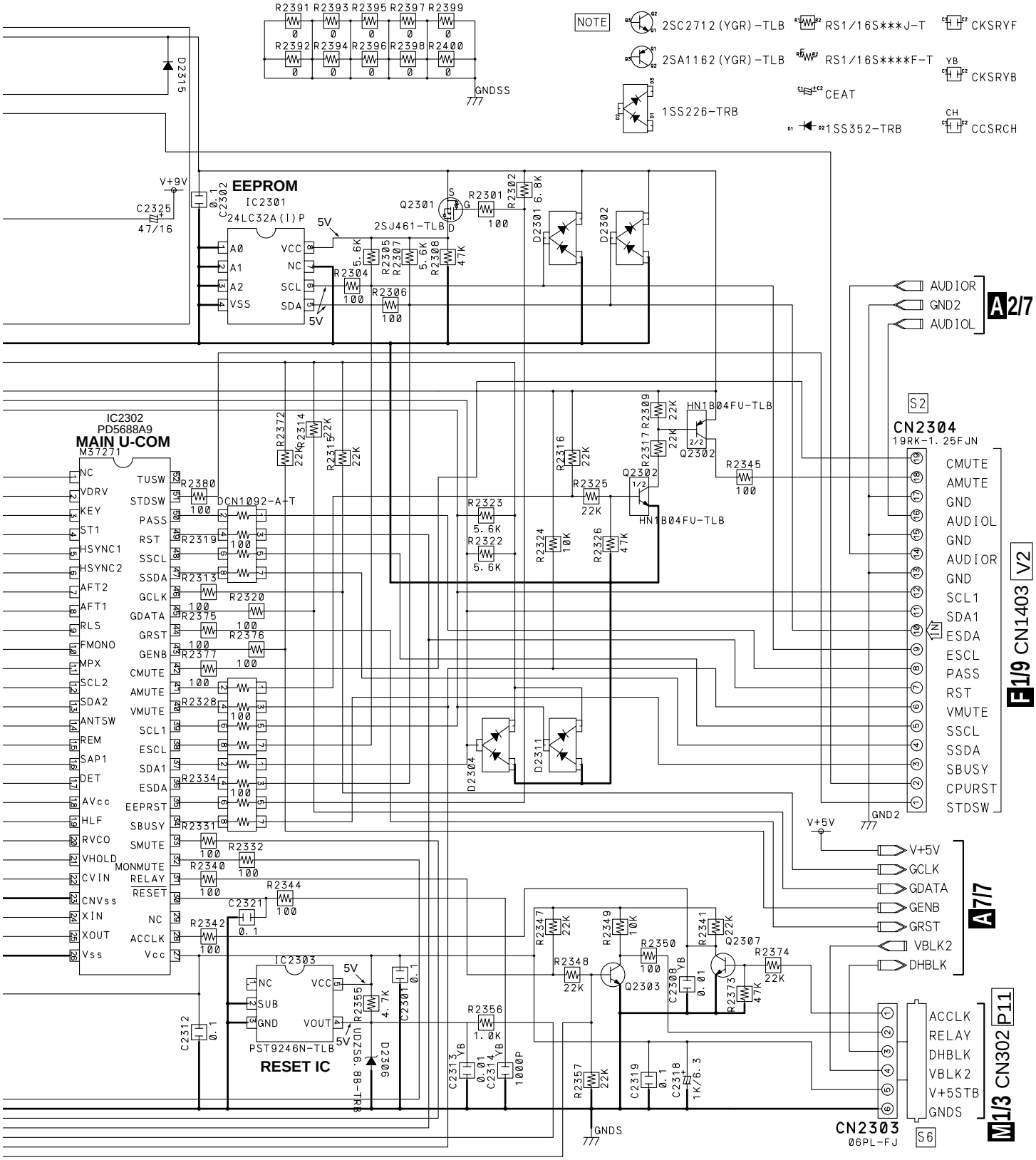
NOTE
2SC2712(YGR)-TLB
RS1/16S***J-T
CKSRYF
2SA1162(YGR)-TLB
RS1/16S****F-T
CKSRYB
CEAT
1SS226-TRB
1SS352-TRB
CCSRCH
EEPROM
IC2301
24LC32A(I)P
MAIN U-COM
IC2302
PD5688A9
M37271
RESET IC
IC2303
PST9246N-TLB
CN2304
19RK-1.25FJN
CN2303
06PL-FJ
CN1403
CN302
AUDIOR
GND2
AUDIOL
V+5V
GCLK
GDATA
GENB
GRST
VBLK2
DHBLK
ACCLK
RELAY
DHBLK
VBLK2
V+5STB
GNDS
GNDSS
V+9V
5V

3.8 SIGNAL ASSY (6/7)

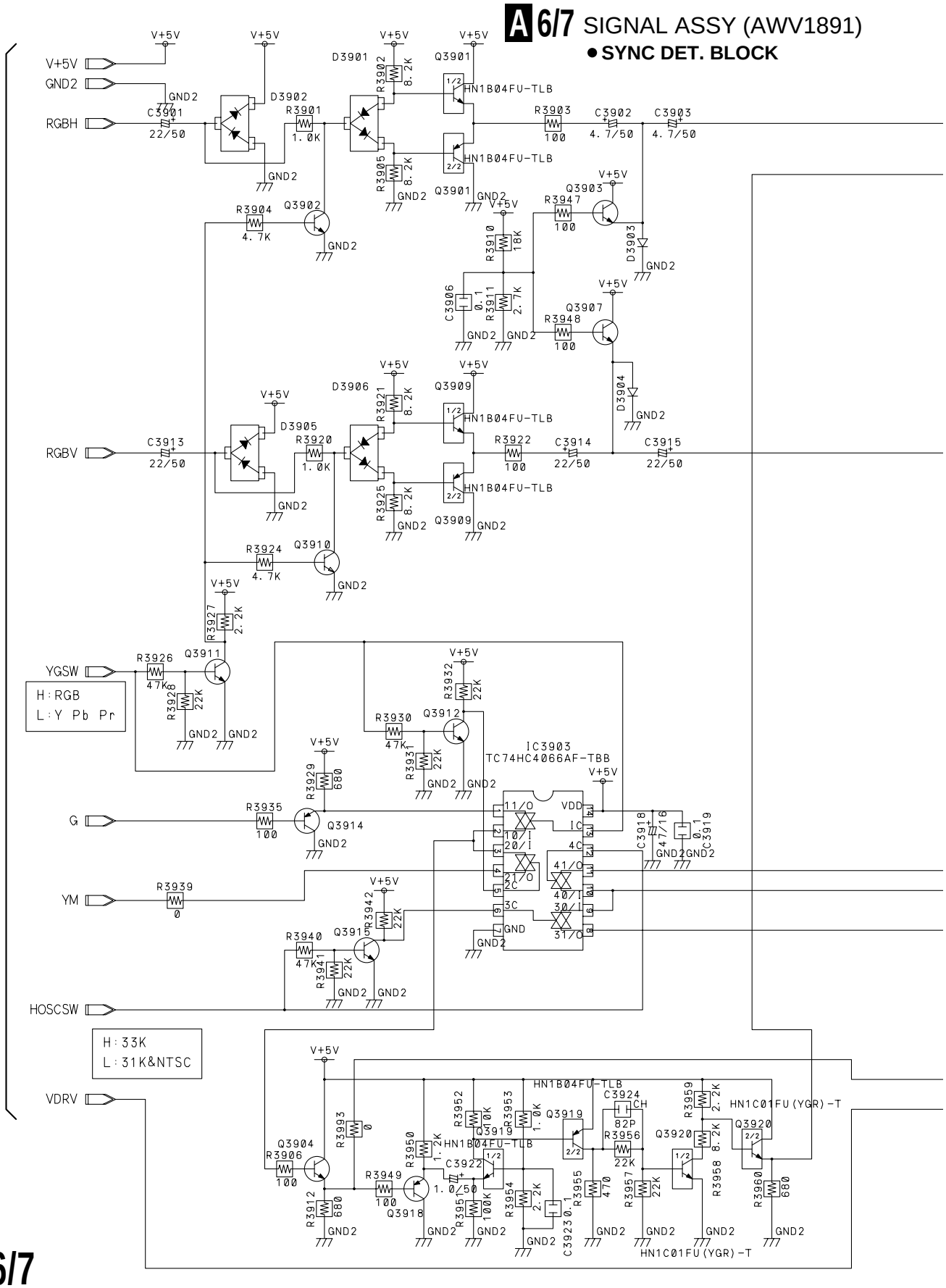

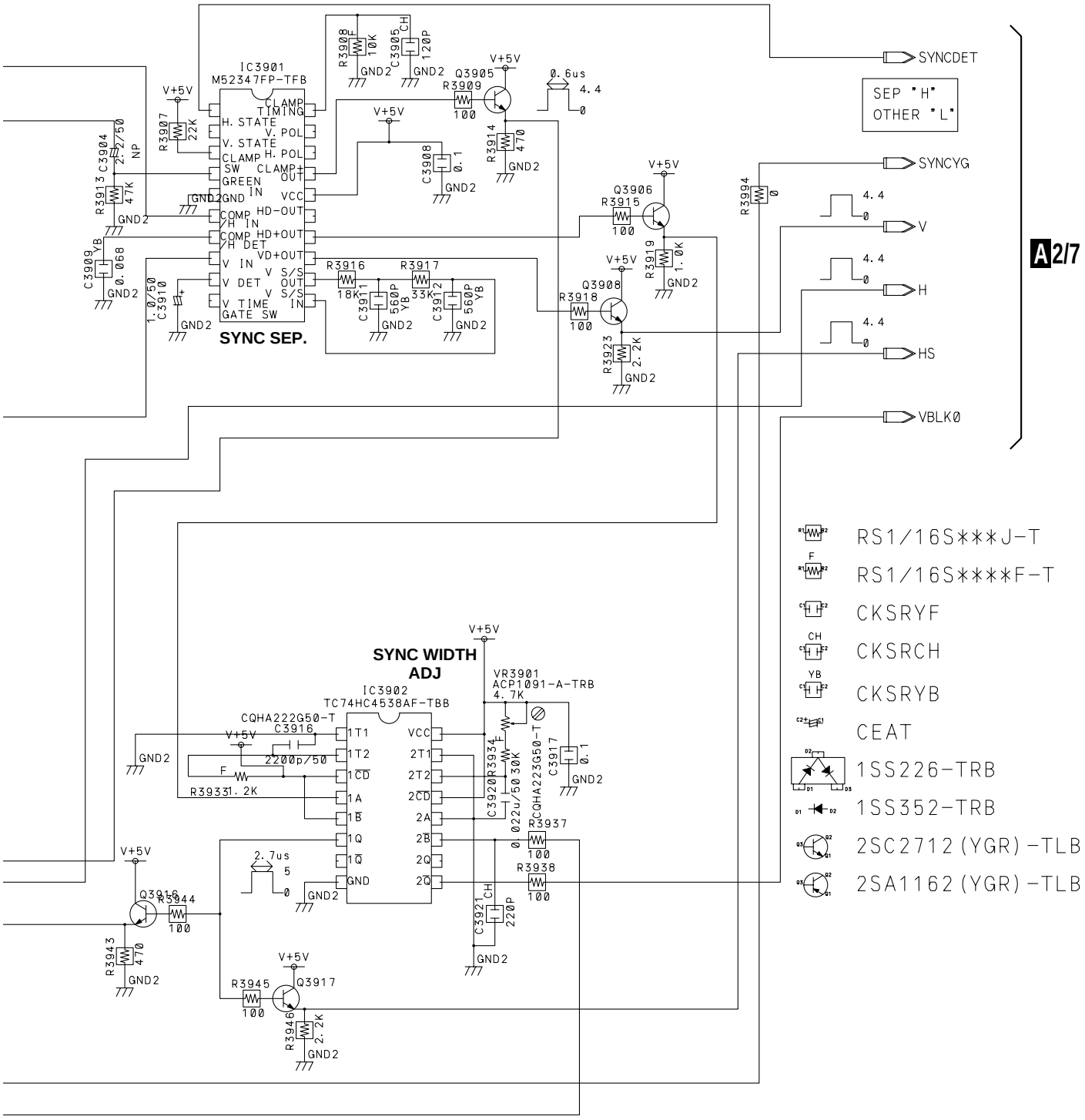
IC3901
M52347FP-TFB
SYNC SEP.
SYNC WIDTH ADJ
IC3902
TC74HC4538AF-TBB
VR3901
ACP1091-A-TRB
SYNCDET
SEP "H"
OTHER "L"
SYNCYG
V
H
HS
VBLK0
A2/7
RS1/16S***J-T
RS1/16S****F-T
CKSRYF
CKSRCH
CKSRYB
CEAT
1SS226-TRB
1SS352-TRB
2SC2712(YGR)-TLB
2SA1162(YGR)-TLB

3.9 SIGNAL ASSY (7/7)

A 7/7 SIGNAL ASSY (AWV1891)

● **SYNC BLOCK**

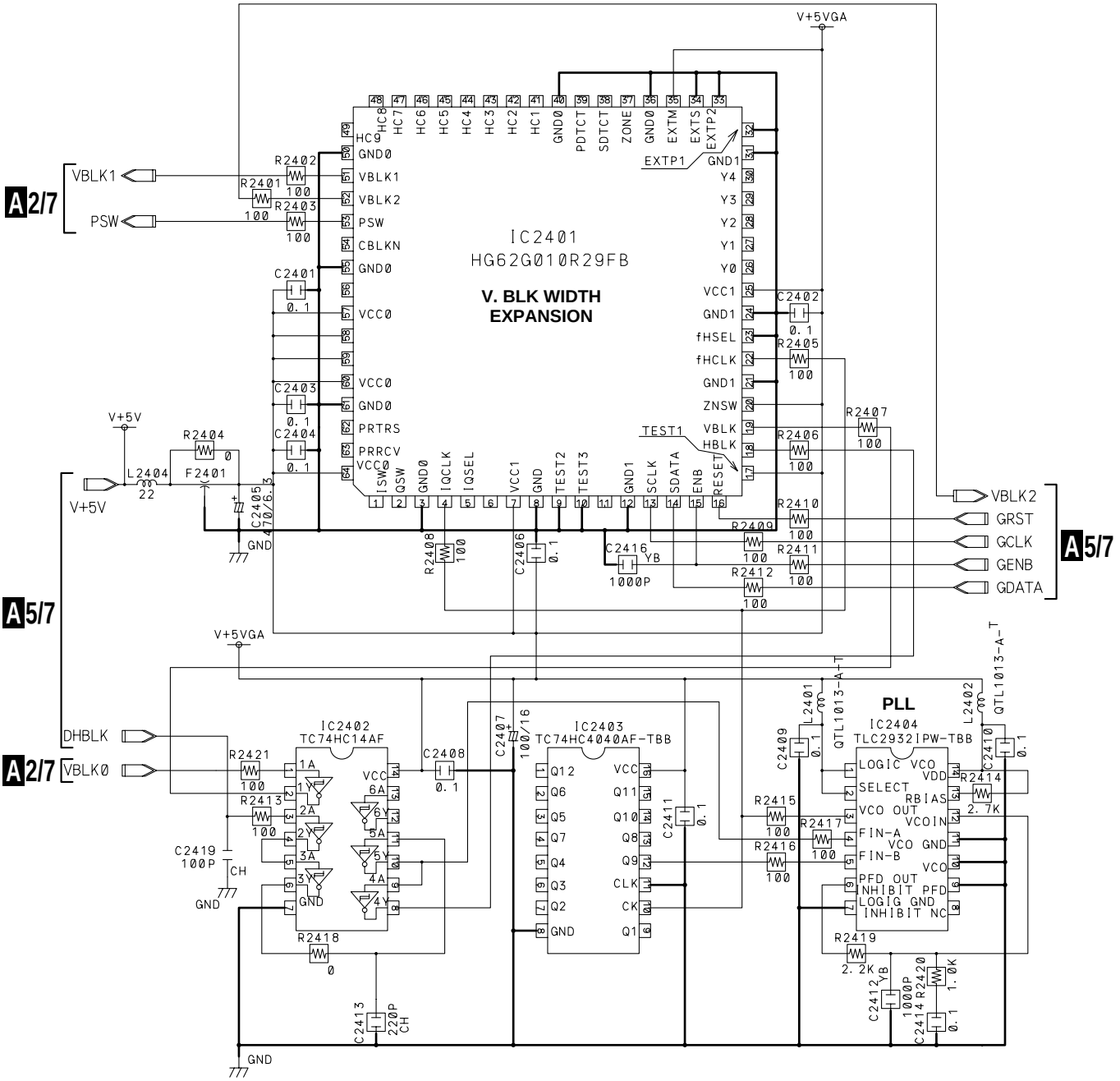

RESISTOR Ω

CAPACITORS μF (Un Marked Type)

NOTE

RS1/16S***J-T

CKSRYF

CCSRCH

CKSRYB

CEAT

3.10 FRONT LED, FRONT INPUT and REMOTE SENSOR ASSYS

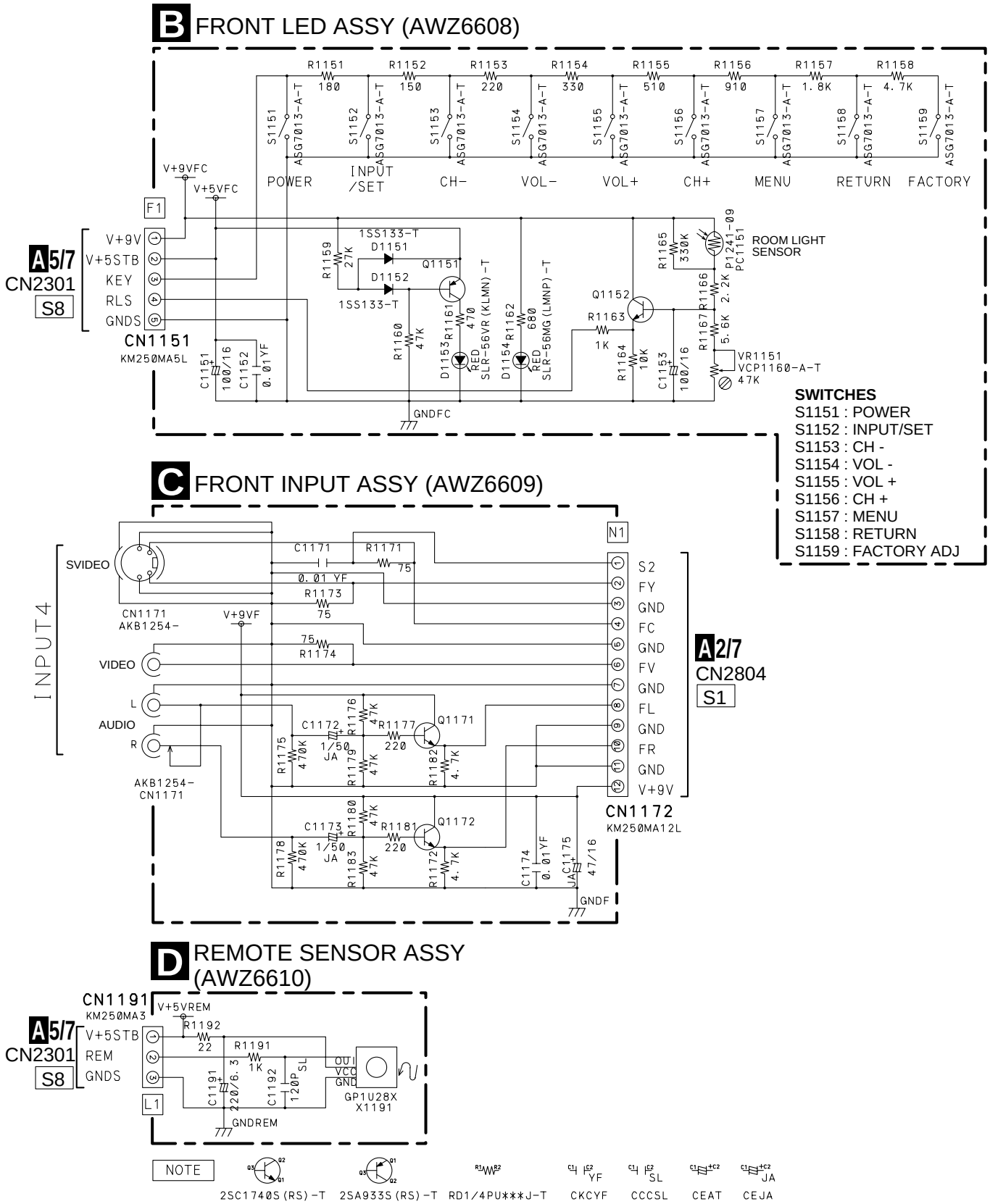

3.11 VIDEO IP SERVICE ASSY (1/9)

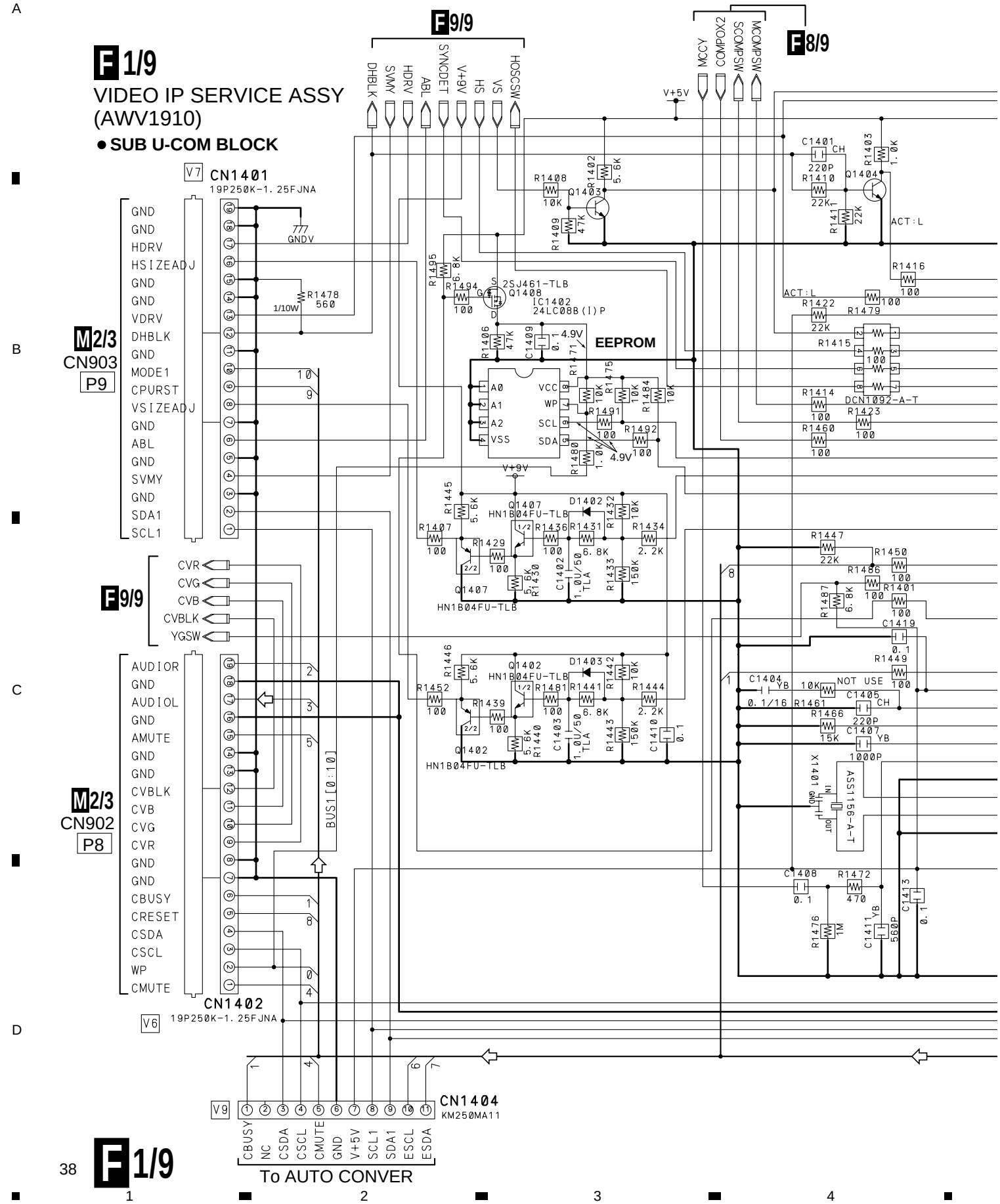

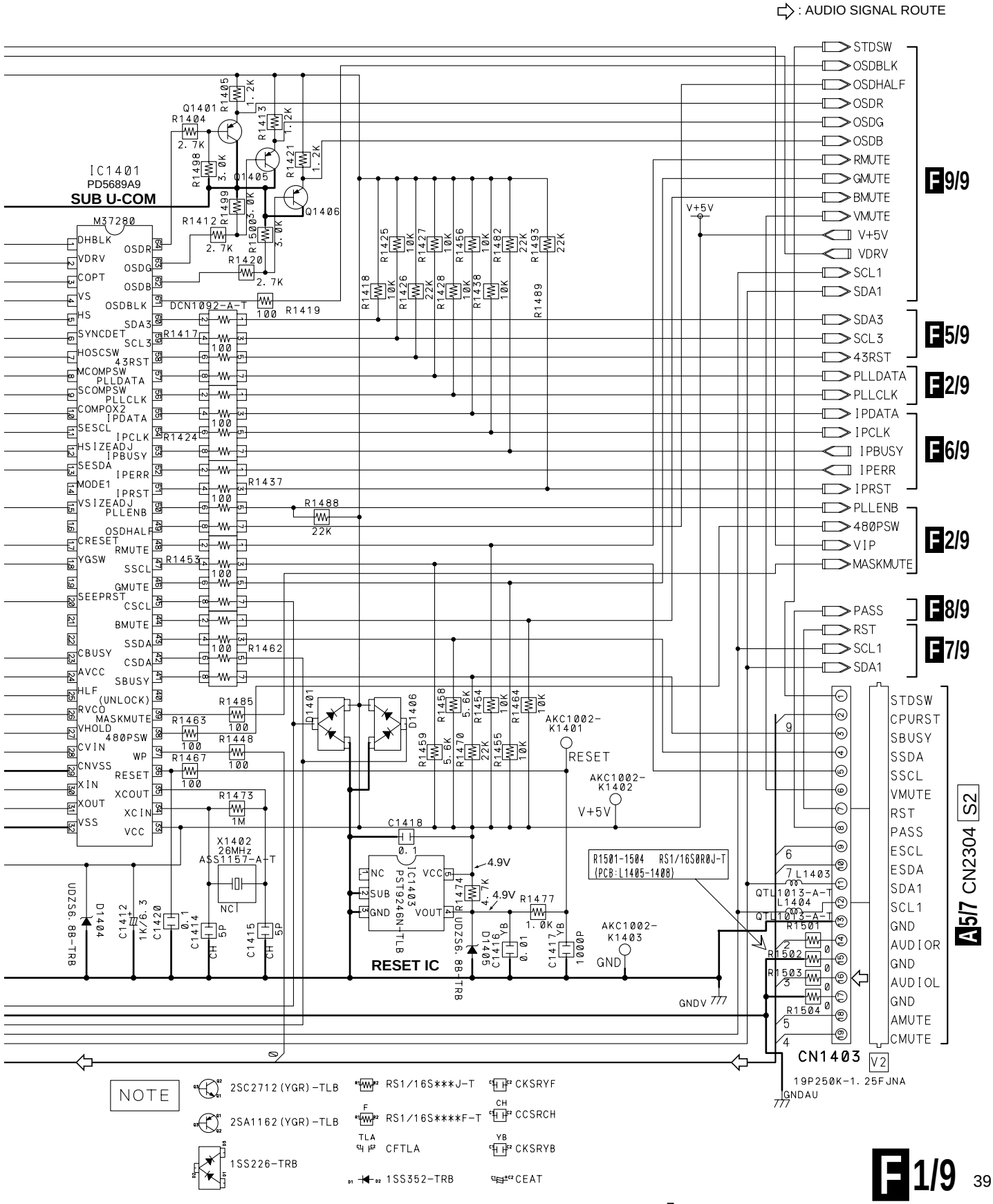
: AUDIO SIGNAL ROUTE
IC1401
PD5689A9
SUB U-COM
M37280
DCN1092-A-T
STDSW
OSDBLK
OSDHALF
OSDR
OSDG
OSDB
RMUTE
GMUTE
BMUTE
VMUTE
V+5V
VDRV
SCL1
SDA1
F 9/9
SDA3
SCL3
43RST
F 5/9
PLLDATA
PLLCLK
F 2/9
IPDATA
IPCLK
IPBUSY
IPERR
IPRST
F 6/9
PLLENB
480PSW
VIP
MASKMUTE
F 2/9
PASS
RST
SCL1
SDA1
F 8/9
F 7/9
CPURST
SBUSY
SSDA
SSCL
VMUTE
RST
PASS
ESCL
ESDA
SDA1
SCL1
GND
AUDIOR
GND
AUDIOL
GND
AMUTE
CMUTE
A 5/7 CN2304 S2
CN1403 V2
19P250K-1.25FJNA
GNDAU
AKC1002-K1401
RESET
AKC1002-K1402
V+5V
AKC1002-K1403
GND
GNDV
R1501-1504 RS1/16S0R0J-T
(PCB:L1405-1408)
RESET IC
PST9246N-TLB
X1402
26MHz
ASS1157-A-T
NOTE
2SC2712(YGR)-TLB
2SA1162(YGR)-TLB
1SS226-TRB
RS1/16S***J-T
RS1/16S****F-T
CFTLA
1SS352-TRB
CKSRYF
CCSRCH
CKSRYB
CEAT

F 1/9

3.12 VIDEO IP SERVICE ASSY (2/9)

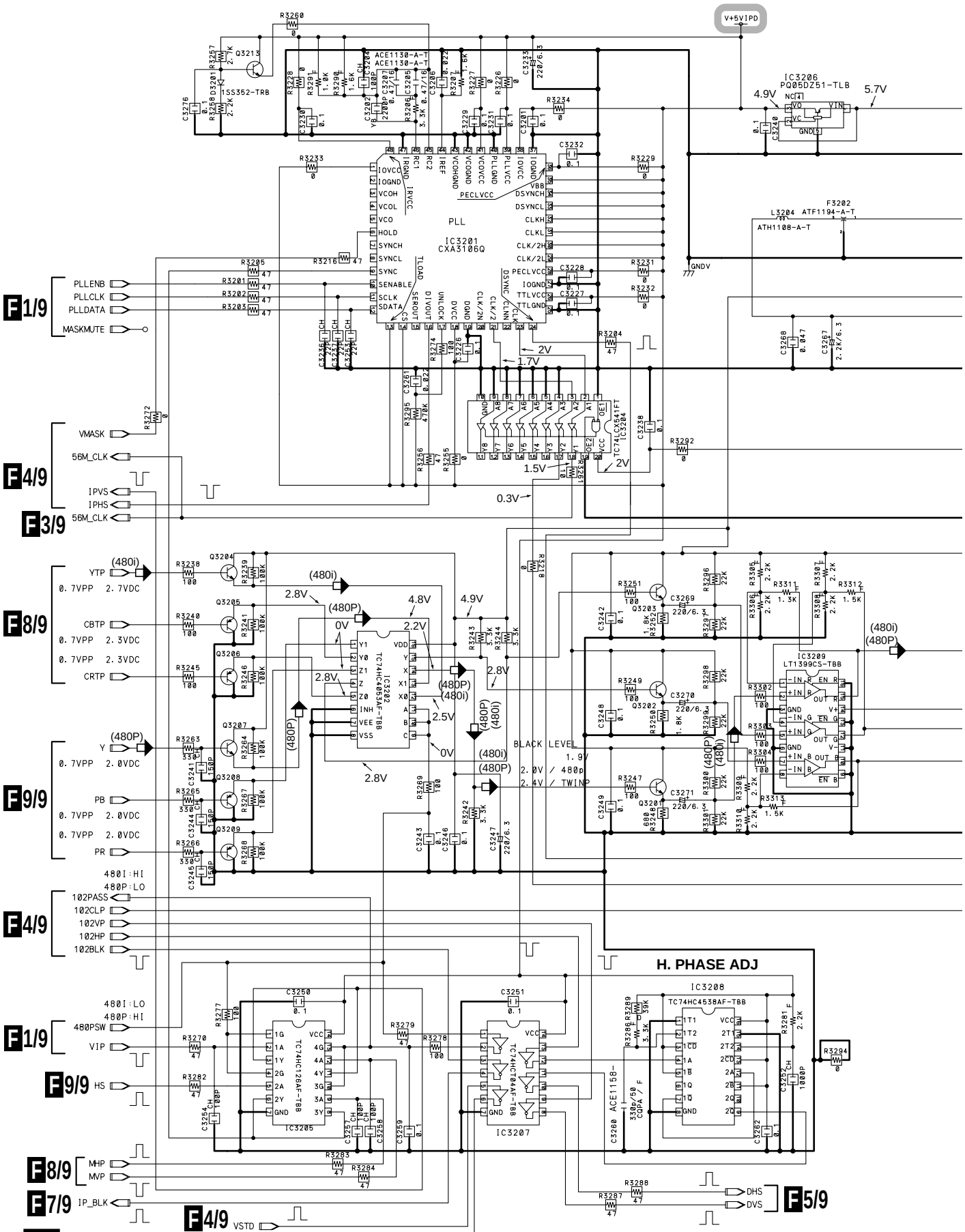

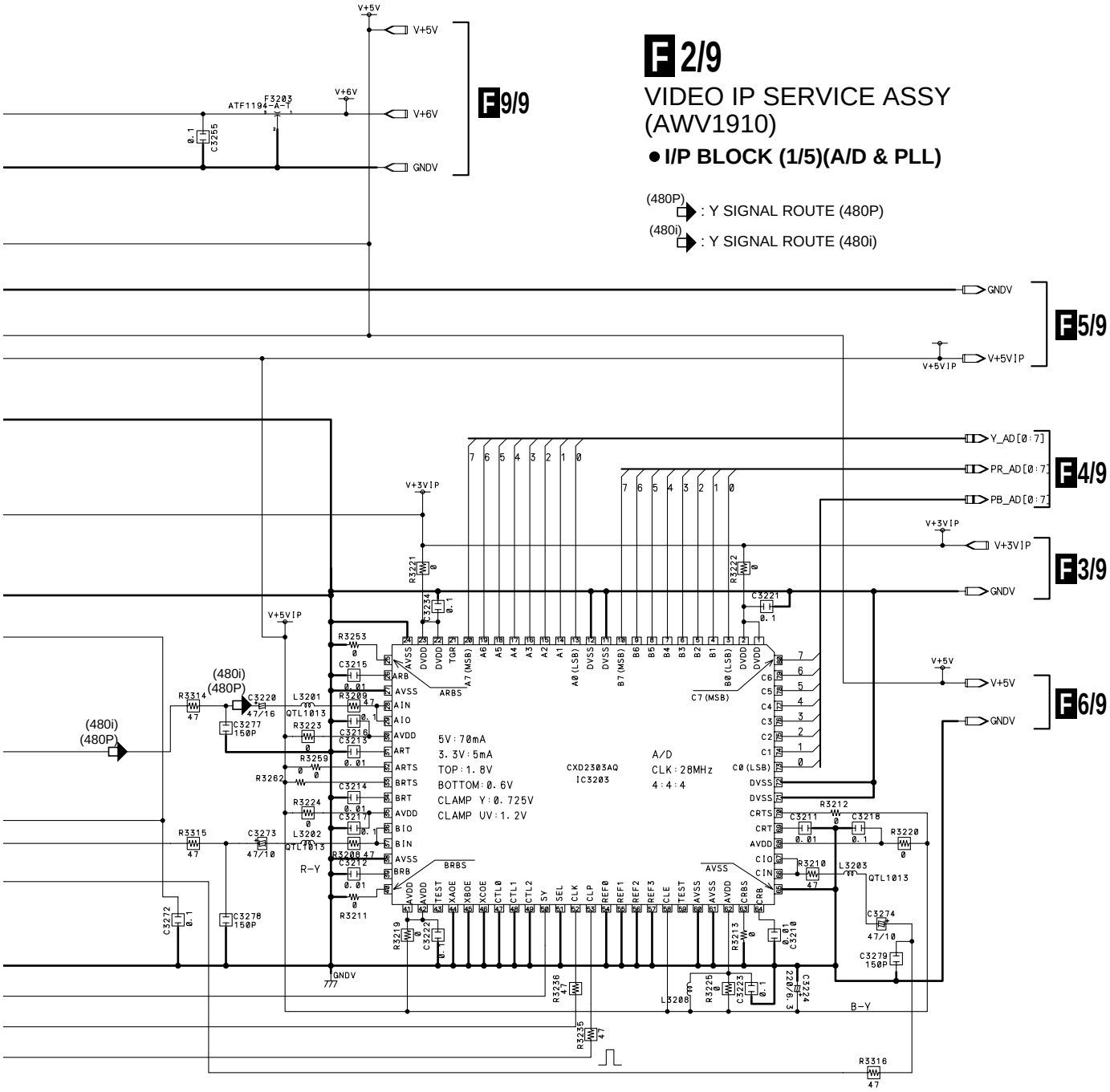

: The power supply is shown with the marked box.

3.13 VIDEO IP SERVICE ASSY (3/9)

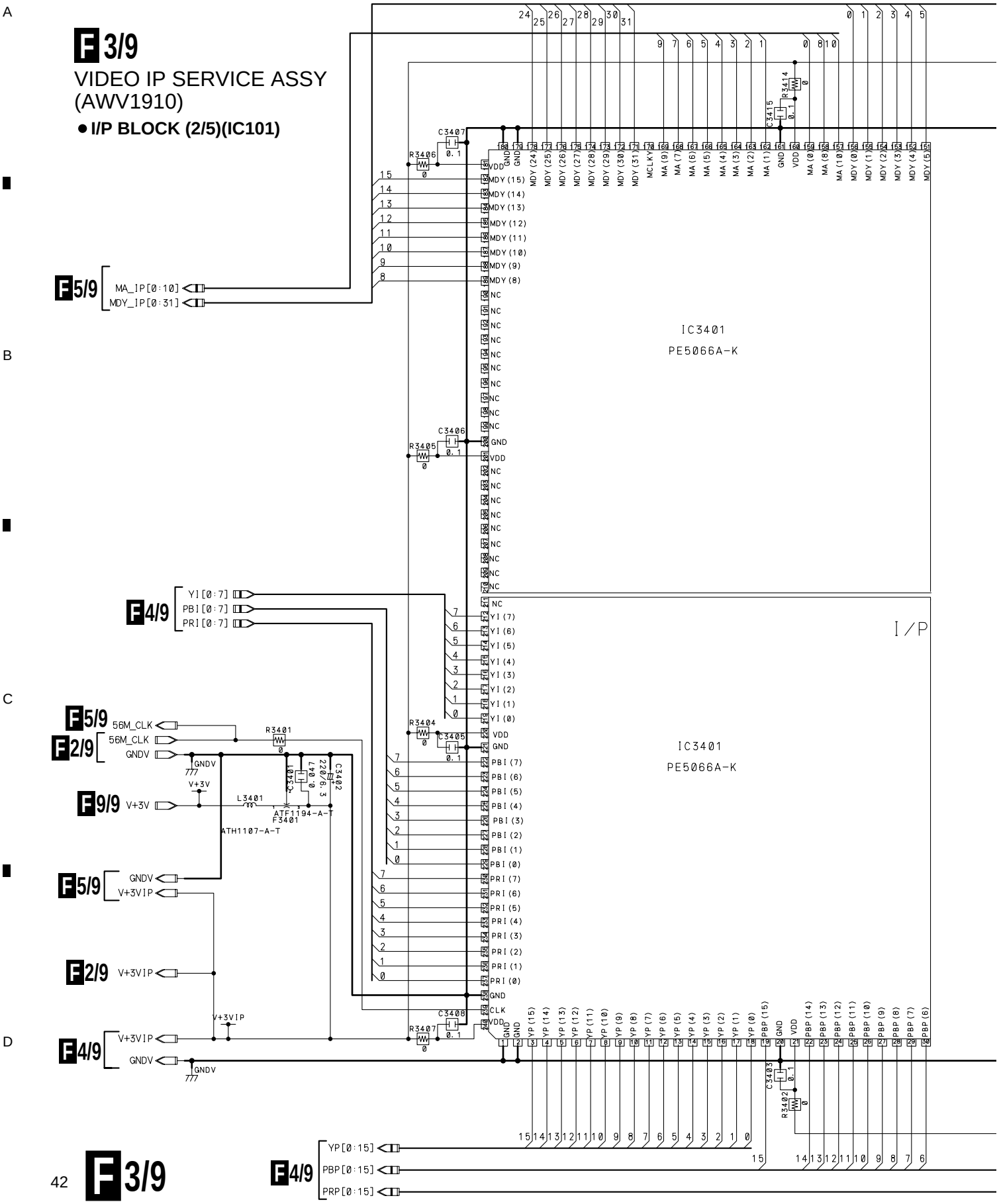

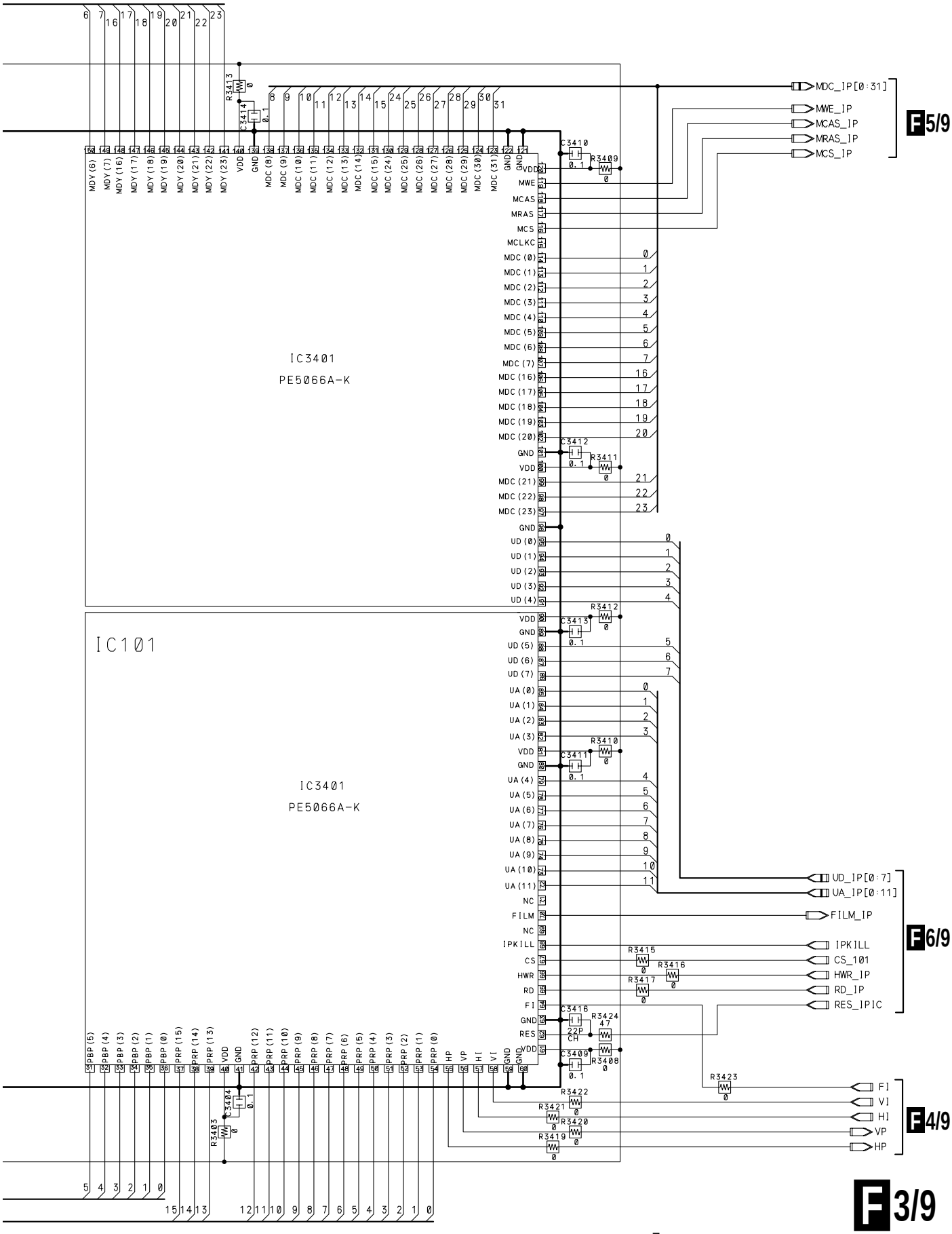
IC3401
PE5066A-K
IC101
IC3401
PE5066A-K
MDC_IP[0:31]
MWE_IP
MCAS_IP
MRAS_IP
MCS_IP
F5/9
UD_IP[0:7]
UA_IP[0:11]
FILM_IP
IPKILL
CS_101
HWR_IP
RD_IP
RES_IPIC
F6/9
FI
VI
HI
VP
HP
F4/9
R3413
C3414
C3410
R3409
C3412
R3411
R3412
C3413
R3410
C3411
R3415
R3416
R3417
C3416
R3424
C3409
R3408
R3423
R3422
R3421
R3420
R3419
C3404
R3403

3.14 VIDEO IP SERVICE ASSY (4/9)

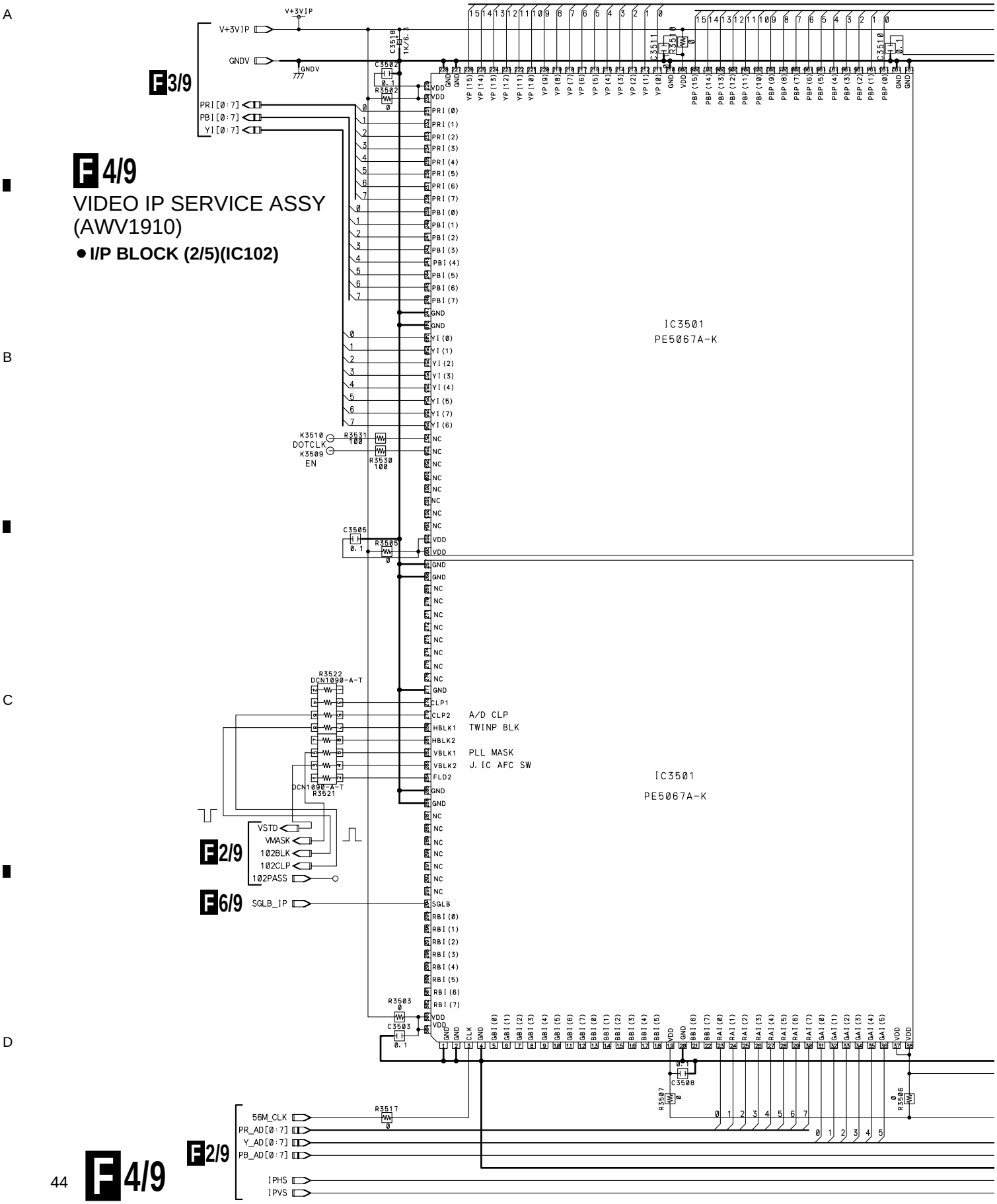

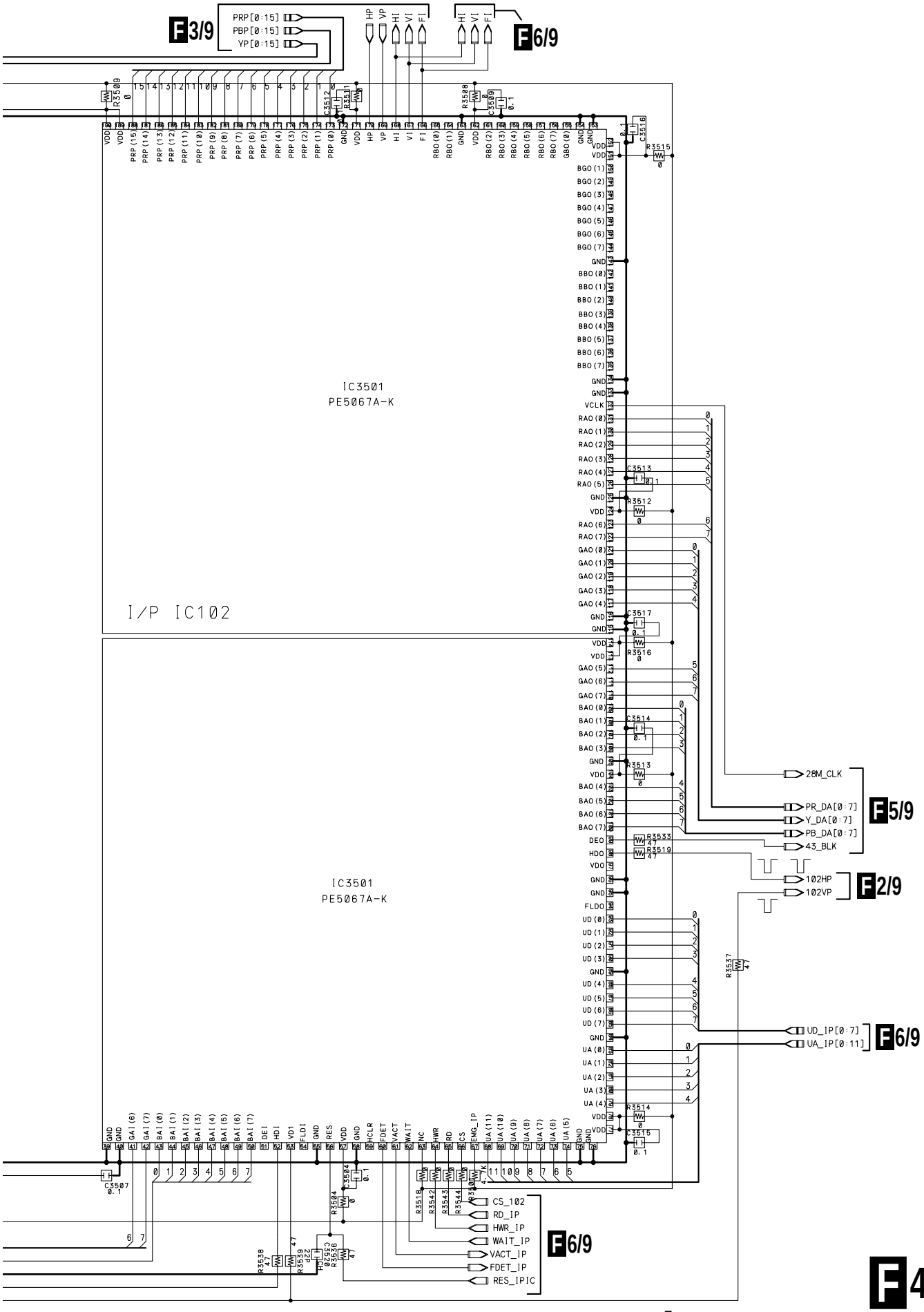
F3/9
PRP[0:15]
PBP[0:15]
YP[0:15]
F6/9
IC3501
PE5067A-K
I/P IC102
IC3501
PE5067A-K
28M_CLK
PR_DA[0:7]
Y_DA[0:7]
PB_DA[0:7]
43_BLK
F5/9
102HP
102VP
F2/9
UD_IP[0:7]
UA_IP[0:11]
F6/9
CS_102
RD_IP
HWR_IP
WAIT_IP
VACT_IP
FDET_IP
RES_IPIC
F6/9

3.15 VIDEO IP SERVICE ASSY (5/9)

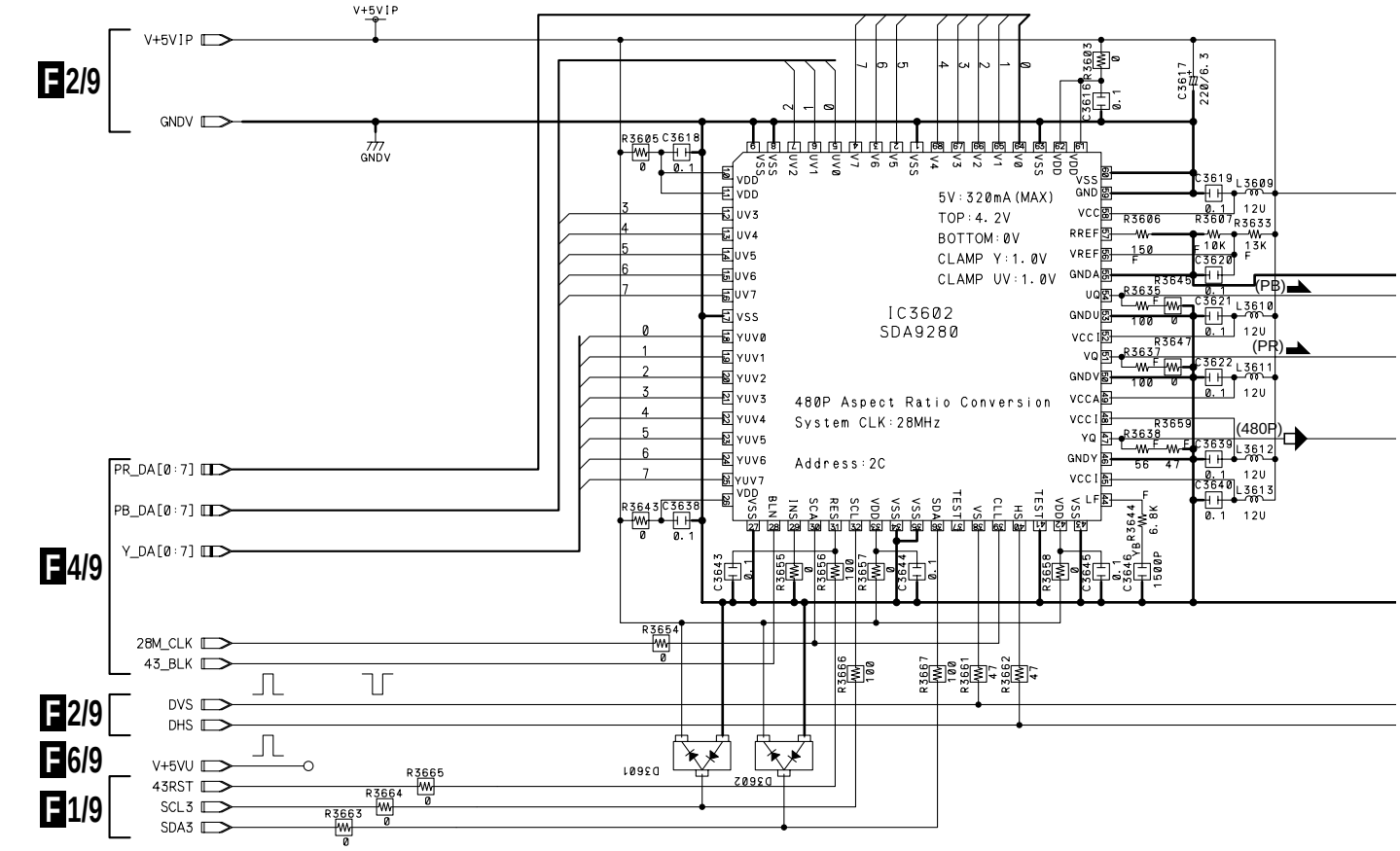

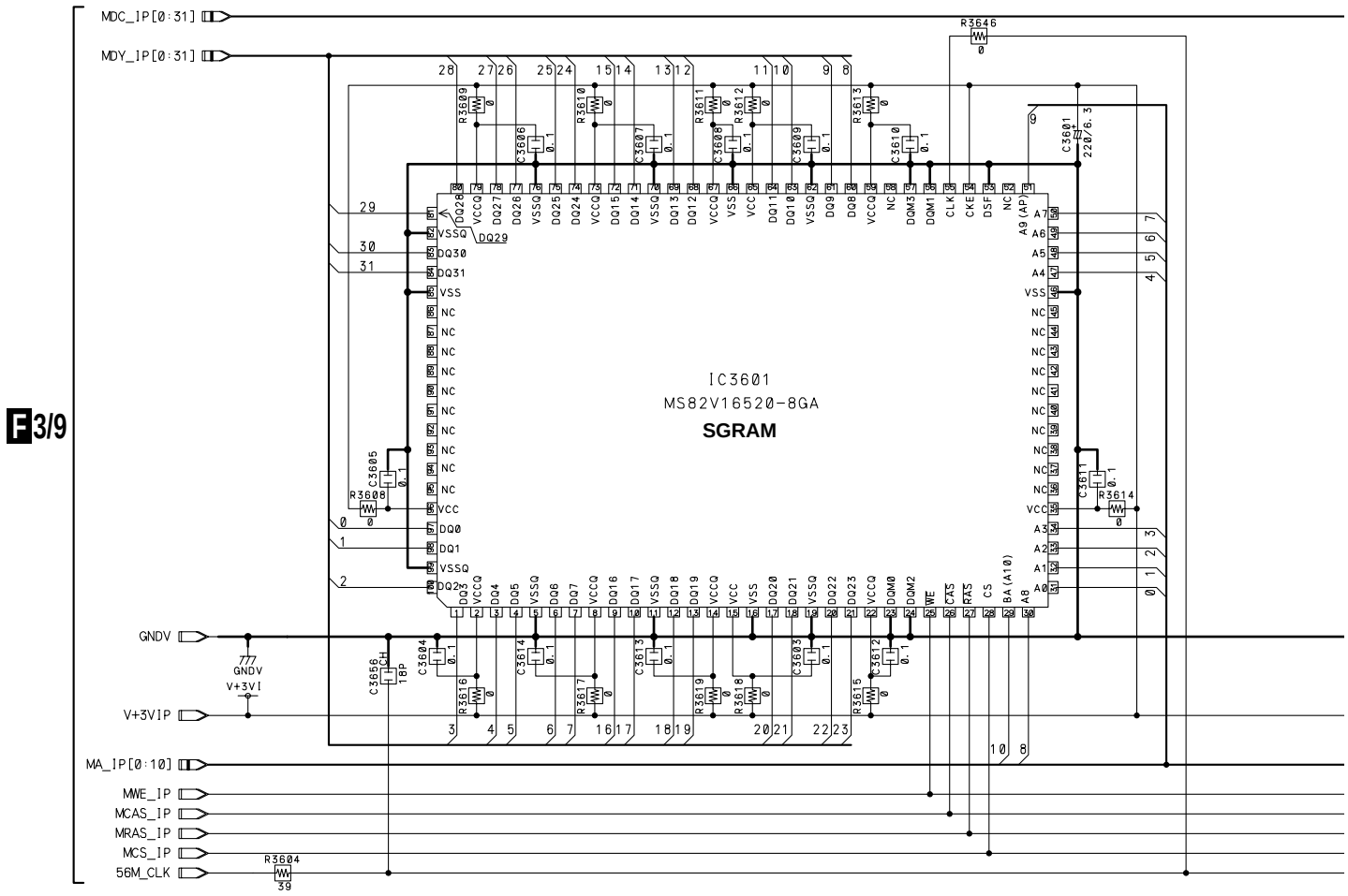

F 5/9

VIDEO IP SERVICE ASSY (AWV1910)

● I/P BLOCK (4/5)(RESIZE & SGRAM)

(480P) : Y SIGNAL ROUTE (480P)
(PB) : PB SIGNAL ROUTE
(PR) : PR SIGNAL ROUTE

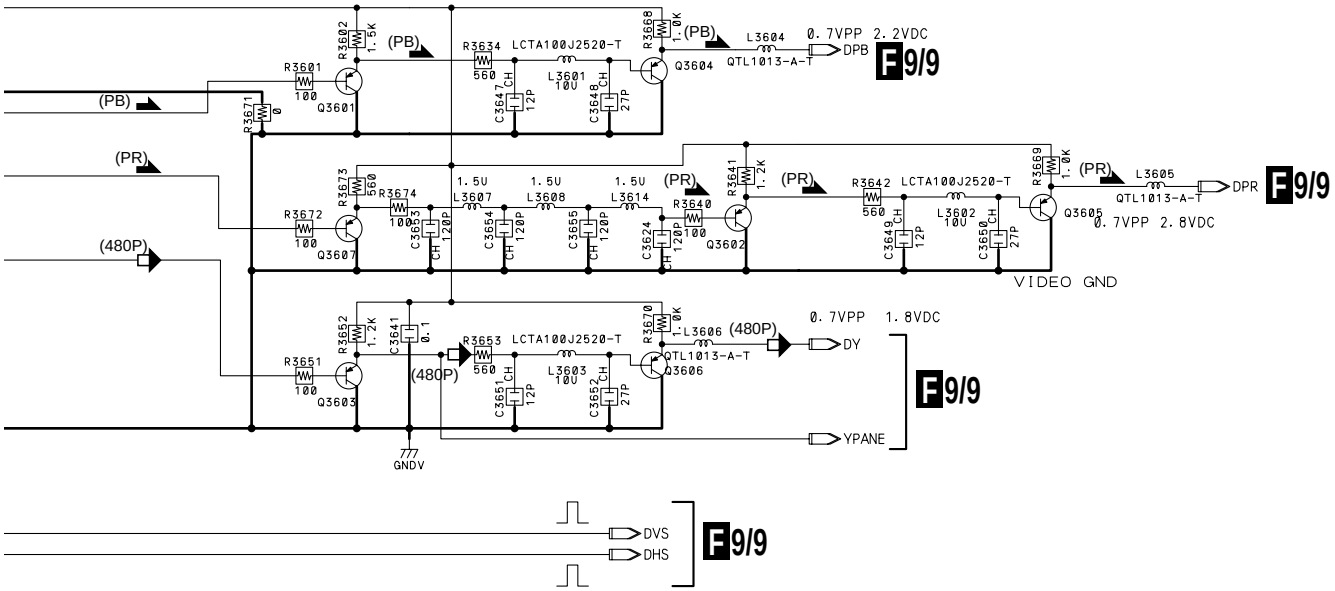

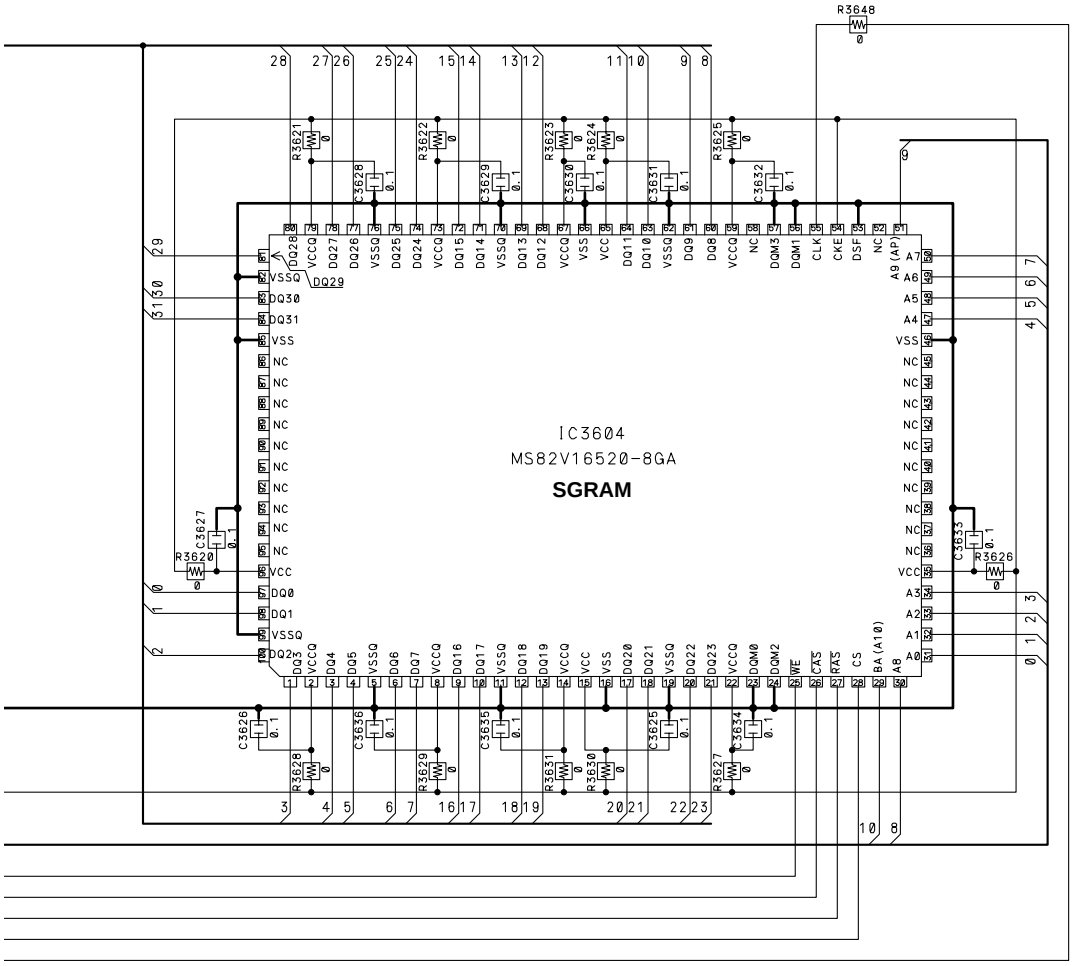

3.16 VIDEO IP SERVICE ASSY (6/9)

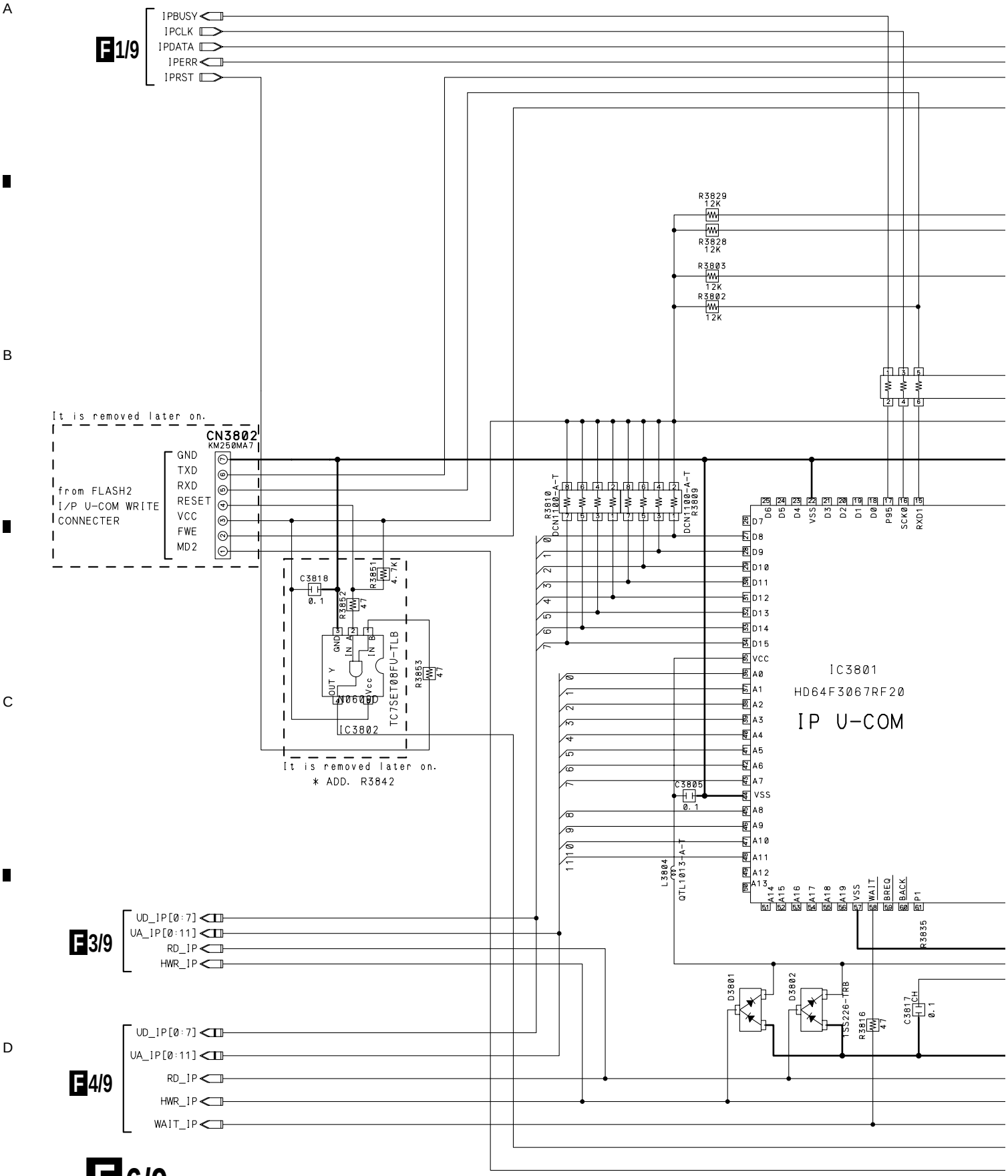

F 6/9

VIDEO IP SERVICE ASSY (AWV1910)

● **I/P BLOCK (5/5)(I/P U-COM)**

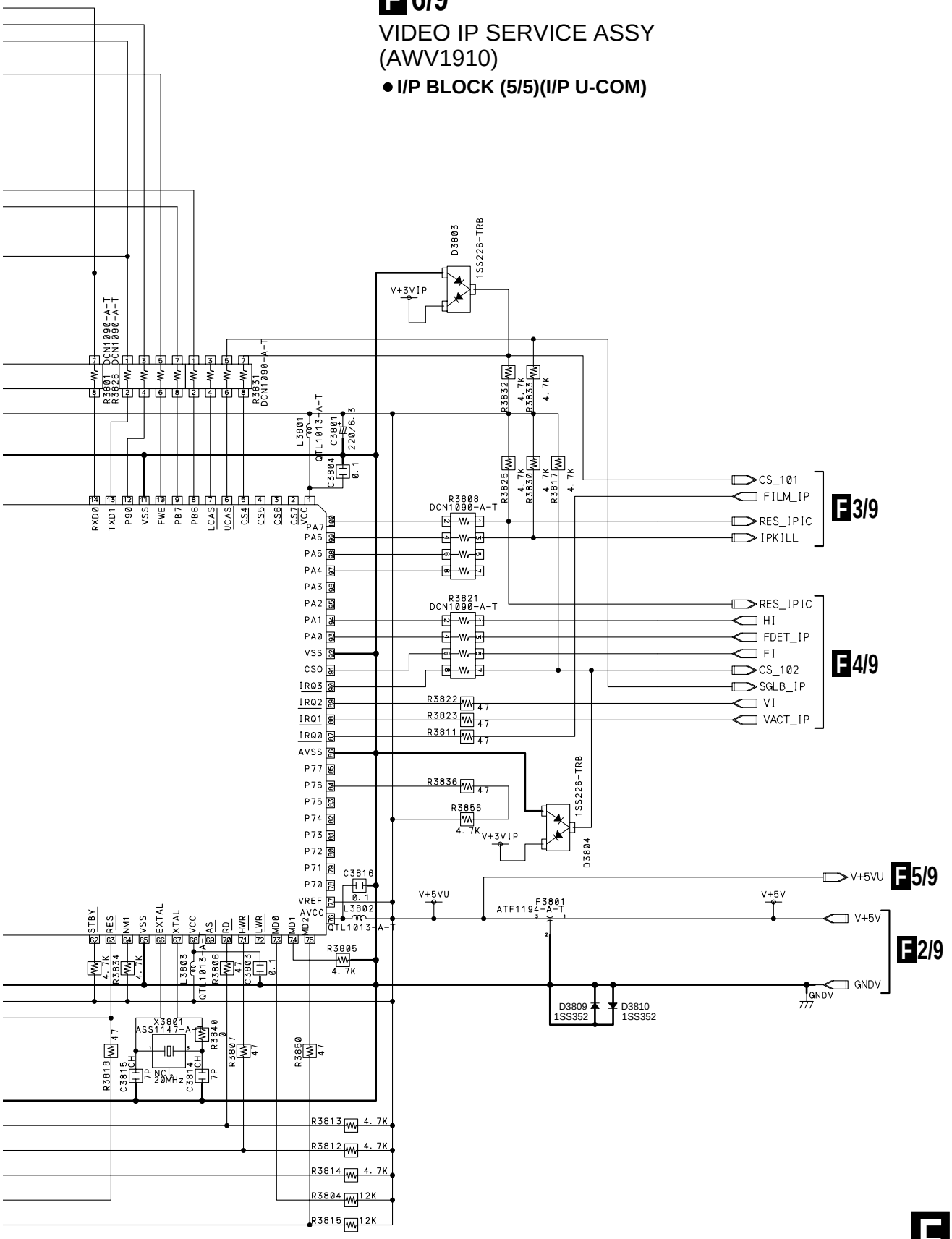

3.17 VIDEO IP SERVICE ASSY (7/9)

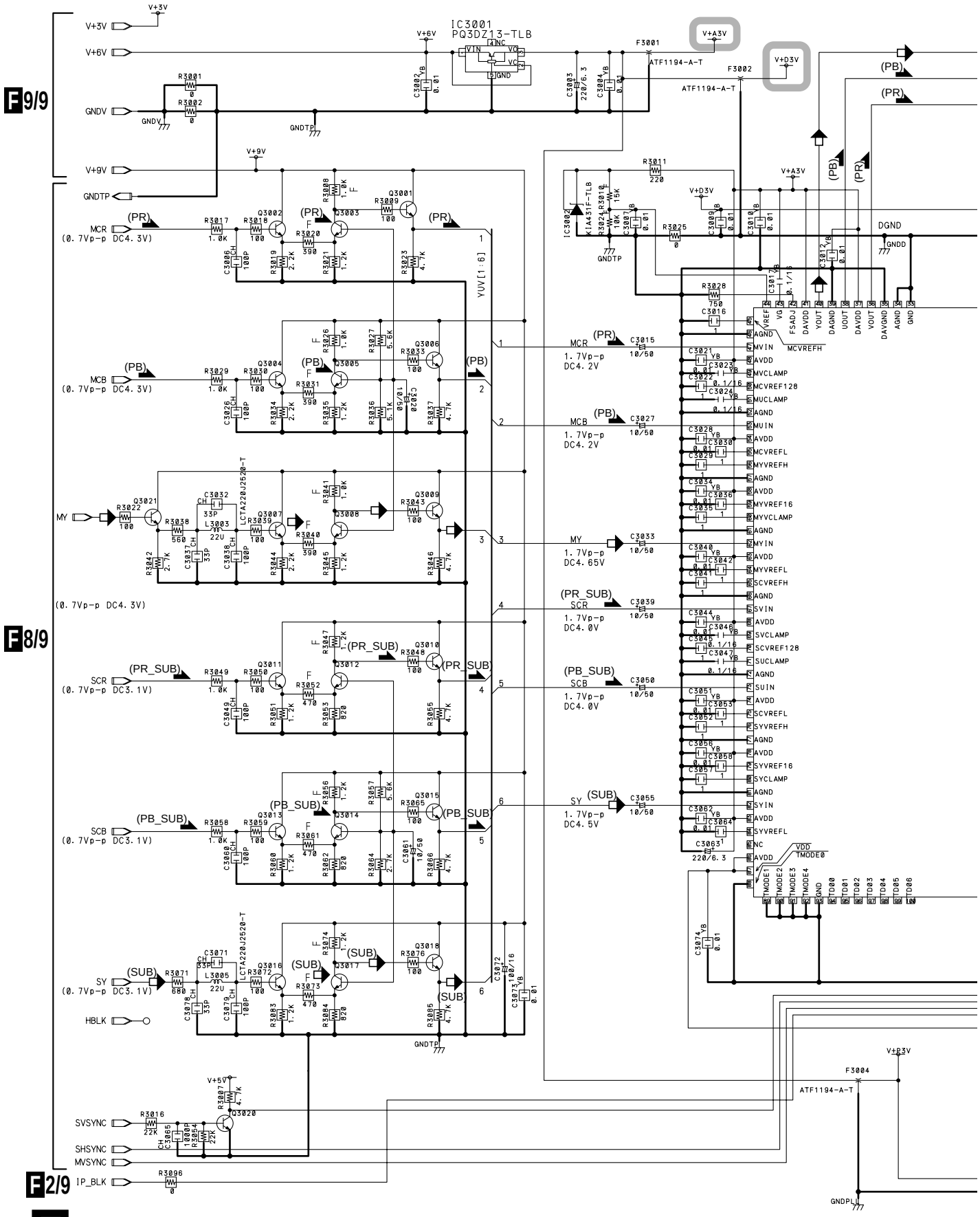

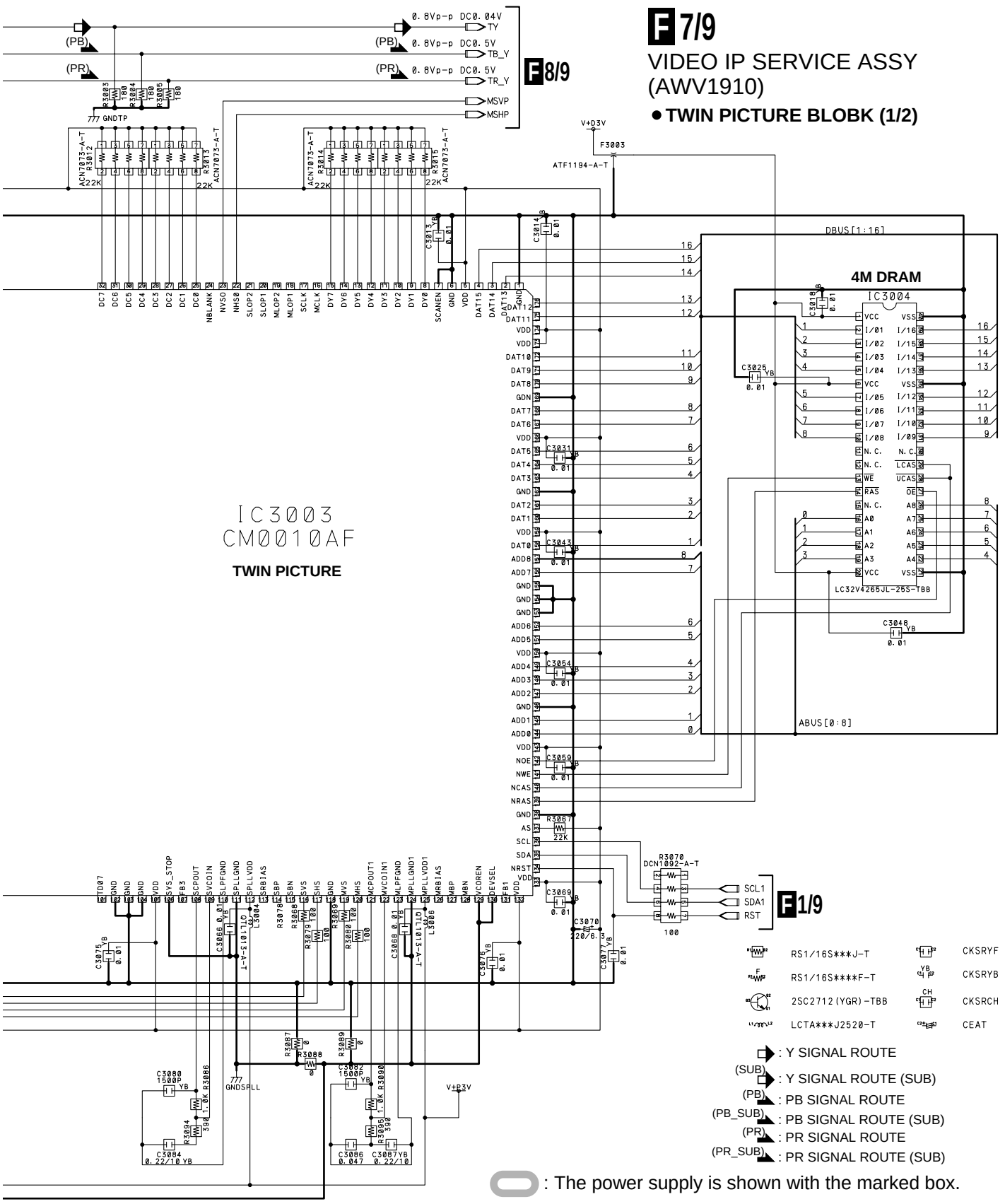
F 7/9
VIDEO IP SERVICE ASSY
(AWV1910)
● TWIN PICTURE BLOBK (1/2)
F 8/9
F 1/9
4M DRAM
IC3004
IC3003
CM0010AF
TWIN PICTURE
LC32V4265JL-25S-TBB
DBUS[1:16]
ABUS[0:8]
SCL1
SDA1
RST
: Y SIGNAL ROUTE
: Y SIGNAL ROUTE (SUB)
: PB SIGNAL ROUTE
: PB SIGNAL ROUTE (SUB)
: PR SIGNAL ROUTE
: PR SIGNAL ROUTE (SUB)
: The power supply is shown with the marked box.

3.18 VIDEO IP SERVICE ASSY (8/9)

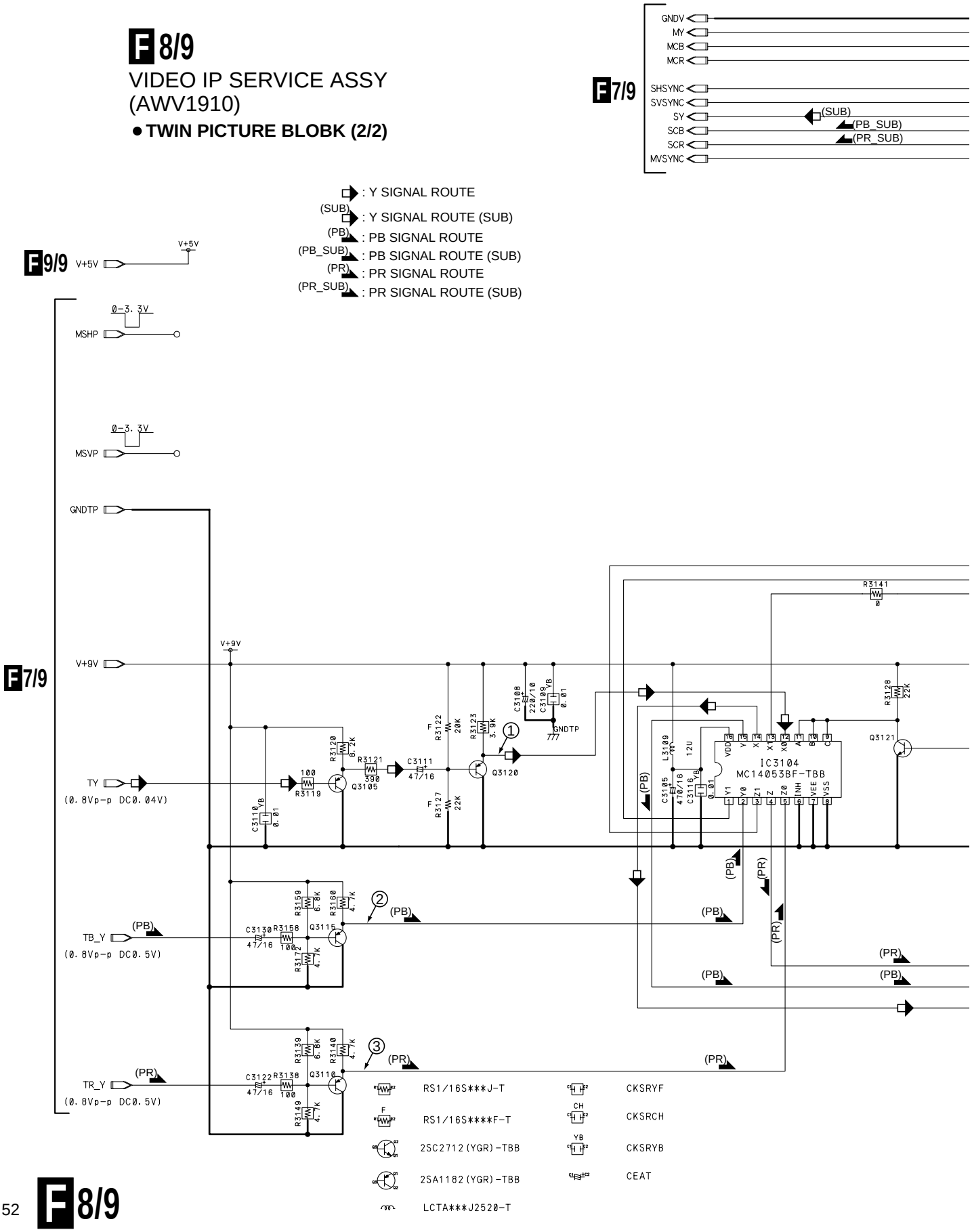

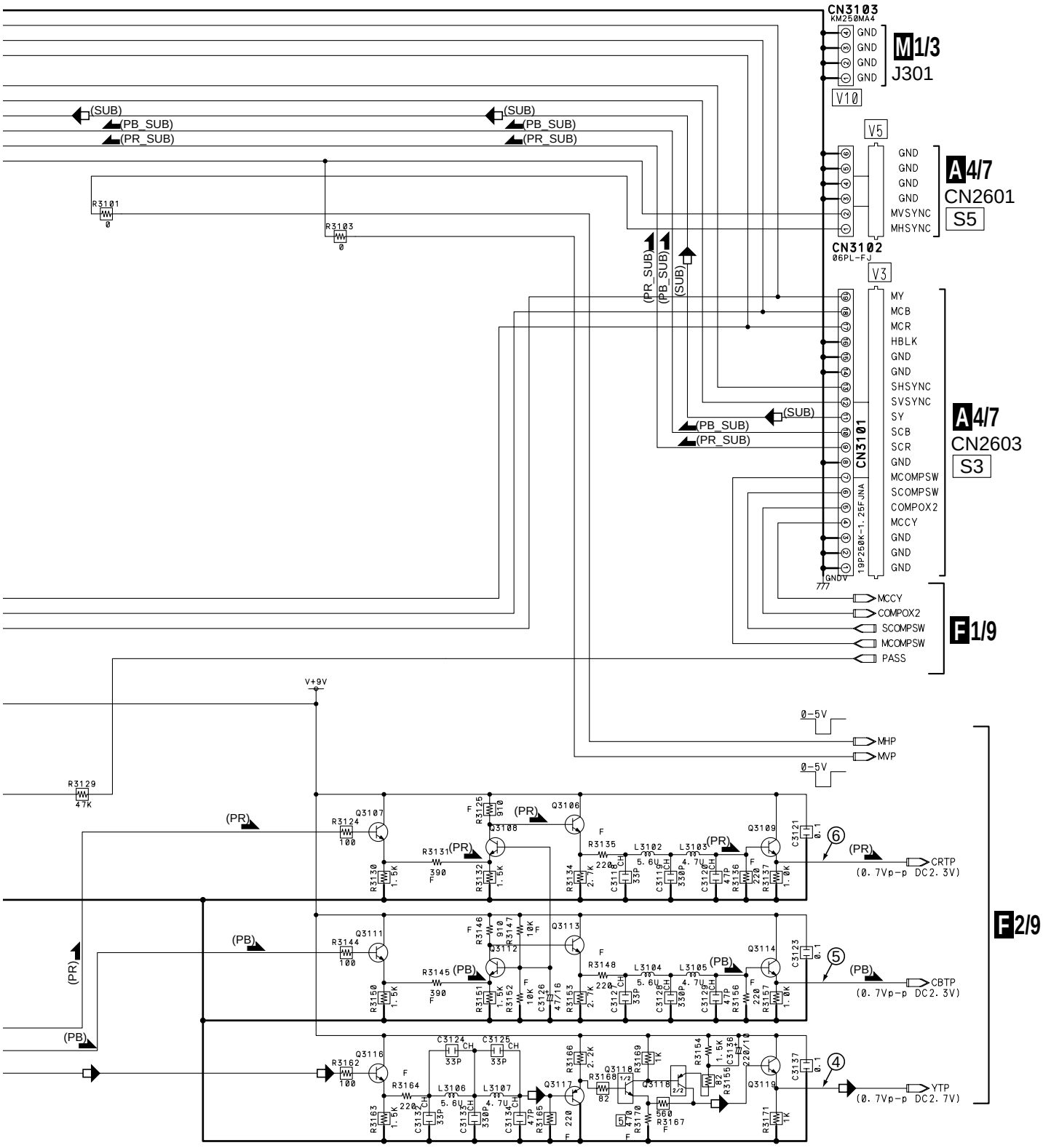
CN3103
KM250MA4
GND
GND
GND
GND
M1/3
J301
V10
(SUB)
(PB_SUB)
(PR_SUB)
V5
GND
GND
GND
GND
MVSYNC
MHSYNC
A4/7
CN2601
S5
R3101
0
R3103
0
CN3102
06PL-FJ
V3
MY
MCB
MCR
HBLK
GND
GND
SHSYNC
SVSYNC
SY
SCB
SCR
GND
MCOMPSW
SCOMPSW
COMPOX2
MCCY
GND
GND
GND
CN3101
19P250K-1.25F-JNA
A4/7
CN2603
S3
MCCY
COMPOX2
SCOMPSW
MCOMPSW
PASS
F1/9
V+9V
0-5V
MHP
MVP
R3129
47K
(PR)
(PB)
Q3107
Q3108
Q3106
Q3109
Q3111
Q3112
Q3113
Q3114
Q3116
Q3117
Q3118
Q3119
CRTP
(0.7Vp-p DC2.3V)
CBTP
(0.7Vp-p DC2.3V)
YTP
(0.7Vp-p DC2.7V)
F2/9

3.19 VIDEO IP SERVICE ASSY (9/9)

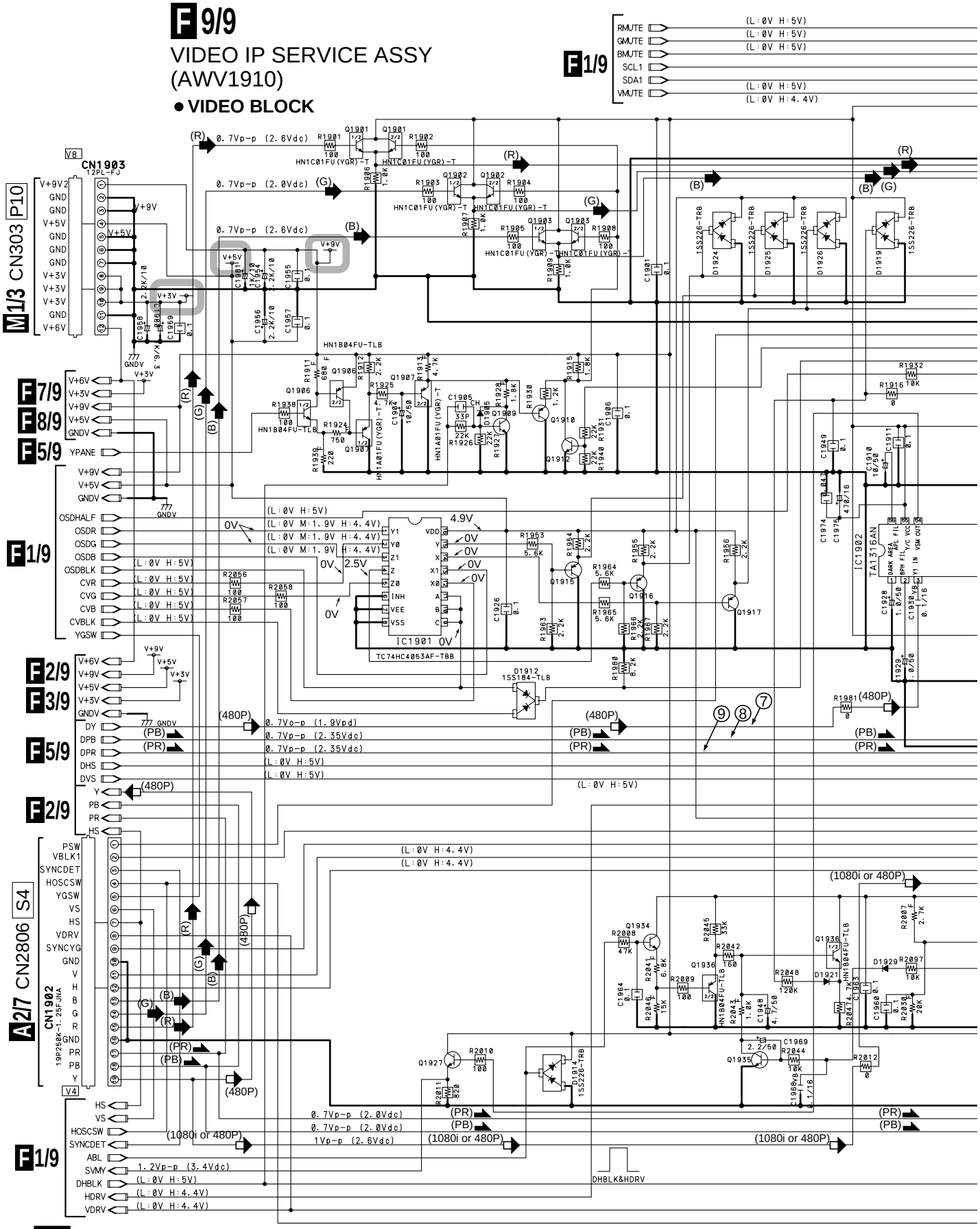

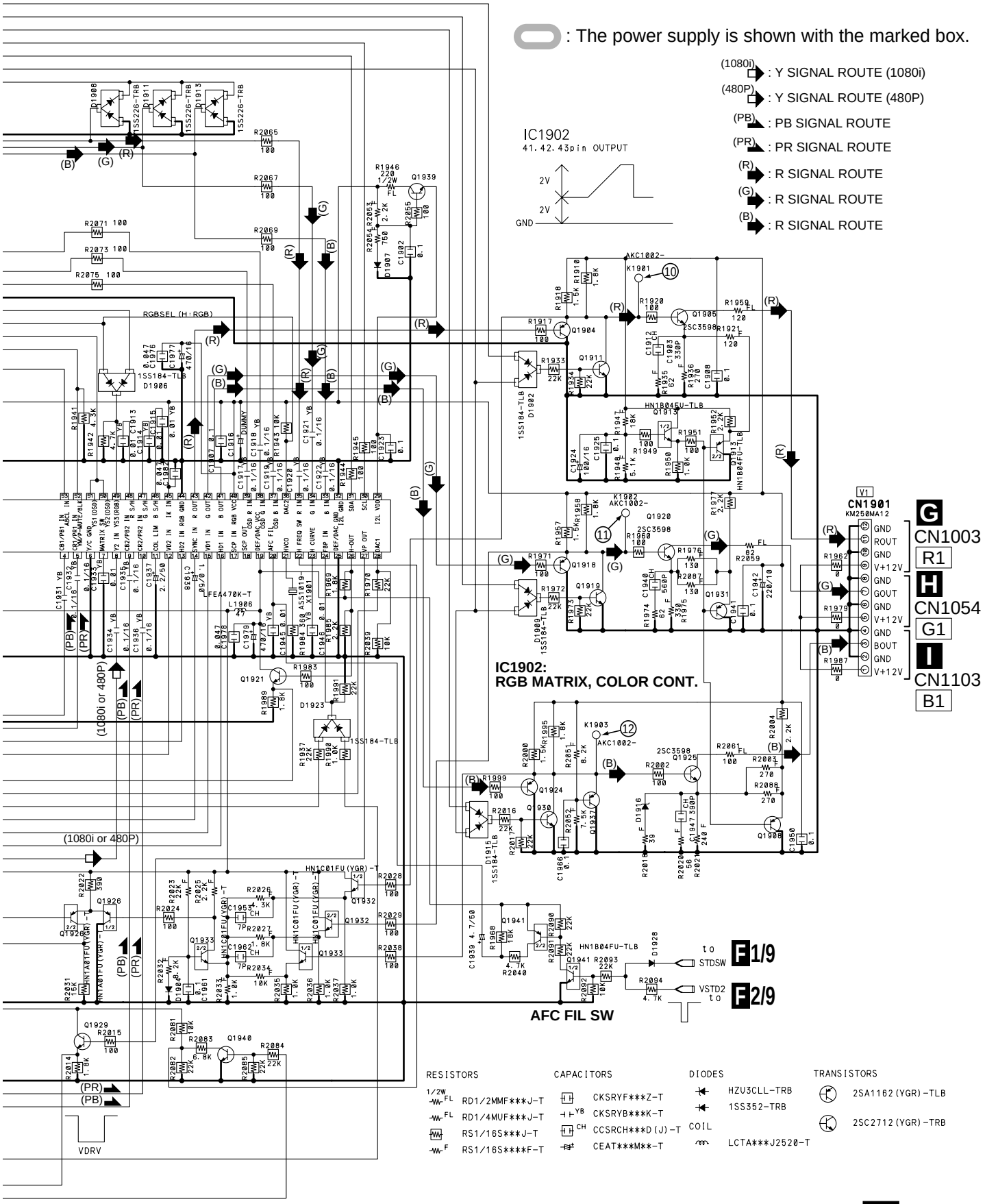
: The power supply is shown with the marked box.
(1080i) : Y SIGNAL ROUTE (1080i)
(480P) : Y SIGNAL ROUTE (480P)
(PB) : PB SIGNAL ROUTE
(PR) : PR SIGNAL ROUTE
(R) : R SIGNAL ROUTE
(G) : R SIGNAL ROUTE
(B) : R SIGNAL ROUTE
IC1902
41.42.43pin OUTPUT
2V
2V
GND
IC1902:
RGB MATRIX, COLOR CONT.
AFC FIL SW
CN1901
KM250MA12
G
CN1003
R1
H
CN1054
G1
I
CN1103
B1
GND
ROUT
GND
V+12V
GND
GOUT
GND
V+12V
GND
BOUT
GND
V+12V
to STDSW
F1/9
VSTD2 to
F2/9
(1080i or 480P)
VDRV
RGBSEL (H:RGB)
RESISTORS
RD1/2MMF***J-T
RD1/4MUF***J-T
RS1/16S***J-T
RS1/16S****F-T
CAPACITORS
CKSRYF***Z-T
CKSRYB***K-T
CCSRCH***D(J)-T
CEAT***M**-T
DIODES
HZU3CLL-TRB
1SS352-TRB
COIL
LCTA***J2520-T
TRANSISTORS
2SA1162(YGR)-TLB
2SC2712(YGR)-TRB

3.20 R, G and B CRT DRIVE ASSYS

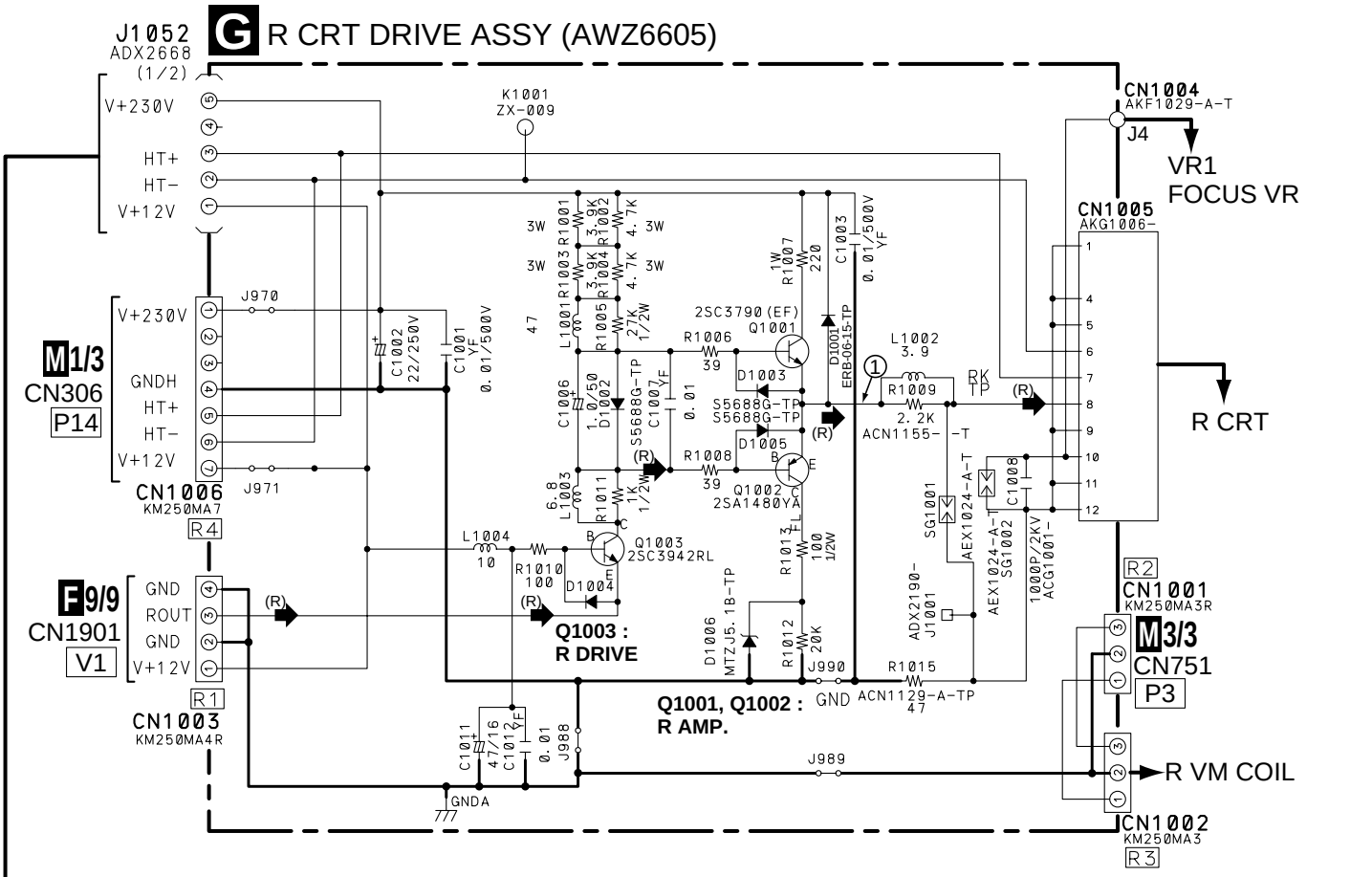

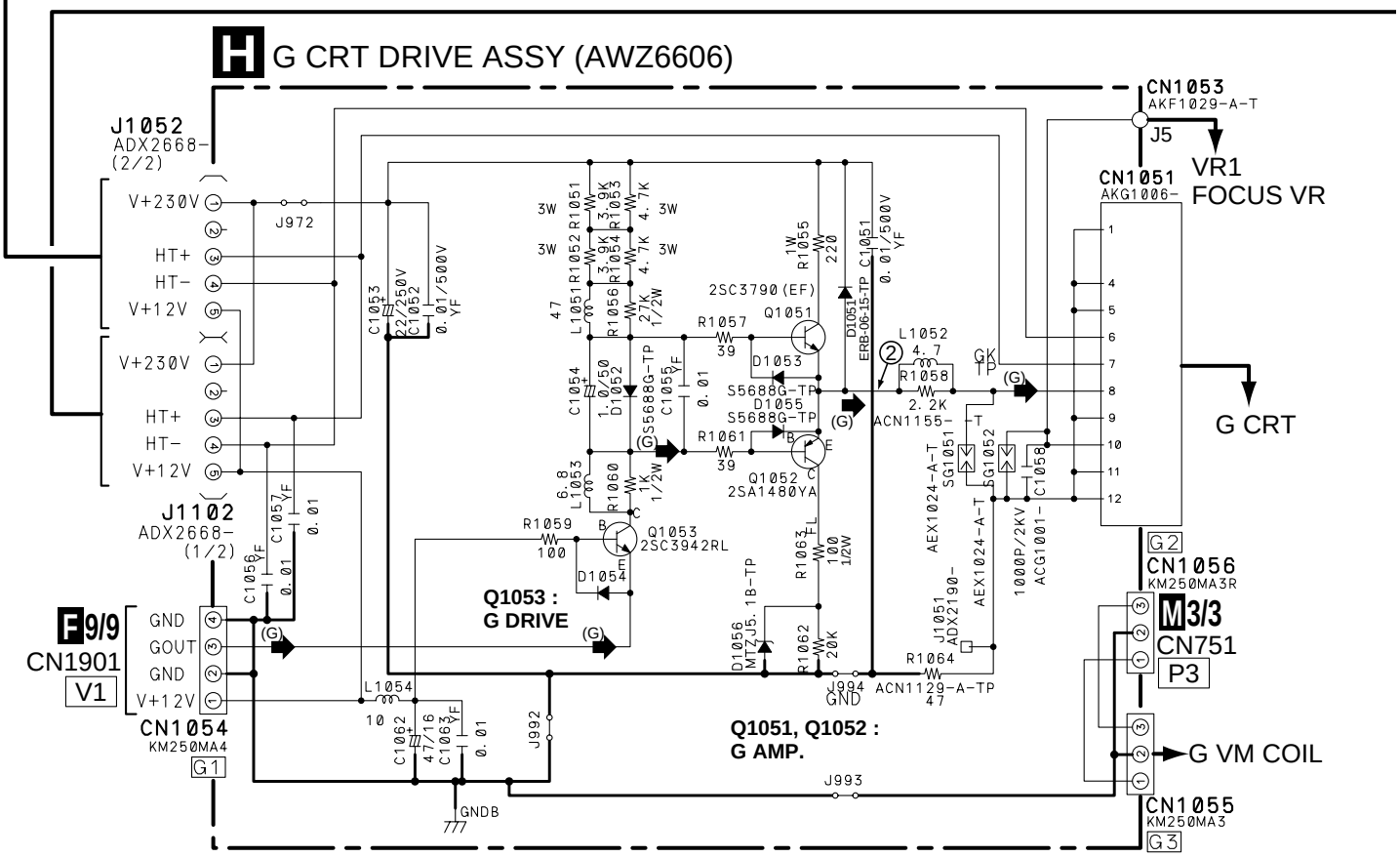

(R) : R SIGNAL ROUTE
(G) : G SIGNAL ROUTE
(B) : B SIGNAL ROUTE

Input Signal

Input	: INPUT 1 (COMPOSITE)
Video Signal	: EIA Color-bar
Picture Quality	: STANDARD
Range	: DC Range

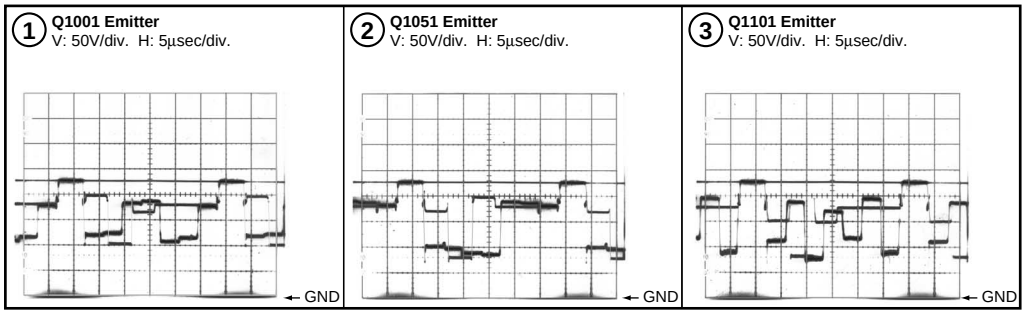

I B CRT DRIVE ASSY (AWZ6607)

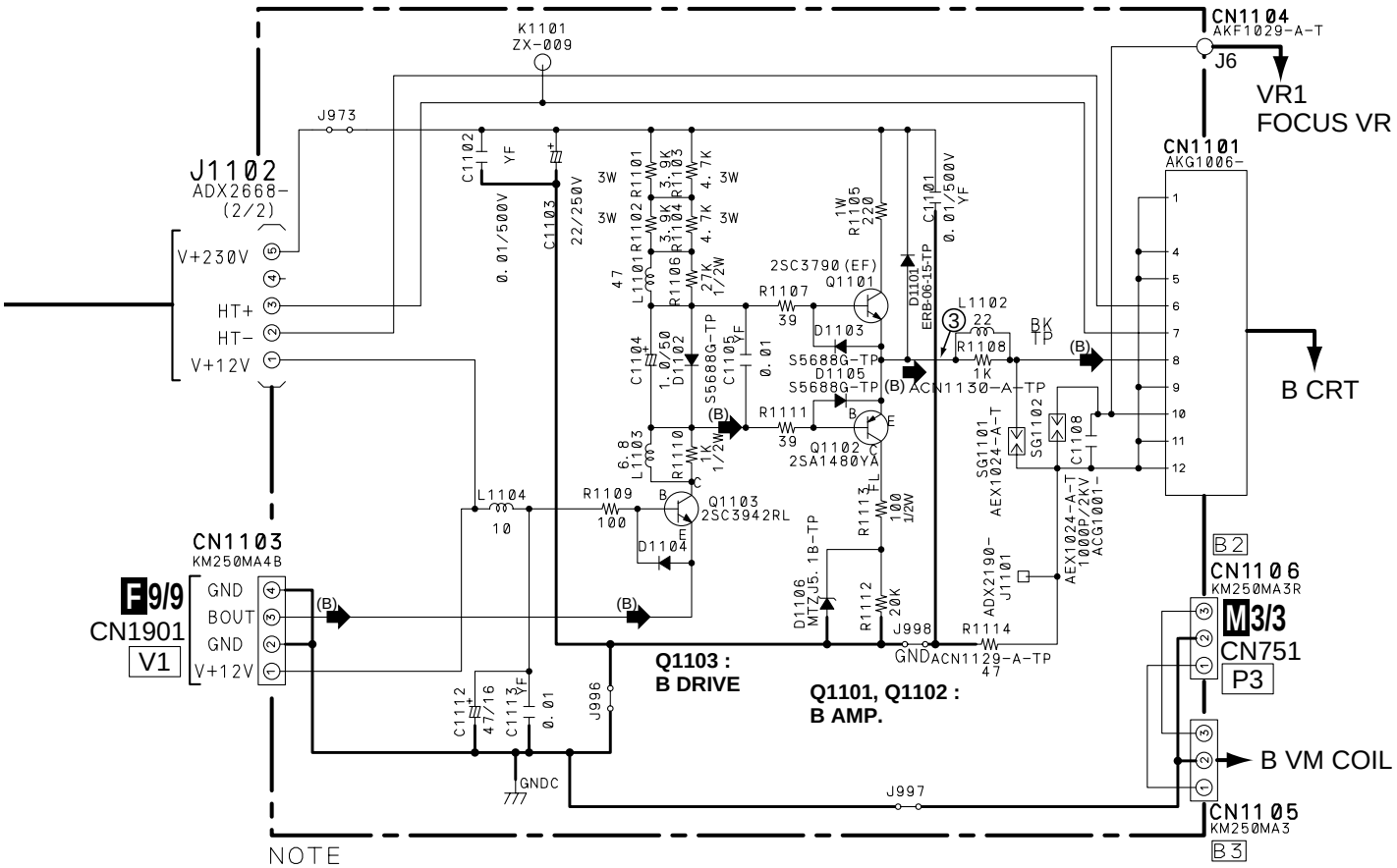

NOTE

RESISTORS Ω

RD1/4MUF***J-T
RD1/4PU***J-T
RD1/2PM***J-T
RS1MMF***J-T
RS3LMF***J

CAPACITORS µF

0.01/500V YF CKCYF
YF CKCYE
CEAT

DIODE

1SS133-T

COIL µH

LAU***J-T

3.21 DEFLECTION SERVICE ASSY (1/3)

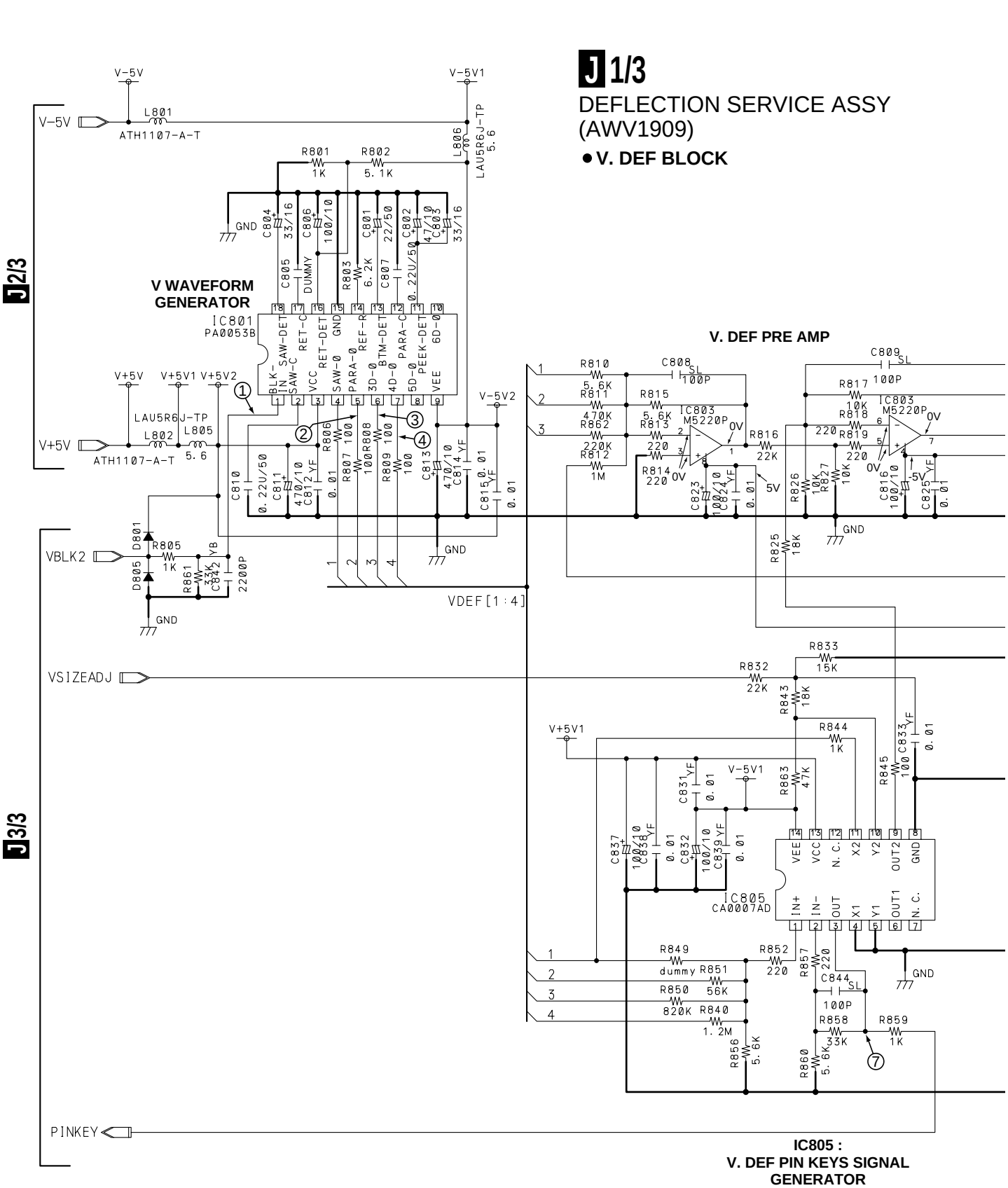

IC805 :
V. DEF PIN KEYS SIGNAL GENERATOR

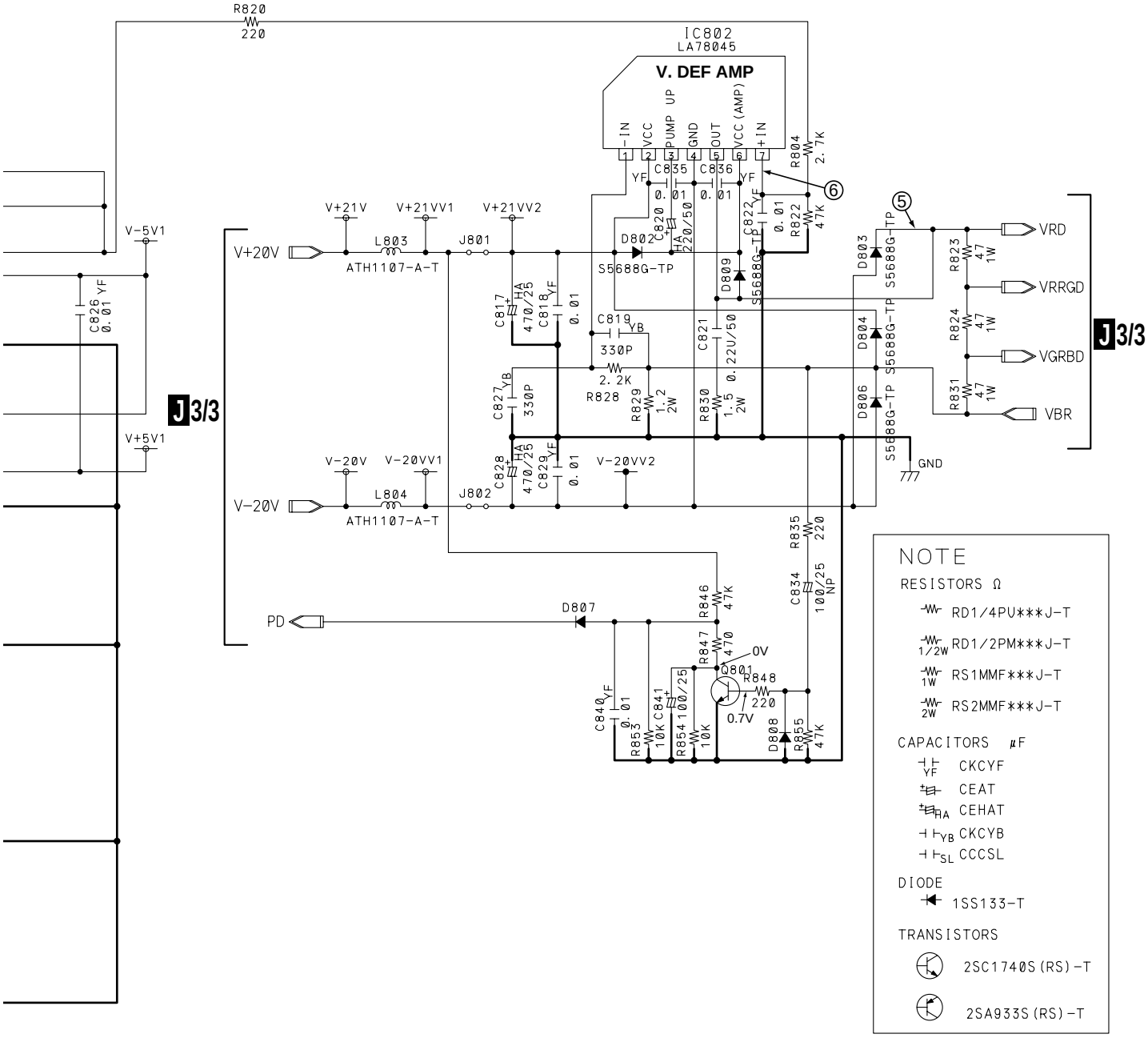
R820
220
IC802
LA78045
V. DEF AMP
-IN
VCC
PUMP UP
GND
OUT
VCC(AMP)
+IN
R804
2.7K
C835
C836
0.01
0.01
C820
220/50
C822
0.01
R822
47K
V+21V
V+21VV1
V+21VV2
V-5V1
V+20V
L803
ATH1107-A-T
J801
D802
S5688G-TP
D809
D803
D804
D806
R823
R824
R831
47
1W
VRD
VRRGD
VGRBD
VBR
J3/3
C826
0.01
C817
470/25
C818
0.01
C819
330P
2.2K
R828
C821
0.22U/50
C827
330P
R829
1.2
2W
R830
1.5
2W
V+5V1
GND
V-20V
V-20VV1
V-20VV2
C828
470/25
C829
0.01
L804
ATH1107-A-T
J802
R835
220
C834
100/25
R846
47K
PD
D807
R847
470
0V
Q801
R848
220
0.7V
C840
0.01
R853
10K
C841
100/25
R854
10K
D808
R855
47K
NOTE
RESISTORS Ω
RD1/4PU***J-T
RD1/2PM***J-T
RS1MMF***J-T
RS2MMF***J-T
CAPACITORS μF
CKCYF
CEAT
CEHAT
CKCYB
CCCSL
DIODE
1SS133-T
TRANSISTORS
2SC1740S(RS)-T
2SA933S(RS)-T

3.22 DEFLECTION SERVICE ASSY (2/3)

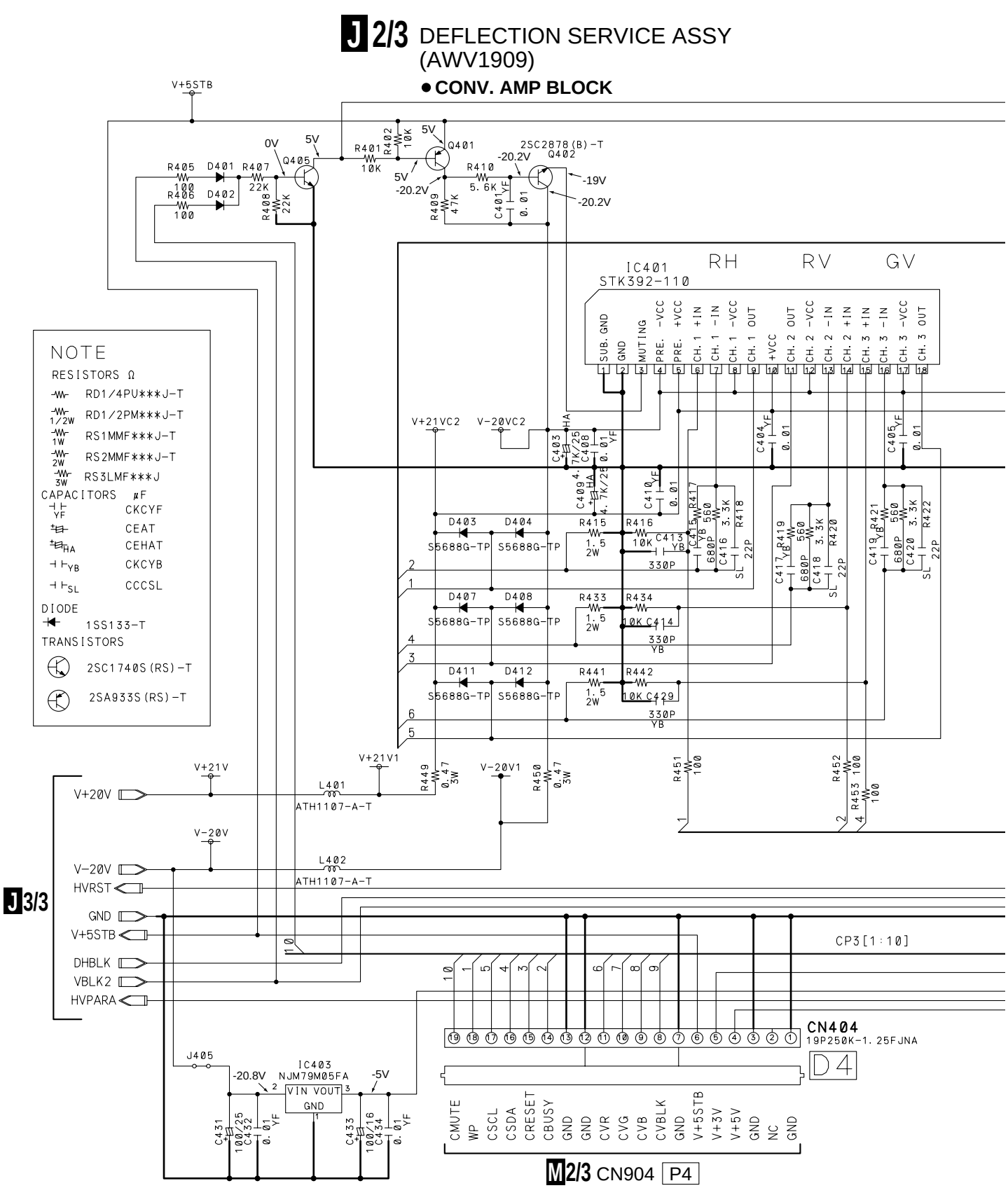

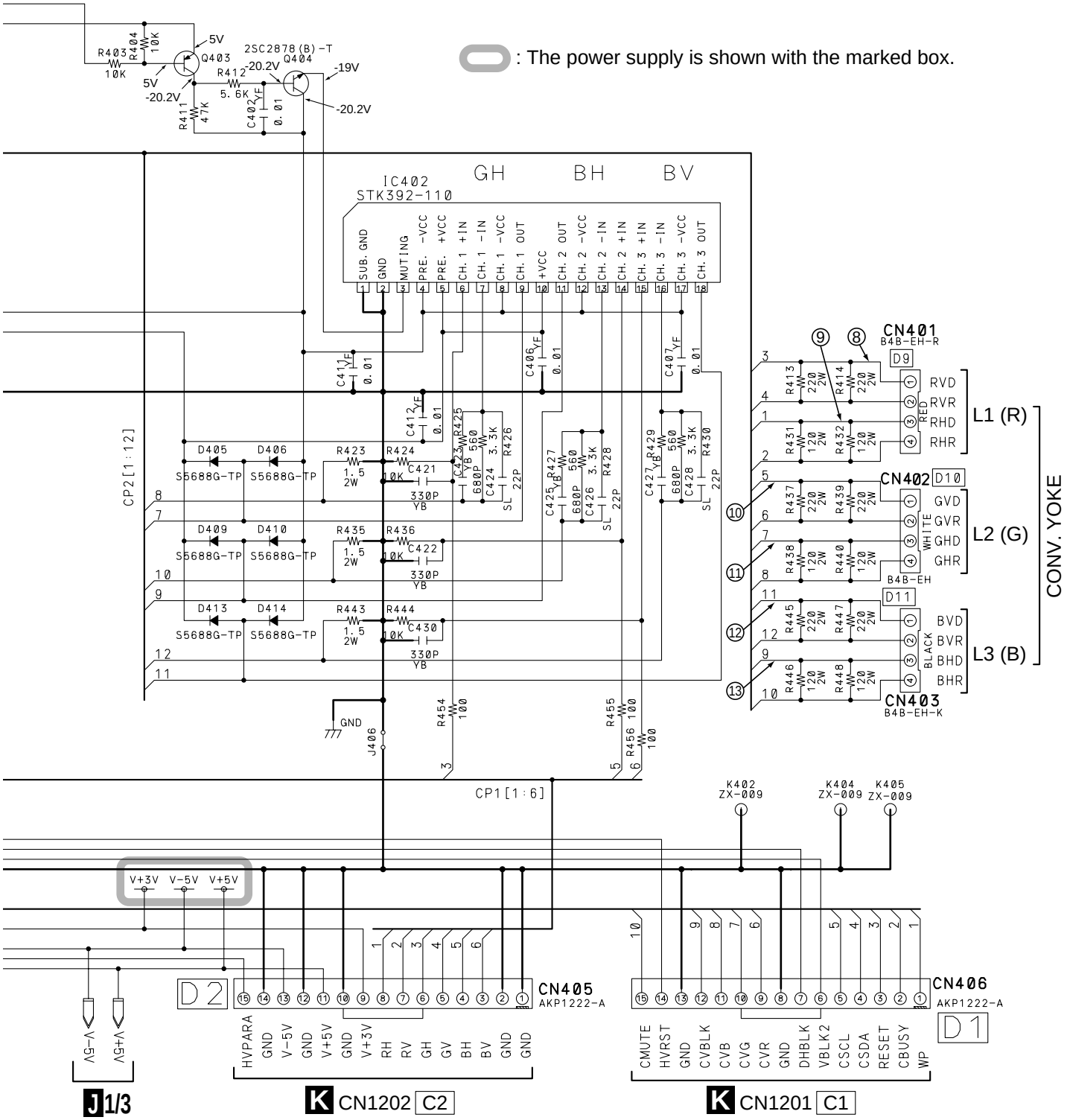
: The power supply is shown with the marked box.
IC402
STK392-110
GH
BH
BV
SUB. GND
GND
MUTING
PRE. -VCC
PRE. +VCC
CH. 1 +IN
CH. 1 -IN
CH. 1 -VCC
CH. 1 OUT
+VCC
CH. 2 OUT
CH. 2 -VCC
CH. 2 -IN
CH. 2 +IN
CH. 3 +IN
CH. 3 -IN
CH. 3 -VCC
CH. 3 OUT
Q403
Q404
2SC2878(B)-T
5V
-20.2V
-19V
CN401
B4B-EH-R
D9
RVD
RVR
RHD
RHR
L1 (R)
CN402
D10
GVD
GVR
GHD
GHR
L2 (G)
B4B-EH
D11
BVD
BVR
BHD
BHR
L3 (B)
CN403
B4B-EH-K
CONV. YOKE
CP2[1:12]
CP1[1:6]
S5688G-TP
GND
J406
K402
ZX-009
K404
ZX-009
K405
ZX-009
V+3V
V-5V
V+5V
D2
CN405
AKP1222-A
HVPARA
GND
V-5V
GND
V+5V
GND
V+3V
RH
RV
GH
GV
BH
BV
GND
GND
CN406
AKP1222-A
D1
CMUTE
HVRST
GND
CVBLK
CVB
CVG
CVR
GND
DHBLK
VBLK2
CSCL
CSDA
RESET
CBUSY
WP
J 1/3
K CN1202 C2
K CN1201 C1

3.23 DEFLECTION SERVICE ASSY (3/3)

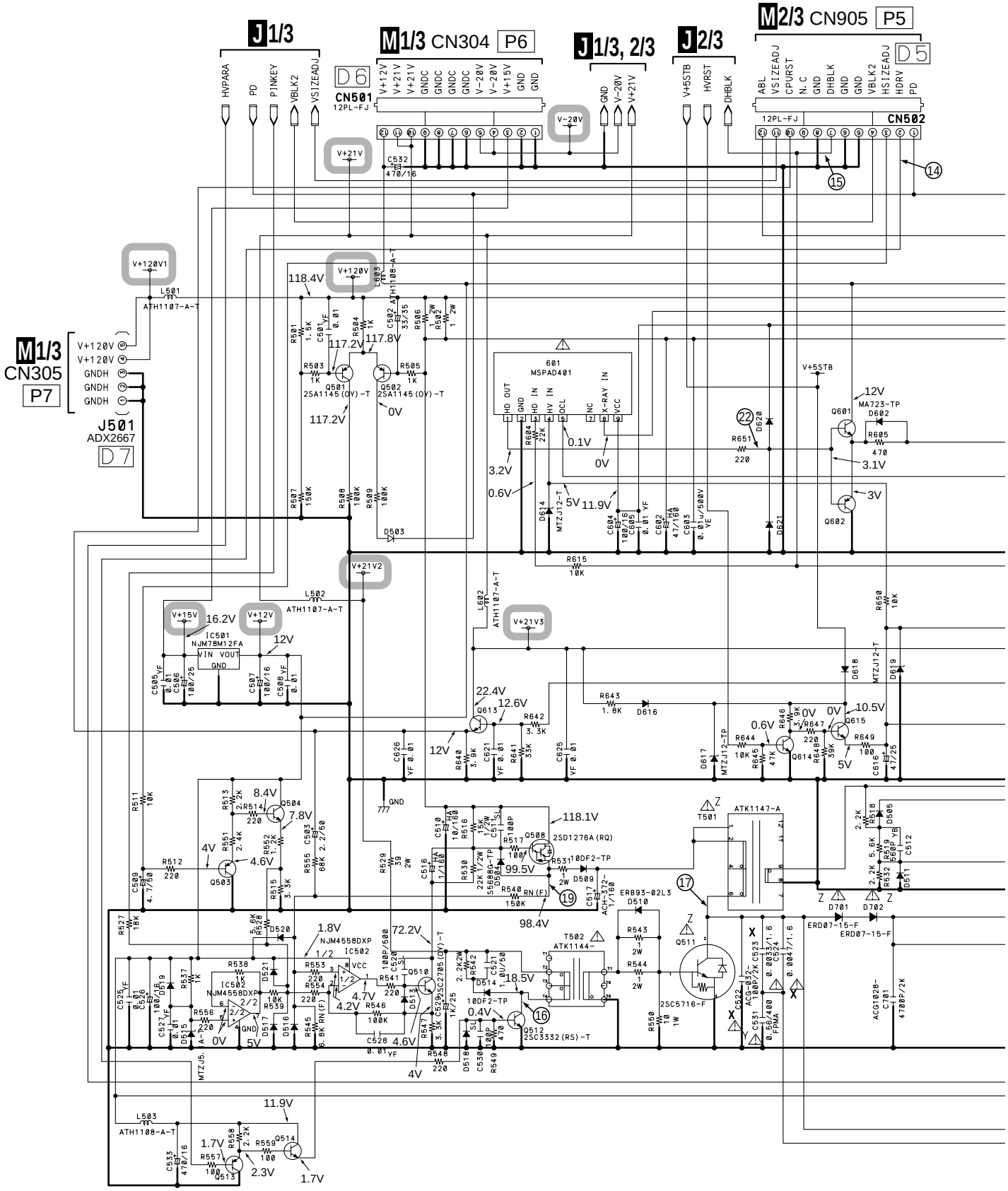

J 3/3 DEFLECTION SERVICE ASSY (AWV1909)

: The power supply is shown with the marked box.

● H. DEF, HV and DF BLOCK

The ⚠ mark found on same component parts of indicates the importance of the safety factor of the parts.
Therefore, when replacing, be sure to use parts of identical de-signation.

NOTE
RESISTORS Ω
RD1/4PU***J-T
1/2W RD1/2PM***J-T
1W RS1MMF***J-T
2W RS2MMF***J-T
CAPACITORS μF
VF CKCYF
CEAT
VB CKCYB
SL CCCSL
DIODE
1SS133-T
TRANSISTORS
2SC1740S(RS)-T
2SA933S(RS)-T

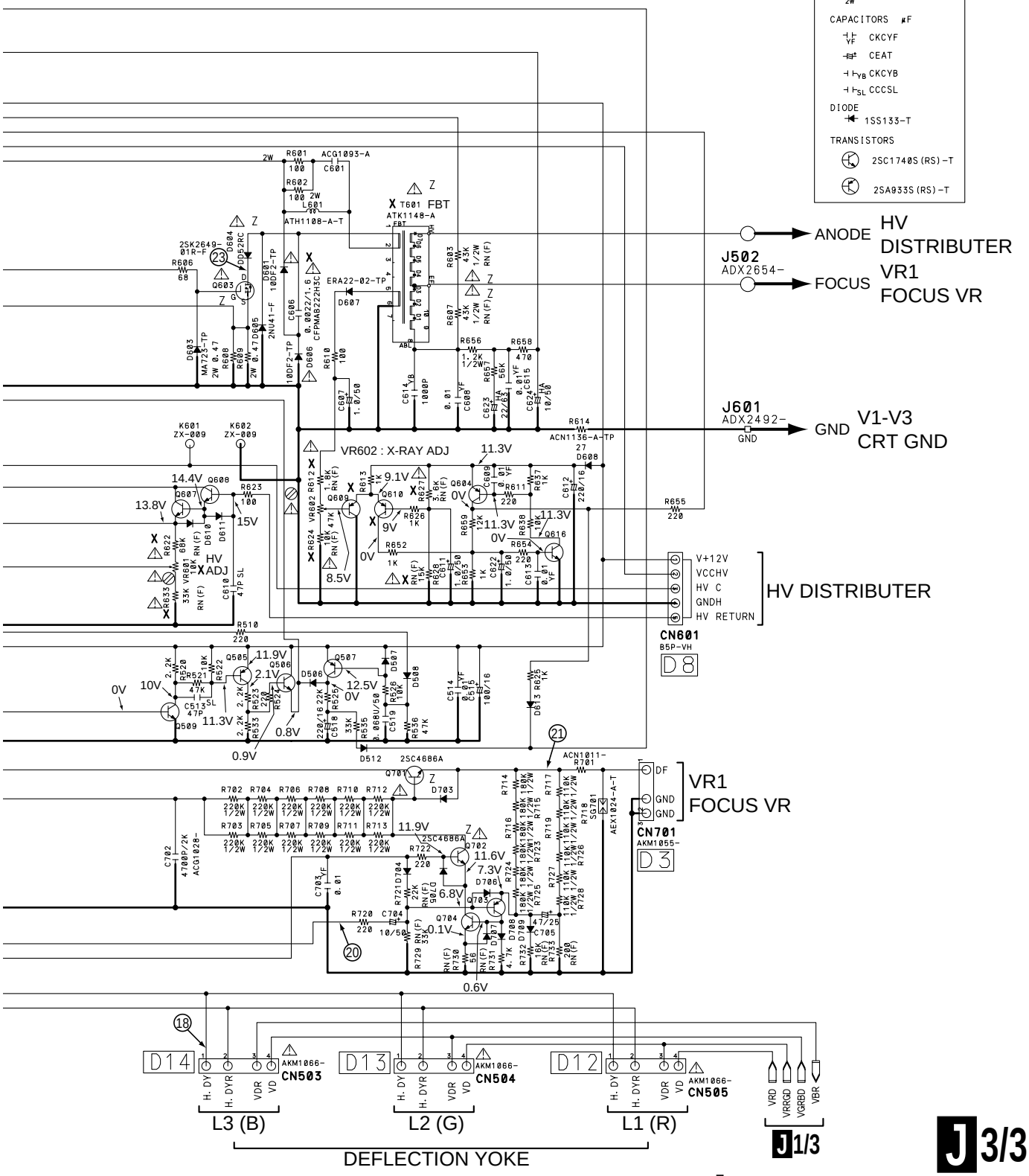

3.24 DIGITAL CONV. ASSY

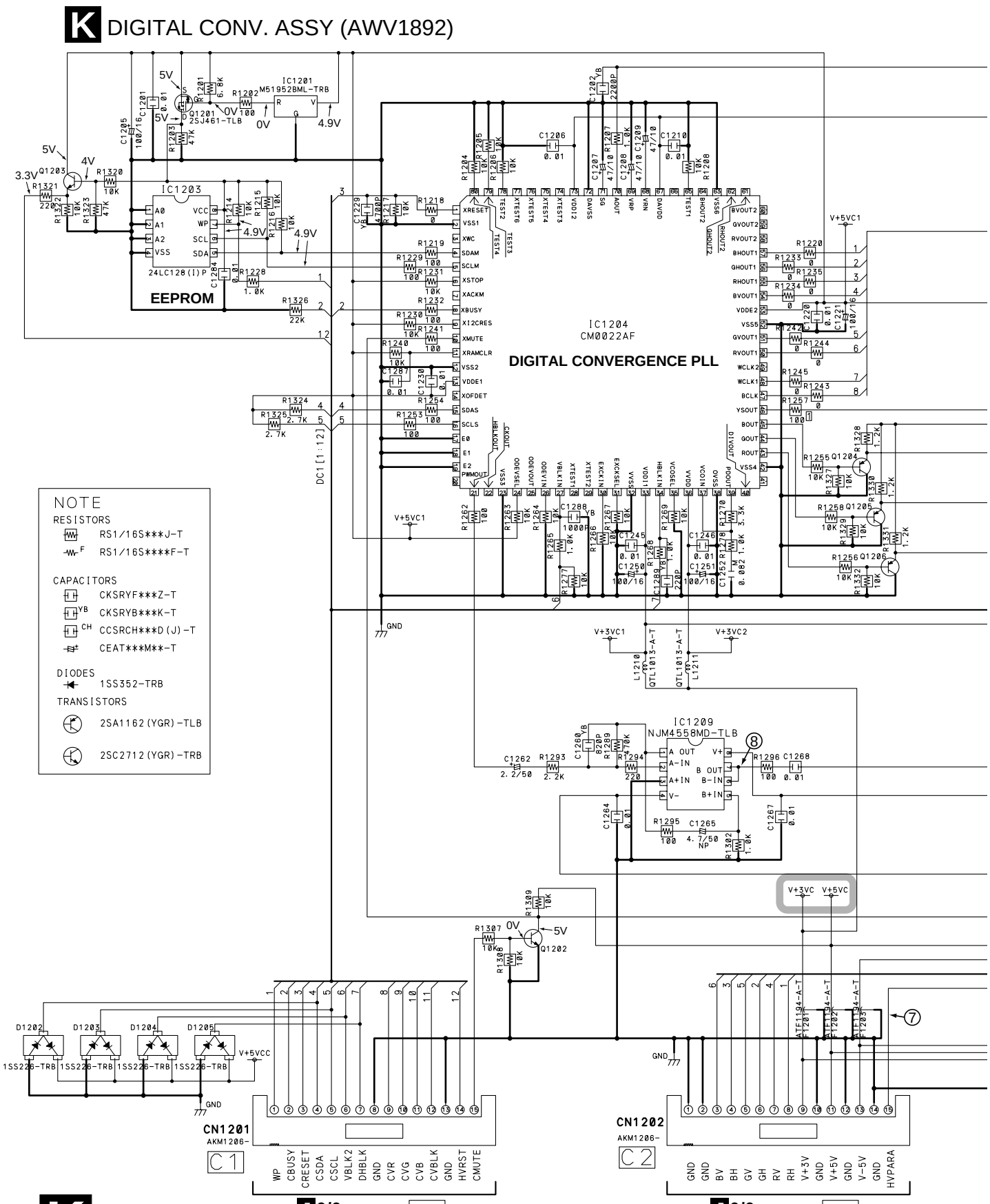

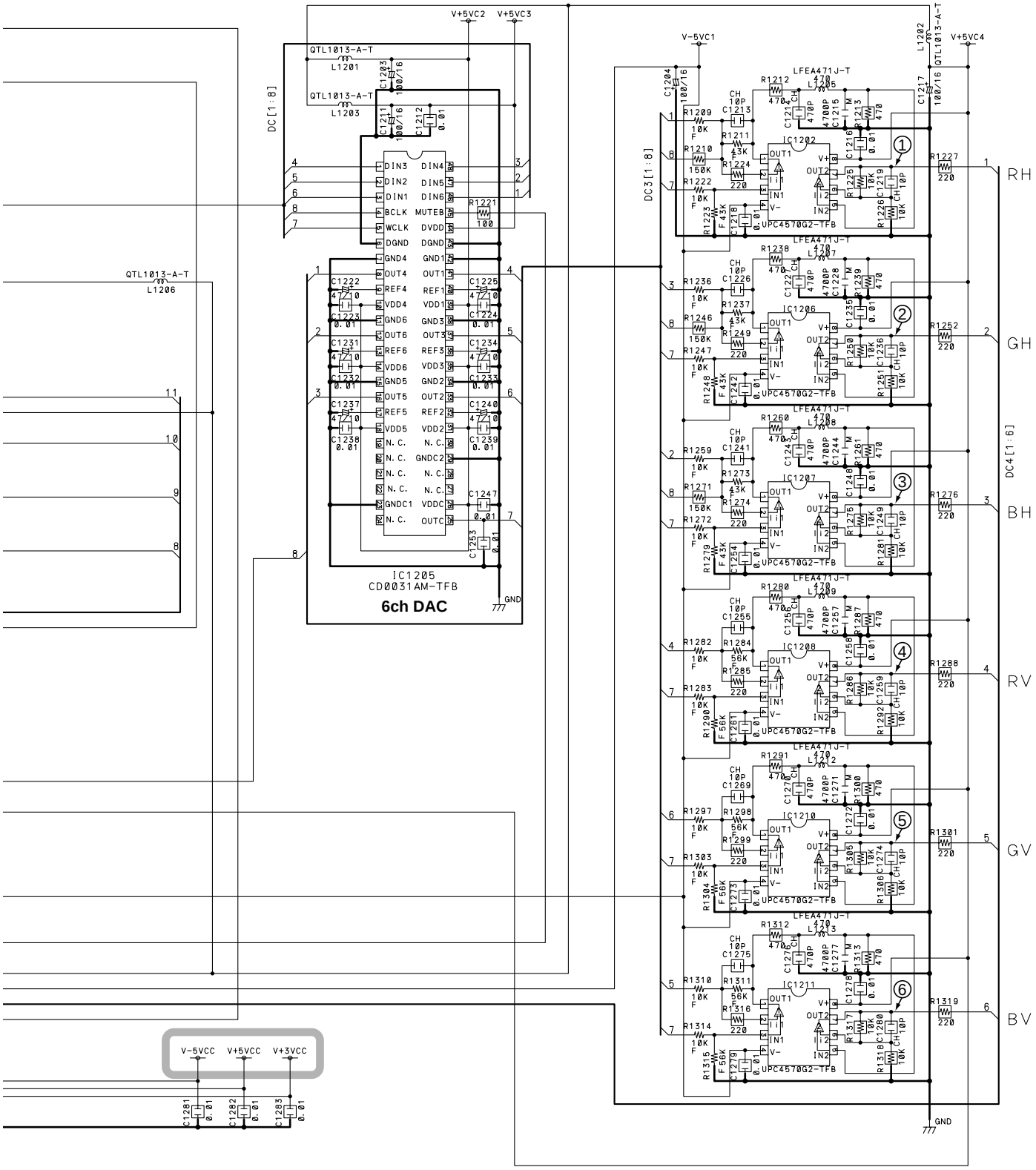

: The power supply is shown with the marked box.

3.25 POWER SW and POWER SUPPLY (1/3) ASSYS

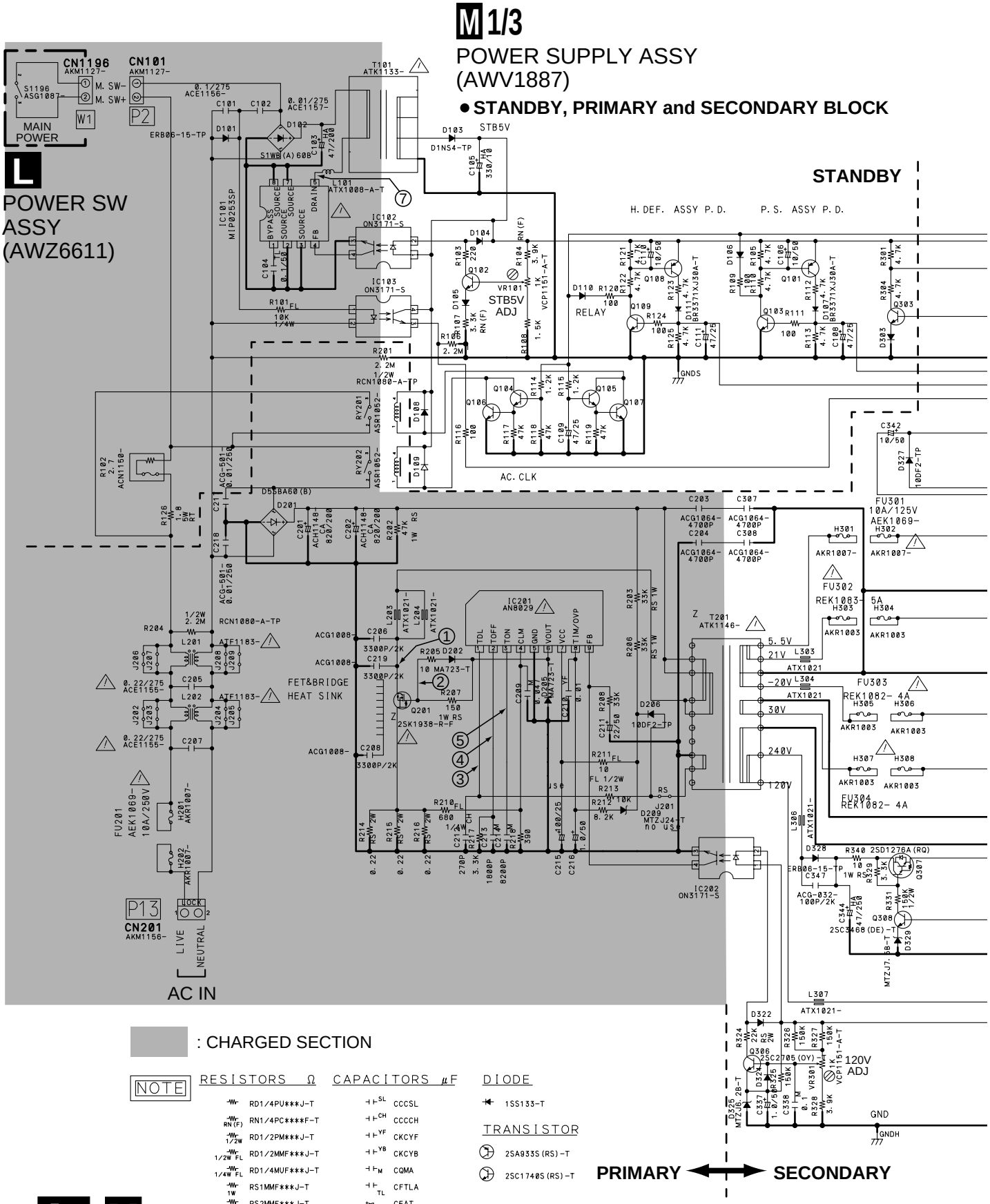

• NOTE FOR FUSE REPLACEMENT

CAUTION - FOR CONTINUED PROTECTION AGAINST RISK OF FIRE. REPLACE WITH SAME TYPE AND RATINGS ONLY.

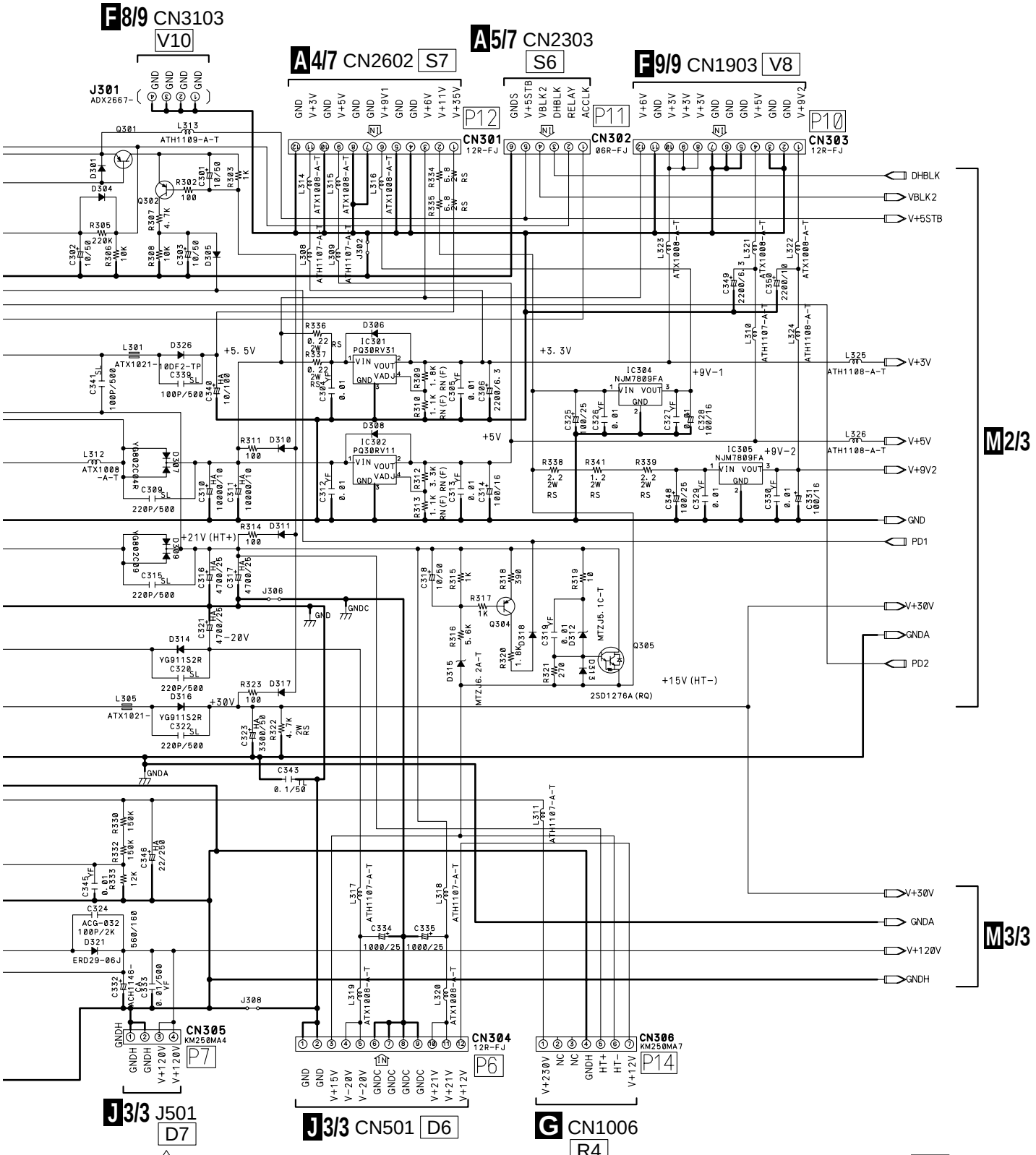

The ⚠ mark found on same component parts indicates the importance of the safety factor of the parts. Therefore, when replacing, be sure to use parts of identical designation.

M 1/3

3.26 POWER SUPPLY ASSY (2/3)

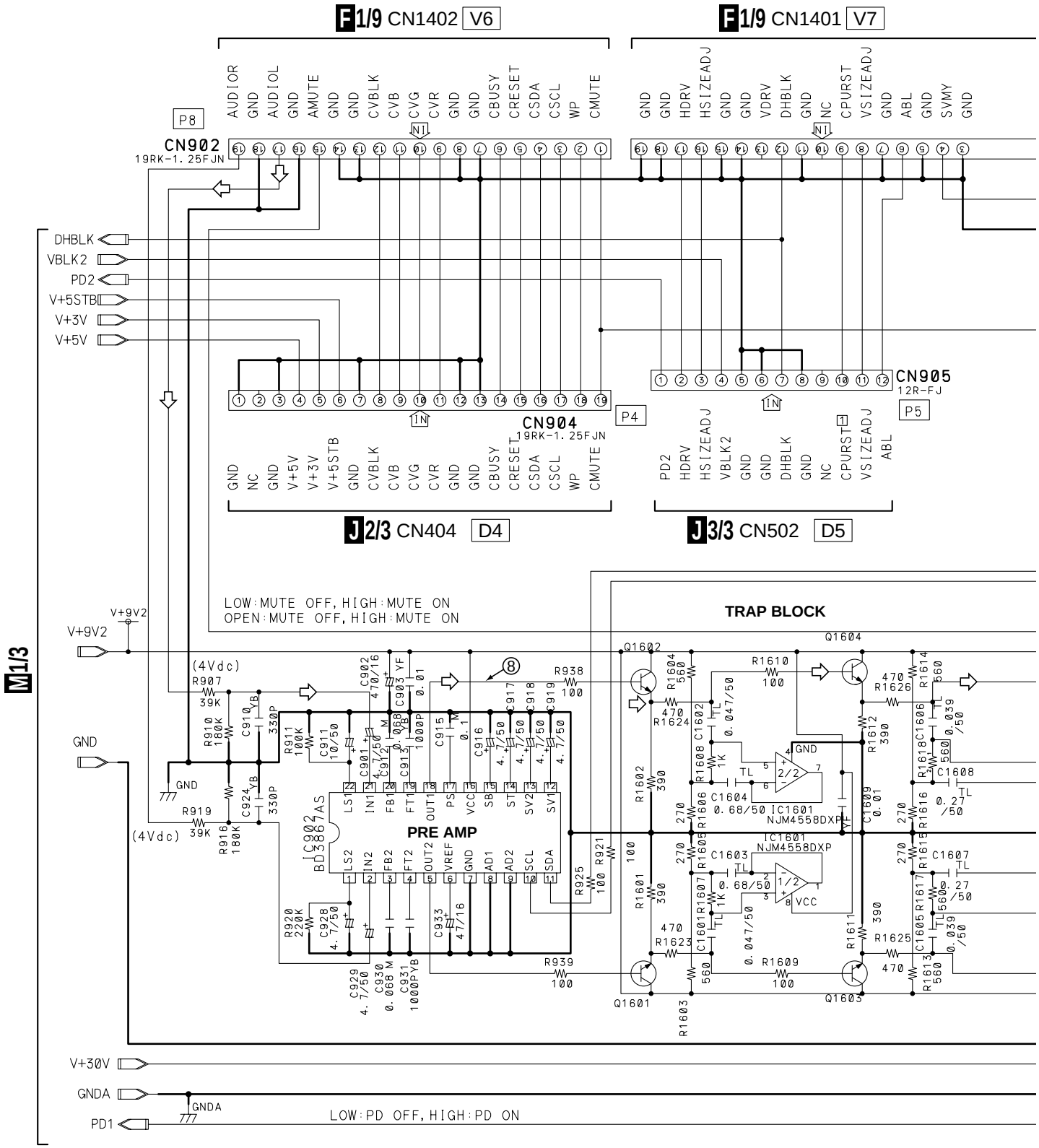

M 2/3

POWER SUPPLY ASSY (AWV1887)

● **AUDIO & EQ BLOCK**

⇨ : AUDIO SIGNAL ROUTE

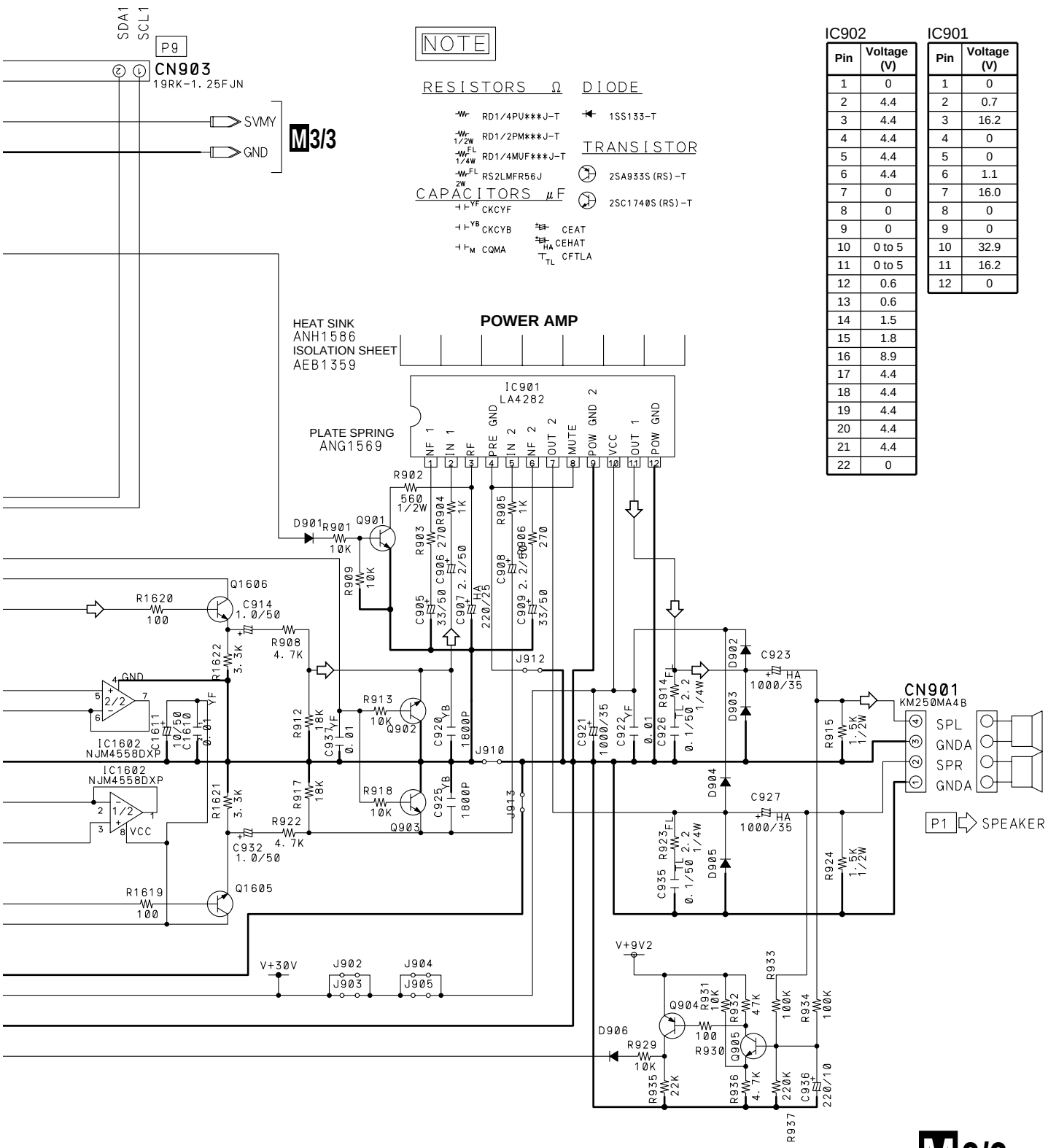

IC902

Pin	Voltage (V)
1	0
2	4.4
3	4.4
4	4.4
5	4.4
6	4.4
7	0
8	0
9	0
10	0 to 5
11	0 to 5
12	0.6
13	0.6
14	1.5
15	1.8
16	8.9
17	4.4
18	4.4
19	4.4
20	4.4
21	4.4
22	0

IC901

Pin	Voltage (V)
1	0
2	0.7
3	16.2
4	0
5	0
6	1.1
7	16.0
8	0
9	0
10	32.9
11	16.2
12	0

3.27 POWER SUPPLY ASSY (3/3)

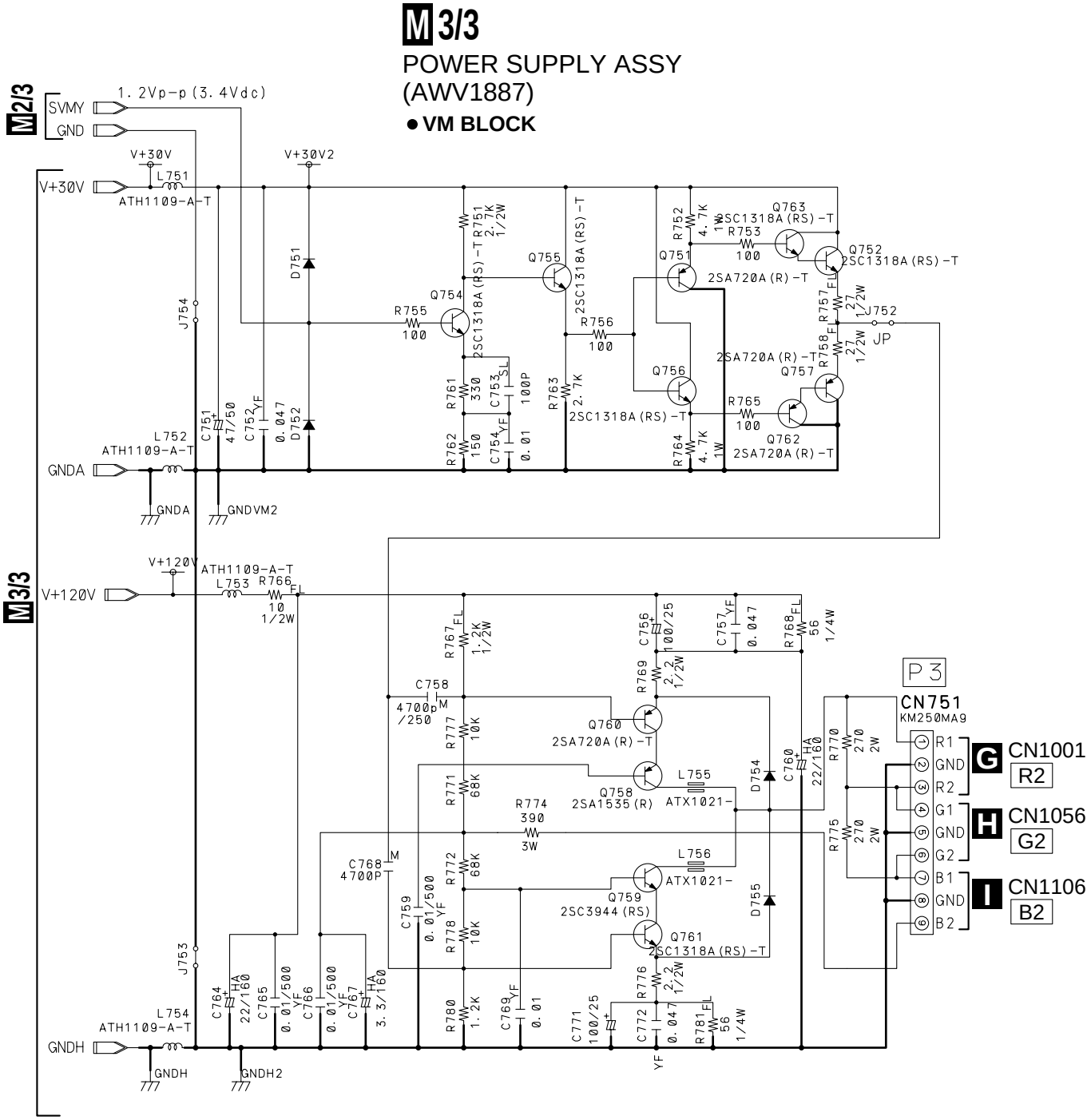

■ WAVEFORMS

Note : The encircled numbers denote measuring point in the schematic diagram.

A SIGNAL ASSY

Input Signal

Input : INPUT 1 (COMPOSITE)
Video Signal : EIA Color-bar
Picture Quality : STANDARD
Range : DC Range (Unless otherwise noted)

1 2101-pin 18 (VIDEO OUT)
V: 0.5V/div. H: 10µsec/div.
(Input : TUNER)

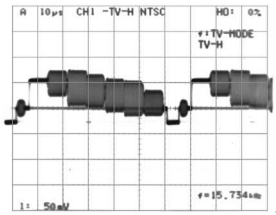

← GND

2 Q2108 Emitter (TV1V)
V: 1V/div. H: 10µsec/div.
(Input : TUNER)

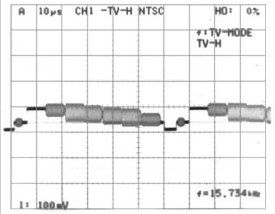

← GND

3 2101-pin 27 (L OUT)
V: 1V/div. H: 0.5msec/div.
(Input : TUNER)
1kHz 100% modulation

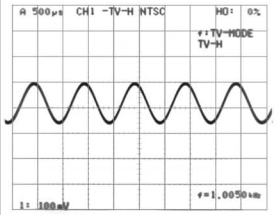

← GND

4 Foot of R2859 (MAIN Y)
IC2801-pin 39 (Y OUT)
V: 1V/div. H: 10µsec/div.
(Input : TUNER)

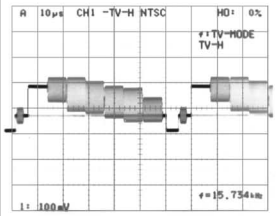

← GND

5 IC2801-pin 52 (LOUT 1)
V: 1V/div. H: 0.5µsec/div.
(Input : TUNER)
1kHz SIN wave (audio) 100% modulation

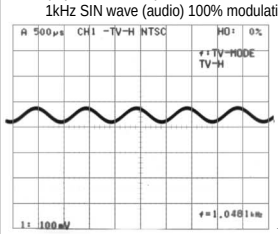

← GND

6 Foot of R2357 (YVM)
V: 1V/div. H: 10µsec/div.

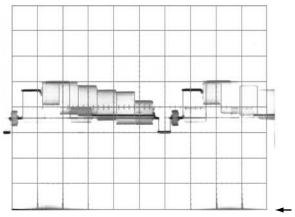

← GND

7 Q2505 Emitter (3DY)
V: 0.5V/div. H: 10µsec/div.

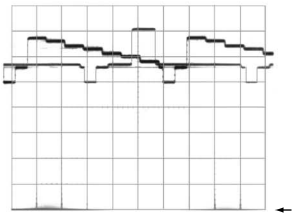

← GND

8 Foot of R2511 (3DC)
V: 0.5V/div. H: 10µsec/div.

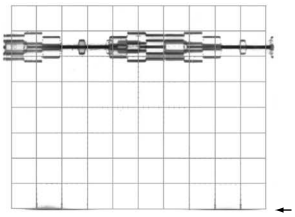

← GND

9 Foot of R2622 (MY)
V: 0.2V/div. H: 10µsec/div.
(Range : AC Range)

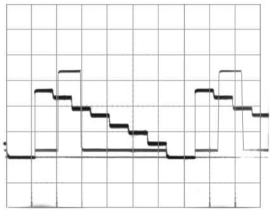

10 Foot of R2623 (MCB)
V: 0.2V/div. H: 10µsec/div.
(Range : AC Range)

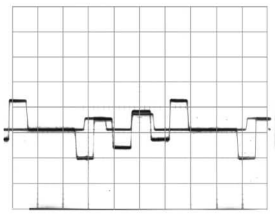

11 Foot of R2621 (MCR)
V: 0.2V/div. H: 10µsec/div.
(Range : AC Range)

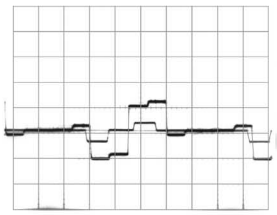

12 CN2601-pin 2 (MVSYNC)
V: 1V/div. H: 2msec/div.

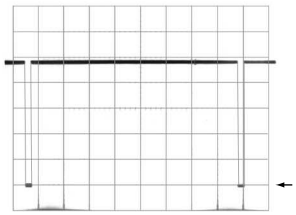

← GND

13 CN2601-pin 1 (MHSYNC)
V: 1V/div. H: 20µsec/div.

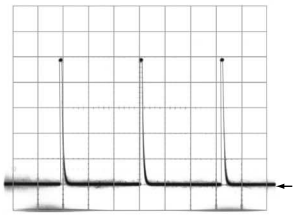

← GND

14 C2701- – terminal (YVS)
V: 1V/div. H: 10µsec/div.

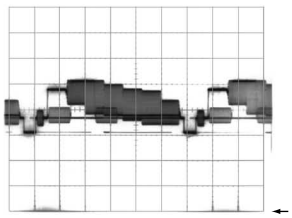

← GND

15 Q2705 Emitter (SY)
V: 0.2V/div. H: 10µsec/div.
(Range : AC Range)

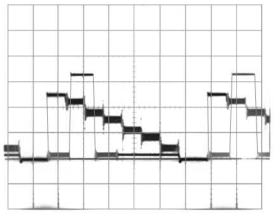

16 Foot of R2731 (SCB)
V: 0.2V/div. H: 10µsec/div.
(Range : AC Range)

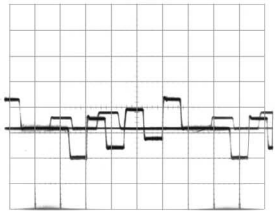

17 Foot of R2730 (SCR)
V: 0.2V/div. H: 10µsec/div.
(Range : AC Range)

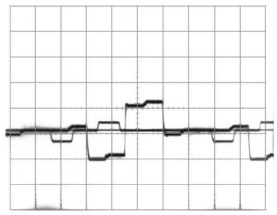

18 CN2603-pin 13 (SHSYNC)
V: 1V/div. H: 10µsec/div.

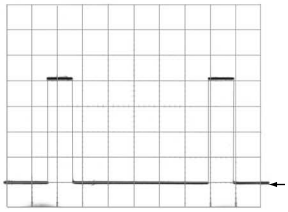

← GND

19 CN2603-pin 12 (SVSYNC)
V: 1V/div. H: 2msec/div.

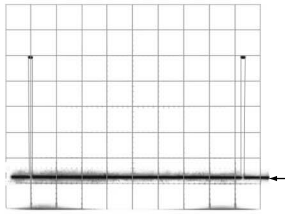

← GND

20 CN2603-pin 4 (MCCY)
V: 1V/div. H: 10µsec/div.

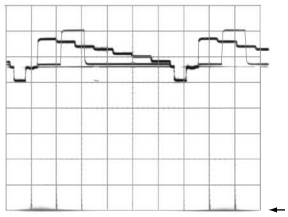

← GND

F VIDEO IP SERVICE ASSY

Input Signal (No.1-No.3)

Input	: INPUT 1 (COMPOSITE)
	: INPUT 2 (COMPOSITE)
Video Signal	: EIA Color-bar
Picture Quality	: STANDARD
Range	: AC Range
SPLIT	: ON

Input Signal (No.4-No.12)

Input	: INPUT 1 (COMPOSITE)
Video Signal	: EIA Color-bar
Picture Quality	: STANDARD
Range	: AC Range (Unless otherwise noted)

1 Q3120 Emitter (TY)
V: 0.2V/div. H: 10µsec/div.

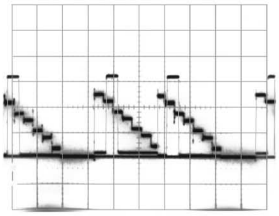

2 Q3115 Emitter (TB_Y)
V: 0.2V/div. H: 10µsec/div.

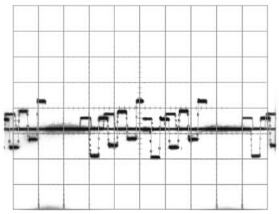

3 Q3110 Emitter (TR_Y)
V: 0.2V/div. H: 10µsec/div.

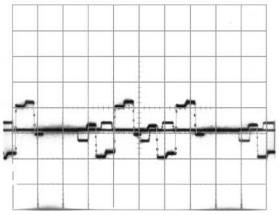

4 Q3119 Emitter (YTP)
V: 0.2V/div. H: 10µsec/div.

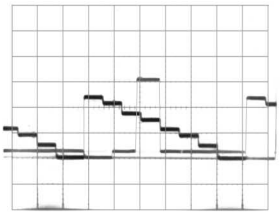

5 Q3114 Emitter (CBTP)
V: 0.2V/div. H: 10µsec/div.

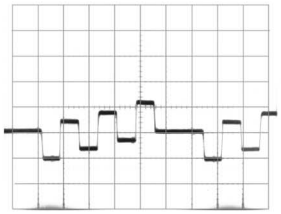

6 Q3109 Emitter (CRTP)
V: 0.2V/div. H: 10µsec/div.

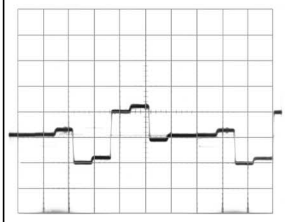

7 Foot of R1981 (DY)
V: 0.2V/div. H: 5µsec/div.

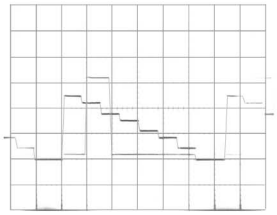

8 Foot of C1931 (DPB)
V: 0.2V/div. H: 5µsec/div.

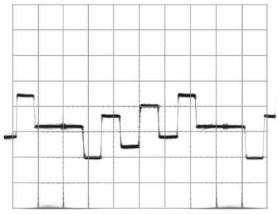

9 Foot of C1932 (DPR)
V: 0.2V/div. H: 5µsec/div.

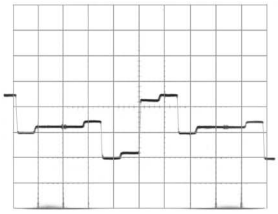

10 K1901 (ROUT)
V: 1V/div. H: 5µsec/div.
(Range : DC Range)

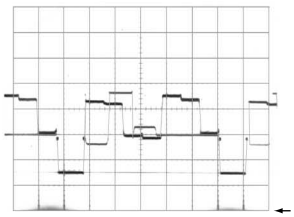

11 K1902 (GOUT)
V: 1V/div. H: 5µsec/div.
(Range : DC Range)

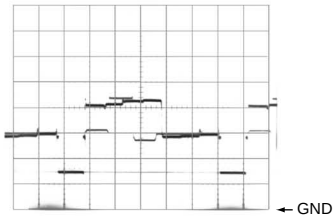

12 K1903 (BOUT)
V: 1V/div. H: 5µsec/div.
(Range : DC Range)

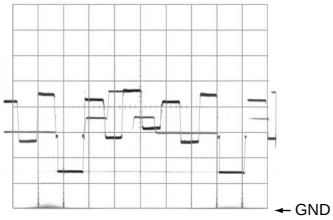

J DEFLECTION ASSY

Input Signal (No.1-No.13)
Input : INPUT 1 (COMPOSITE)
Video Signal : EIA Color-bar
Picture Quality : STANDARD

Input Signal (No.14-No.23)
Input : INPUT 1 (COMPOSITE)
Video Signal : EIA Color-bar
Picture Quality : STANDARD
Display Mode : FULL

1 IC801-pin 4 (V1)
V: 1V/div. H: 5msec/div.

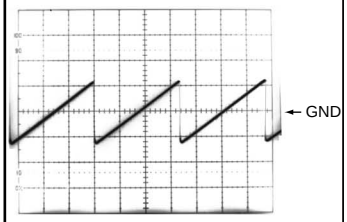

6 IC802-pin 7 (VD IN)
V: 0.5V/div. H: 5msec/div.

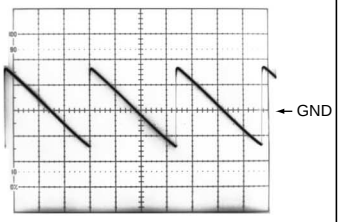

11 CN402-pin 3 (GH)
V: 5V/div. H: 5msec/div.

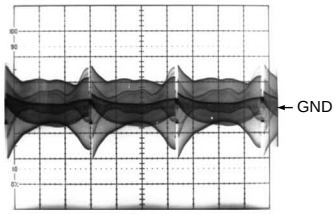

17 Q511 Collector
V: 200V/div. H: 5µsec/div.

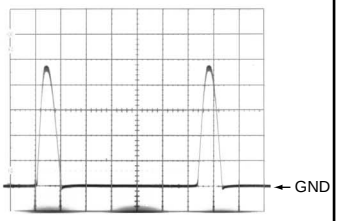

2 IC801-pin 5 (V2)
V: 1V/div. H: 5msec/div.

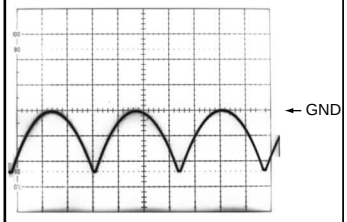

7 IC805-pin 3 (PIN KEY)
V: 0.5V/div. H: 5msec/div.

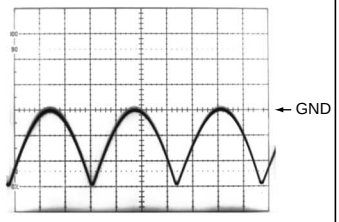

12 CN403-pin 1 (BV)
V: 5V/div. H: 5msec/div.

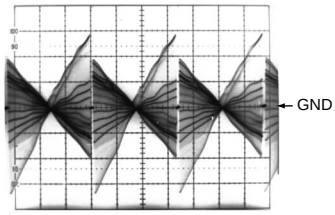

18 CN503-pin 1 (H. DY)
V: 20V/div. H: 5µsec/div.

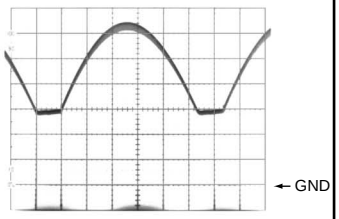

3 IC801-pin 6 (V3)
V: 1V/div. H: 5msec/div.

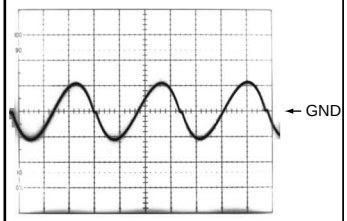

8 CN401-pin 1 (RV)
V: 5V/div. H: 5msec/div.

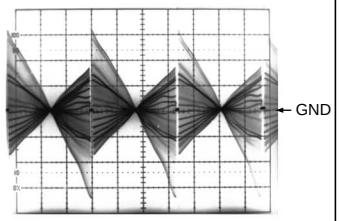

13 CN403-pin 3 (BH)
V: 5V/div. H: 5msec/div.

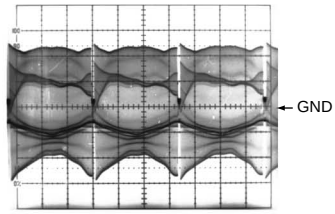

19 Q508 Emitter
V: 20V/div. H: 5msec/div.

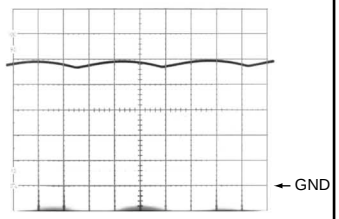

4 IC801-pin 7 (V4)
V: 1V/div. H: 5msec/div.

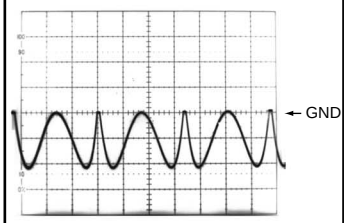

9 CN401-pin 3 (RH)
V: 5V/div. H: 5msec/div.

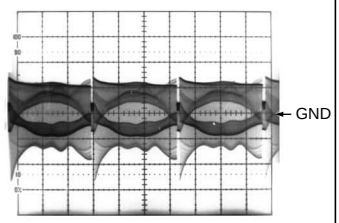

14 CN502-pin 2 (HDRV)
V: 2V/div. H: 5µsec/div.
15 CN502-pin 7 (DHBLK)
V: 2V/div. H: 5µsec/div.

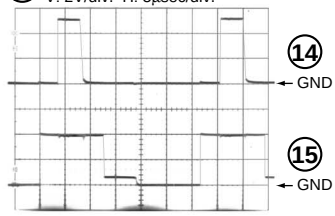

20 Foot of R720 (HVPARA)
V: 0.5V/div. H: 5msec/div.

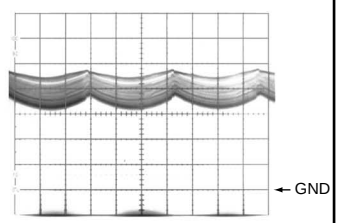

5 IC802-pin 5 (VD OUT)
V: 10V/div. H: 5msec/div.

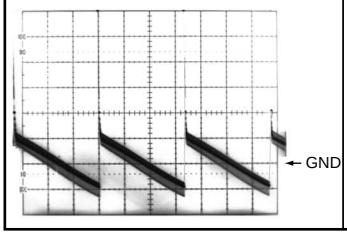

10 CN402-pin 1 (GV)
V: 5V/div. H: 5msec/div.

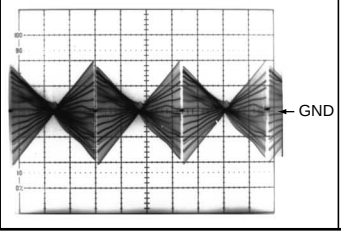

16 Q512 Collector
V: 10V/div. H: 5µsec/div.

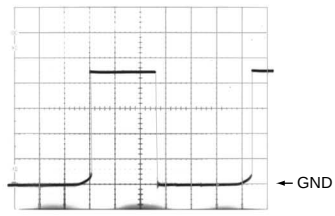

21 Q701 Emitter (DF)
V: 200V/div. H: 5msec/div.

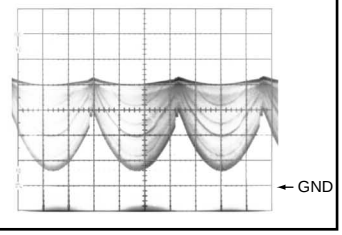

K DIGITAL CONV. ASSY

Input Signal

Input	: INPUT 1 (COMPOSITE)
Video Signal	: EIA Color-bar
Picture Quality	: STANDARD
Display Mode	: FULL

22 Q601 Base (HD)
V: 2V/div. H: 5µsec/div.

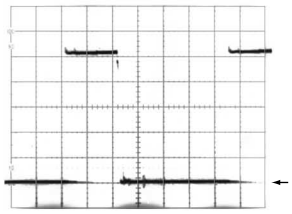

23 Q603 Drain
V: 100V/div. H: 5µsec/div.

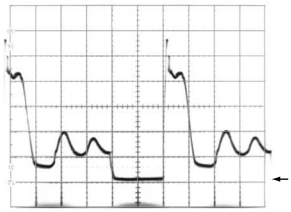

1 IC1202-pin 7 (RH OUT)
V: 1V/div. H: 5msec/div.

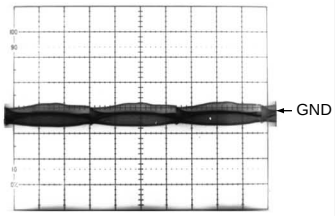

2 IC1206-pin 7 (GH OUT)
V: 1V/div. H: 5msec/div.

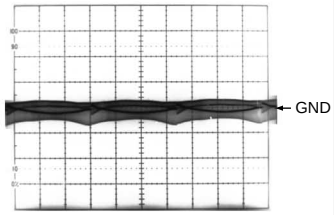

3 IC1207-pin 7 (BH OUT)
V: 1V/div. H: 5msec/div.

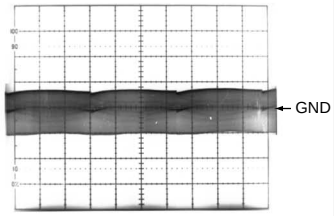

4 IC1208-pin 7 (RV OUT)
V: 1V/div. H: 5msec/div.

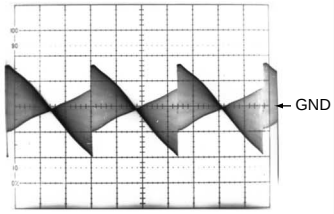

5 IC1210-pin 7 (GV OUT)
V: 1V/div. H: 5msec/div.

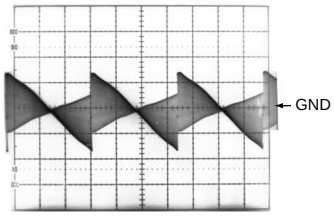

6 IC1211-pin 7 (BV OUT)
V: 1V/div. H: 5msec/div.

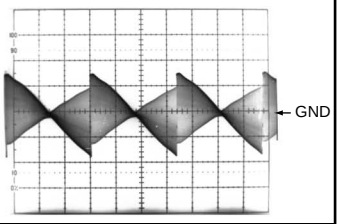

7 CN1202-pin 15 (HV PARA)
V: 0.5V/div. H: 5msec/div.

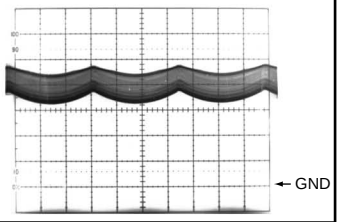

8 IC1209-pin 7 (H PULSE CANCEL)
V: 0.5V/div. H: 10µsec/div.

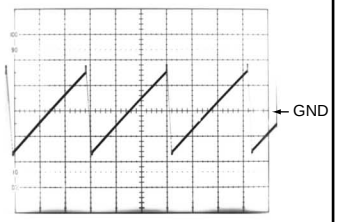

M POWER SUPPLY ASSY

Input Signal

Input : INPUT 1 (COMPOSITE)
Video Signal : EIA Color-bar
Picture Quality : STANDARD
Display Mode : FULL
Range : DC Range (Unless otherwise noted)

1 Q201 Drain
V: 100V/div. H: 10µsec/div.

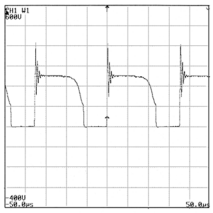

← GND

2 Q201 Gate
V: 5V/div. H: 10µsec/div.

← GND

3 IC201-pin 1
V: 1V/div. H: 10µsec/div.

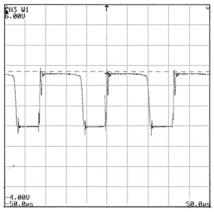

← GND

4 IC201-pin 2
V: 0.5V/div. H: 10µsec/div.

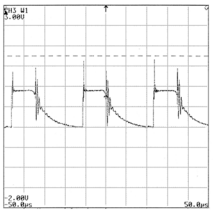

← GND

5 IC201-pin 3
V: 0.5V/div. H: 10µsec/div.

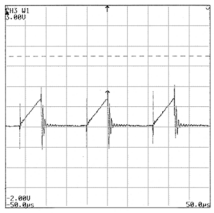

← GND

6 IC201-pin 6
V: 5V/div. H: 10µsec/div.

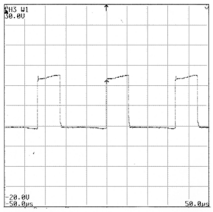

← GND

7 IC101-pin 5
V: 100V/div. H: 50µsec/div.

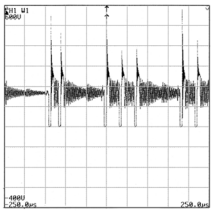

← GND

8 IC902-pin 18
V: 1V/div. H: 0.5msec/div.
1kHz SIN Wave (Audio) 100% modulation
(INPUT : TUNER, VOL : MAX)

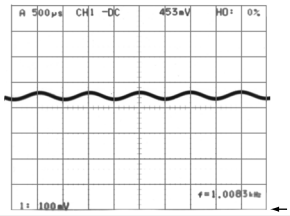

← GND

VOLTAGES

Input Signal

Input : INPUT 1 (COMPOSITE)
Video Signal : EIA Color-bar
Picture Quality : STANDARD

A SIGNAL ASSY

2101 (TV FRONT-END SYSTEM UNIT)

Pin	Pin	Voltage (V)
1	AGC	3.1
2	TU	–
3	ADRS	–
4	SCL	–
5	SDA	–
6	NC	–
7	V SUPPLY	5.0
8	NC	–
9	BTL	30.0
10	NC	–
11	IF1	–
12	TP	–
13	BV	9.0
14	TP	–
15	GND	0
16	AFT	2.6
17	AGC OUT	–
18	VIDEO OUT	2.7
19	NC	–
20	GND	0
21	ST	4.9
22	ASP	4.9
23	MODE	0
24	F MONO	0
25	MUTE	–
26	R OUT	4.1
27	L OUT	4.1

2201 (TV FRONT-END SYSTEM UNIT)

Pin	Pin	Voltage (V)
1	AGC	2.7
2	TU	–
3	ADRS	5.0
4	SCL	–
5	SDA	–
6	NC	–
7	VCC	5.0
8	NC	–
9	BTL	30.0
10	NC	–
11	IF1	–
12	TP	–
13	BV	9.0
14	AUDIO	–
15	GND	0
16	AF1	2.6
17	AGC OUT	–
18	VIDEO OUT	2.2
19	NC	–
20	GND	0
21	NC	–
22	NC	–
23	NC	–
24	NC	–
25	NC	–
26	NC	–
27	NC	–

IC2302

Pin	Voltage (V)	Pin	Voltage (V)
1	0	27	5.0
2	0 to 5	28	0 to 5
3	5.0	29	0
4	4.9	30	5.0
5	2.1	31	0
6	2.1	32	5.0
7	3.8	33	0
8	3.4	34	0
9	5.0	35	0
10	0	36	5.0
11	0	37	0 to 5
12	0 to 5	38	5.0
13	0 to 5	39	0 to 5
14	5.0	40	0
15	5.0	41	0
16	4.9	42	0
17	0	43	0 to 5
18	5.0	44	0
19	1.7	45	0 to 5
20	1.7	46	0 to 5
21	0	47	0 to 5
22	2.3	48	0 to 5
23	0	49	5.0
24	0 to 5	50	0
25	0 to 5	51	5.0
26	0	52	0

IC2401

Pin	Voltage (V)	Pin	Voltage (V)	Pin	Voltage (V)	Pin	Voltage (V)
1	0	17	4.9	33	0	49	0
2	4.9	18	0 to 5	34	0	50	0
3	0.0	19	0 to 5	35	4.9	51	0 to 5
4	07 to 4.2	20	4.9	36	0	52	0 to 5
5	0	21	0	37	0	53	0
6	4.9	22	0.7 to 4.2	38	0	54	4.0
7	4.9	23	0	39	0	55	0
8	0	24	0	40	0	56	4.9
9	0	25	4.9	41	0	57	4.9
10	0	26	0.06	42	0	58	4.9
11	4.9	27	0.07	43	0	59	4.9
12	0	28	0.08	44	0	60	4.9
13	0 to 5	29	0.06	45	0	61	0
14	0 to 5	30	0.06	46	0	62	0
15	0 to 5	31	0	47	0	63	0
16	0	32	0	48	0	64	4.9

IC2402

Pin	Voltage (V)
1	0 to 5
2	0 to 5
3	0 to 5
4	0 to 5
5	0 to 5
6	0 to 5
7	0
8	0 to 5
9	0 to 5
10	0 to 5
11	0 to 5
12	4.9
13	0
14	4.9

IC2403

Pin	Voltage (V)
1	0 to 5
2	0 to 5
3	0 to 5
4	0 to 5
5	0 to 5
6	0 to 5
7	0 to 5
8	0
9	0 to 5
10	0.7 to 4.2
11	0
12	0 to 5
13	0 to 5
14	0 to 5
15	0 to 5
16	4.9

IC2404

Pin	Voltage (V)
1	4.9
2	4.9
3	2.1
4	0 to 5
5	0 to 5
6	1.9
7	0
8	0
9	0
10	0
11	0
12	1.9
13	3.2
14	4.9

IC2703

Pin	Voltage (V)
1	4.5
2	0
3	3.8
4	0
5	3.8
6	3.8
7	0
8	4.5
9	4.5
10	0
11	4.5
12	0
13	8.9
14	4.5
15	0
16	4.5

IC2501

Pin	Voltage (V)	Pin	Voltage (V)	Pin	Voltage (V)	Pin	Voltage (V)
1	0	26	0 to 5	51	0	76	0 to 3.3
2	0 to 5	27	0 to 5	52	0	77	0
3	0 to 5	28	0 to 5	53	3.2	78	0
4	0 to 5	29	0	54	0	79	0
5	0 to 5	30	1.5	55	0	80	0
6	0 to 5	31	1.5	56	0	81	3.2
7	0 to 5	32	3.2	57	5.0	82	1.0
8	0 to 5	33	0	58	0	83	1.6
9	0 to 5	34	0	59	0 to 5	84	1.6
10	0 to 5	35	0	60	0 to 5	85	1.0
11	0 to 5	36	0	61	0	86	0
12	0 to 5	37	0	62	0	87	0
13	0 to 5	38	0	63	0	88	1.1
14	0 to 5	39	0	64	3.2	89	0.7
15	0 to 5	40	0	65	0	90	0.9
16	0 to 5	41	0	66	0	91	1.5
17	0 to 5	42	0	67	0	92	3.2
18	0 to 5	43	0	68	0	93	3.2
19	0 to 5	44	0	69	0	94	3.2
20	0 to 5	45	3.2	70	0	95	3.2
21	0 to 5	46	3.2	71	0	96	0
22	0 to 5	47	1.7	72	0	97	0
23	0 to 5	48	0	73	0	98	0 to 5
24	0 to 5	49	0	74	0	99	0 to 5
25	0 to 5	50	1.4	75	0	100	3.2

IC2503

Pin	Voltage (V)	Pin	Voltage (V)
1	4.9	21	0
2	0 to 5	22	0 to 5
3	0 to 5	23	0 to 5
4	0 to 5	24	0 to 5
5	0 to 5	25	0 to 5
6	4.9	26	0 to 5
7	0 to 5	27	0 to 5
8	0 to 5	28	0 to 5
9	0 to 5	29	0 to 5
10	0 to 5	30	–
11	–	31	0 to 5
12	–	32	0 to 5
13	–	33	0 to 5
14	–	34	0 to 5
15	–	35	0
16	0 to 5	36	0 to 5
17	0 to 5	37	0 to 5
18	0 to 5	38	0 to 5
19	0 to 5	39	0 to 5
20	4.9	40	0

IC2601

Pin	Voltage (V)	Pin	Voltage (V)
1	4.0	25	5.6
2	4.0	26	5.6
3	4.0	27	5.6
4	2.1	28	0
5	0	29	5.7
6	1.8	30	5.6
7	5.9	31	5.5
8	2.6	32	4.8
9	0 to 9	33	0 to 5
10	7.3	34	0 to 5
11	0	35	0
12	5.8	36	0
13	0 to 5	37	2.1
14	0 to 5	38	3.3
15	0 to 8	39	0.1
16	0	40	2.7
17	0 to 5	41	4.9
18	8.9	42	4.9
19	8.9	43	0
20	4.3	44	3.1
21	4.3	45	0
22	4.3	46	3.7
23	0	47	2.3
24	0	48	2.4

IC2702

Pin	Voltage (V)	Pin	Voltage (V)
1	2.3	21	5.6
2	4.2	22	5.6
3	8.9	23	5.6
4	1.7	24	5.6
5	0	25	8.9
6	3.0	26	2.4
7	3.0	27	3.0
8	3.0	28	3.0
9	8.9	29	5.3
10	0.9	30	1.5
11	4.1	31	0
12	4.3	32	3.5
13	4.2	33	4.0
14	0 to 5	34	4.3
15	0 to 5	35	0
16	0 to 5	36	0 to 5
17	0	37	0 to 5
18	3.2	38	3.4
19	2.9	39	2.5
20	2.9	40	2.5

IC2801

Pin	Voltage (V)	Pin	Voltage (V)	Pin	Voltage (V)	Pin	Voltage (V)
1	4.3	17	3.9	33	0 to 5	49	4.0
2	4.4	18	4.4	34	0 to 5	50	4.4
3	3.9	19	4.4	35	0	51	4.3
4	4.4	20	0	36	0	52	4.4
5	4.4	21	4.8	37	4.3	53	4.5
6	0	22	3.9	38	4.1	54	4.4
7	4.8	23	4.4	39	4.4	55	3.0
8	3.9	24	3.9	40	4.1	56	4.0
9	4.4	25	4.4	41	4.5	57	0
10	3.9	26	4.4	42	8.8	58	4.2
11	4.4	27	0	43	4.3	59	0.4
12	4.4	28	4.9	44	0	60	5.1
13	0	29	0	45	4.9	61	0.4
14	4.9	30	0	46	0	62	4.4
15	3.9	31	0	47	0	63	5.2
16	4.4	32	0	48	0	64	4.4

IC2802

Pin	Voltage (V)
1	1.9
2	3.3
3	1.9
4	0
5	1.9
6	1.9
7	3.3
8	1.9
9	1.9
10	0
11	1.9
12	3.3
13	4.9
14	1.9
15	0
16	1.9

IC2804

Pin	Voltage (V)
1	4.5
2	0.1
3	3.8
4	0
5	3.8
6	3.8
7	0.1
8	4.5
9	4.5
10	0
11	4.5
12	0.1
13	8.9
14	4.5
15	0
16	4.5

F VIDEO IP SERVICE ASSY

IC3901

Pin	Voltage (V)
1	0
2	0
3	3.1
4	2.7
5	0
6	2.3
7	2.5
8	2.3
9	2.5
10	2.4
11	0.3
12	0.2
13	0.2
14	0.2
15	4.9
16	4.9
17	0.2
18	0
19	0
20	2.9

IC3902

Pin	Voltage (V)
1	0
2	4.9
3	4.9
4	0
5	4.9
6	0
7	4.9
8	0
9	4.8
10	0
11	4.2
12	0
13	4.9
14	4.7
15	0.0
16	4.9

IC3903

Pin	Voltage (V)
1	2.7
2	2.6
3	2.6
4	2.6
5	4.9
6	4.9
7	0
8	0
9	0
10	0
11	0
12	0
13	0.1
14	4.9

IC1401

Pin	Voltage (V)	Pin	Voltage (V)
1	0 to 5	33	4.9
2	0 to 5	34	2.1
3	4.9	35	2.5
4	4.9	36	6.8
5	0	37	4.9
6	0	38	0
7	0	39	0
8	4.9	40	0
9	0	41	0
10	4.9	42	4.9
11	4.9	43	0 to 5
12	1.4	44	0
13	4.9	45	4.9
14	4.9	46	0
15	1.5	47	0 to 5
16	0	48	0
17	4.9	49	0
18	0	50	0 to 5
19	0	51	4.9
20	0	52	0
21	0	53	0
22	0	54	0 to 5
23	4.9	55	0 to 5
24	4.9	56	0 to 5
25	1.8	57	0 to 5
26	0	58	4.9
27	0.2	59	0 to 5
28	2.2	60	0 to 5
29	0	61	0
30	0 to 5	62	0
31	0 to 5	63	0
32	0	64	0

IC1902

Pin	Voltage (V)	Pin	Voltage (V)
1	1.1	29	1.9
2	5.1	30	0 to 4.9
3	5Vpp	31	0 to 4.9
4	5Vpp	32	0
5	5Vpp	33	3.9Vpp
6	0	34	3.9Vpp
7	0	35	3.9Vpp
8	4.9Vpp	36	0.5
9	4.9Vpp	37	3.9Vpp
10	4.9Vpp	38	3.9Vpp
11	6.8	39	3.9Vpp
12	0 to 5	40	8.8
13	0 to 5	41	2.4Vpp
14	2.0	42	2.4Vpp
15	0	43	2.4Vpp
16	0	44	0
17	–	45	8.8
18	–	46	4.6
19	8.8	47	4.6
20	6.4	48	4.4
21	–	49	0
22	6.1	50	0
23	2.4	51	0
24	0.3 to 4.7	52	0
25	0	53	5.7
26	0 to 4.8	54	4.2
27	0 to 4.9	55	8.8
28	0.1	56	5.3

IC3004

Pin	Voltage (V)	Pin	Voltage (V)
1	3.2	21	0
2	0 to 3.3	22	0 to 3.3
3	0 to 3.3	23	0 to 3.3
4	0 to 3.3	24	0 to 3.3
5	0 to 3.3	25	0 to 3.3
6	3.2	26	0 to 3.3
7	0 to 3.3	27	0 to 3.3
8	0 to 3.3	28	0 to 3.3
9	0 to 3.3	29	0 to 3.3
10	0 to 3.3	30	–
11	–	31	0 to 3.3
12	–	32	0 to 3.3
13	0 to 3.3	33	0 to 3.3
14	0 to 3.3	34	0 to 3.3
15	–	35	0
16	0 to 3.3	36	0 to 3.3
17	0 to 3.3	37	0 to 3.3
18	0 to 3.3	38	0 to 3.3
19	0 to 3.3	39	0 to 3.3
20	3.2	40	0

IC3104

Pin	Voltage (V)
1	4.3
2	4.3
3	4.3
4	4.3
5	4.2
6	0
7	0
8	0
9	8.8
10	8.8
11	8.8
12	5.2
13	5.1
14	5.1
15	4.3
16	8.9

IC3003

Pin	Voltage (V)	Pin	Voltage (V)	Pin	Voltage (V)	Pin	Voltage (V)
1	0	45	2.7	89	0	133	3.3
2	0 to 3.3	46	0	90	0	134	5.0
3	0 to 3.3	47	1.6	91	0	135	0 to 5
4	0 to 3.3	48	3.3	92	0	136	0 to 5
5	3.3	49	1.6	93	0	137	3.3
6	0	50	1.6	94	0	138	0
7	0	51	1.6	95	0	139	0 to 3.3
8	3.3	52	0	96	0	140	0 to 3.3
9	3.3	53	1.6	97	0	141	0 to 3.3
10	3.3	54	3.3	98	0	142	0 to 3.3
11	3.3	55	0.6	99	0	143	3.3
12	3.3	56	2.8	100	0	144	0 to 3.3
13	3.3	57	0	101	0	145	0 to 3.3
14	3.3	58	3.3	102	0	146	0
15	3.3	59	0.7	103	0	147	0 to 3.3
16	0	60	0.7	104	0	148	0 to 3.3
17	0	61	0	105	3.3	149	0 to 3.3
18	0	62	1.2	106	0	150	3.3
19	0	63	3.3	107	0	151	0 to 3.3
20	0	64	0.6	108	–	152	0 to 3.3
21	0	65	2.7	109	–	153	0
22	0 to 3.3	66	0	110	0	154	0
23	0 to 3.3	67	1.6	111	0	155	0
24	3.2	68	3.3	112	3.3	156	0 to 3.3
25	3.2	69	1.6	113	0	157	0 to 3.3
26	3.2	70	1.6	114	0	158	0 to 3.3
27	3.2	71	1.6	115	0	159	3.3
28	3.2	72	0	116	0 to 5	160	0 to 3.3
29	3.2	73	1.6	117	0 to 4.4	161	0 to 3.3
30	3.2	74	3.3	118	0	162	0
31	3.2	75	0.6	119	0 to 5	163	0 to 3.3
32	3.2	76	2.7	120	0 to 5	164	0 to 3.3
33	0	77	0	121	–	165	0 to 3.3
34	0	78	3.3	122	–	166	3.3
35	0	79	0.7	123	0	167	0 to 3.3
36	0.5	80	0.7	124	0	168	0 to 3.3
37	3.2	81	0	125	3.3	169	0
38	0.5	82	1.2	126	0	170	0 to 3.3
39	0	83	3.3	127	0	171	0 to 3.3
40	0.5	84	0.5	128	0	172	0 to 3.3
41	3.2	85	–	129	0	173	3.3
42	1.0	86	3.3	130	0	174	3.3
43	2.2	87	3.3	131	1.8	175	0 to 3.3
44	1.0	88	0	132	3.3	176	0 to 3.3

IC3201

Pin	Voltage (V)	Pin	Voltage (V)
1	5.0	25	0
2	0	26	5.0
3	4.5	27	0
4	3.7	28	5.0
5	3.6	29	5.0
6	0	30	5.0
7	0	31	5.0
8	3.7	32	5.0
9	0 to 5	33	5.0
10	0 to 5	34	5.0
11	0 to 5	35	5.0
12	0 to 5	36	5.0
13	5.0	37	0
14	5.0	38	5.0
15	0	39	5.0
16	0 to 5	40	0
17	0 to 5	41	5.0
18	5.0	42	0
19	0	43	0
20	0.1	44	1.3
21	1.7	45	0
22	0.1	46	2.4
23	2.0	47	0
24	0 to 5	48	5.0

IC3203

Pin	Voltage (V)	Pin	Voltage (V)	Pin	Voltage (V)	Pin	Voltage (V)
1	3.3	21	0	41	4.9	61	0
2	3.3	22	3.3	42	4.9	62	4.9
3	0 to 3.3	23	3.3	43	0	63	0 to 3.3
4	0 to 3.3	24	0	44	0	64	0.6
5	0 to 3.3	25	0.2	45	0	65	0
6	0 to 3.3	26	0.5	46	0	66	1.1
7	0 to 3.3	27	0	47	0	67	1.1
8	0 to 3.3	28	0.8	48	0	68	4.9
9	0 to 3.3	29	0.8	49	0	69	1.7
10	0 to 3.3	30	5.0	50	0.4	70	3.2
11	0	31	0	51	0	71	0
12	0	32	3.2	52	1.1	72	0
13	0 to 3.3	33	3.2	53	0	73	0 to 3.3
14	0 to 3.3	34	0	54	0	74	0 to 3.3
15	0 to 3.3	35	4.9	55	0	75	0 to 3.3
16	0 to 3.3	36	1.1	56	0	76	0 to 3.3
17	0 to 3.3	37	1.1	57	0	77	0 to 3.3
18	0 to 3.3	38	0	58	4.9	78	0 to 3.3
19	0 to 3.3	39	0.5	59	0	79	0 to 3.3
20	0 to 3.3	40	0	60	0	80	0 to 3.3

IC3205

Pin	Voltage (V)
1	0
2	4.9
3	0 to 5
4	0
5	0
6	0
7	0
8	0.2
9	0 to 5
10	5.0
11	0 to 5
12	0 to 5
13	5.0
14	5.0

IC3207

Pin	Voltage (V)
1	0
2	5.0
3	0 to 5
4	0 to 5
5	0 to 5
6	0 to 5
7	0
8	0 to 5
9	0 to 5
10	0 to 5
11	0 to 5
12	0 to 5
13	0 to 5
14	5.0

IC3208

Pin	Voltage (V)
1	0
2	2.6
3	5.0
4	0 to 5
5	5.0
6	1.1
7	0 to 5
8	0
9	0 to 5
10	0.3
11	5.0
12	0 to 5
13	5.0
14	4.6
15	0
16	5.0

IC3601

Pin	Voltage (V)	Pin	Voltage (V)	Pin	Voltage (V)	Pin	Voltage (V)
1	0 to 3.3	26	0 to 3.3	51	0 to 3.3	76	0
2	3.3	27	0 to 3.3	52	0	77	0 to 3.3
3	0 to 3.3	28	0 to 3.3	53	0	78	0 to 3.3
4	0 to 3.3	29	0 to 3.3	54	3.3	79	3.3
5	0	30	0 to 3.3	55	–	80	0 to 3.3
6	0 to 3.3	31	0 to 3.3	56	0	81	0 to 3.3
7	0 to 3.3	32	0 to 3.3	57	0	82	0
8	3.3	33	0 to 3.3	58	0	83	0 to 3.3
9	0 to 3.3	34	0 to 3.3	59	3.3	84	0 to 3.3
10	0 to 3.3	35	3.3	60	0 to 3.3	85	0
11	0	36	0	61	0 to 3.3	86	0
12	0 to 3.3	37	0	62	0	87	0
13	0 to 3.3	38	0	63	0 to 3.3	88	0
14	3.3	39	0	64	0 to 3.3	89	0
15	3.3	40	0	65	3.3	90	0
16	0	41	0	66	0	91	0
17	0 to 3.3	42	0	67	3.3	92	0
18	0 to 3.3	43	0	68	0 to 3.3	93	0
19	0	44	0	69	0 to 3.3	94	0
20	0 to 3.3	45	0	70	0	95	0
21	0 to 3.3	46	0	71	0 to 3.3	96	3.3
22	3.3	47	0 to 3.3	72	0 to 3.3	97	0 to 3.3
23	0	48	0 to 3.3	73	3.3	98	0 to 3.3
24	0	49	0 to 3.3	74	0 to 3.3	99	0
25	0 to 3.3	50	0 to 3.3	75	0 to 3.3	100	0 to 3.3

IC3602

Pin	Voltage (V)	Pin	Voltage (V)
1	0	35	0
2	0 to 3.3	36	0 to 3.3
3	0 to 3.3	37	0
4	0 to 3.3	38	0 to 3.3
5	0 to 3.3	39	–
6	0 to 3.3	40	0 to 3.3
7	0 to 3.3	41	0.4
8	0	42	4.9
9	0	43	0
10	4.8	44	2.1
11	4.8	45	4.8
12	0 to 3.3	46	0
13	0 to 3.3	47	0.8
14	0 to 3.3	48	4.8
15	0 to 3.3	49	4.8
16	0 to 3.3	50	0
17	0	51	1.1
18	0 to 3.3	52	4.8
19	0 to 3.3	53	0
20	0 to 3.3	54	1.1
21	0 to 3.3	55	0
22	0 to 3.3	56	2.1
23	0 to 3.3	57	2.1
24	0 to 3.3	58	4.9
25	0 to 3.3	59	0
26	4.9	60	0
27	0	61	4.8
28	0 to 3.3	62	4.8
29	0	63	0
30	–	64	0 to 3.3
31	4.9	65	0 to 3.3
32	0 to 3.3	66	0 to 3.3
33	4.9	67	0 to 3.3
34	0	68	0 to 3.3

IC3604

Pin	Voltage (V)	Pin	Voltage (V)	Pin	Voltage (V)	Pin	Voltage (V)
1	0 to 3.3	26	0 to 3.3	51	0 to 3.3	76	0
2	3.3	27	0 to 3.3	52	0	77	0 to 3.3
3	0 to 3.3	28	0 to 3.3	53	0	78	0 to 3.3
4	0 to 3.3	29	0 to 3.3	54	3.3	79	3.3
5	0	30	0 to 3.3	55	–	80	0 to 3.3
6	0 to 3.3	31	0 to 3.3	56	0	81	0 to 3.3
7	0 to 3.3	32	0 to 3.3	57	0	82	0
8	3.3	33	0 to 3.3	58	0	83	0 to 3.3
9	0 to 3.3	34	0 to 3.3	59	3.3	84	0 to 3.3
10	0 to 3.3	35	3.3	60	0 to 3.3	85	0
11	0	36	0	61	0 to 3.3	86	0
12	0 to 3.3	37	0	62	0	87	0
13	0 to 3.3	38	0	63	0 to 3.3	88	0
14	3.3	39	0	64	0 to 3.3	89	0
15	3.3	40	0	65	3.3	90	0
16	0	41	0	66	0	91	0
17	0 to 3.3	42	0	67	3.3	92	0
18	0 to 3.3	43	0	68	0 to 3.3	93	0
19	0	44	0	69	0 to 3.3	94	0
20	0 to 3.3	45	0	70	0	95	0
21	0 to 3.3	46	0	71	0 to 3.3	96	3.3
22	3.3	47	0 to 3.3	72	0 to 3.3	97	0 to 3.3
23	0	48	0 to 3.3	73	3.3	98	0 to 3.3
24	0	49	0 to 3.3	74	0 to 3.3	99	0
25	0 to 3.3	50	0 to 3.3	75	0 to 3.3	100	0 to 3.3

IC3801

Pin	Voltage (V)	Pin	Voltage (V)	Pin	Voltage (V)	Pin	Voltage (V)
1	4.9	26	0	51	4.9	76	4.9
2	4.9	27	0 to 4.9	52	4.9	77	4.9
3	4.9	28	0 to 4.9	53	0.4	78	0
4	4.9	29	0 to 4.9	54	0.6	79	0
5	4.9	30	0 to 4.9	55	0.6	80	0
6	4.9	31	0 to 4.9	56	0.6	81	0
7	4.9	32	0 to 4.9	57	0	82	0
8	4.9	33	0 to 4.9	58	4.4	83	0
9	4.9	34	0 to 4.9	59	0	84	4.9
10	4.9	35	4.9	60	0	85	0
11	0	36	0 to 4.9	61	0	86	0
12	4.9	37	0 to 4.9	62	4.9	87	3.0
13	4.9	38	0 to 4.9	63	0	88	2.7
14	0 to 4.9	39	0 to 4.9	64	4.9	89	3.0
15	4.9	40	0 to 4.9	65	0	90	4.9
16	0 to 4.9	41	0 to 4.9	66	0	91	4.9
17	0.2	42	0 to 4.9	67	0	92	0
18	0	43	0 to 4.9	68	4.9	93	4.9
19	0	44	0	69	0	94	4.9
20	0	45	0 to 4.9	70	4.9	95	0
21	0	46	0 to 4.9	71	4.9	96	0
22	0	47	0 to 4.9	72	4.9	97	4.9
23	0	48	0 to 4.9	73	4.9	98	4.9
24	0	49	0	74	0	99	4.9
25	0	50	5.0	75	4.9	100	4.9

J DEFLECTION SERVICE ASSY

IC401

Pin	Voltage (V)
1	0
2	0
3	-19.0
4	-20.2
5	22.0
6	–
7	–
8	-20.2
9	–
10	22.0
11	–
12	-20.2
13	–
14	–
15	–
16	–
17	-20.2
18	–

IC402

Pin	Voltage (V)
1	0
2	0
3	-19.1
4	-20.2
5	22.0
6	–
7	–
8	-20.2
9	–
10	22.0
11	–
12	-20.2
13	–
14	–
15	–
16	–
17	-20.2
18	–

IC801

Pin	Voltage (V)
1	0 to 5
2	1.0
3	4.9
4	-0.3
5	-1.1
6	0
7	-1.1
8	0
9	-5.0
10	0
11	0.3
12	-1.0
13	0
14	-0.9
15	0
16	-1.7

IC802

Pin	Voltage (V)
1	0
2	22.3
3	-19.4
4	-20.8
5	0.5
6	22.1
7	0

IC805

Pin	Voltage (V)
1	-0.2
2	-0.2
3	-0.6
4	0
5	0
6	0
7	0
8	0
9	0
10	-0.5
11	-0.2
12	0
13	4.9
14	-5.0

K DIGITAL CONV. ASSY

IC1204

Pin	Voltage (V)	Pin	Voltage (V)	Pin	Voltage (V)	Pin	Voltage (V)
1	4.8	21	0 to 5	41	0	61	0
2	0	22	0	42	0	62	0
3	0	23	0	43	0	63	0
4	4.9	24	0	44	0	64	0
5	4.9	25	0	45	0	65	0
6	4.9	26	0	46	0	66	0
7	4.9	27	0 to 5	47	0 to 5	67	3.2
8	4.9	28	3.1	48	0 to 5	68	1.3
9	4.9	29	0	49	0	69	1.8
10	4.9	30	0	50	0 to 5	70	2.0
11	4.9	31	0	51	0 to 5	71	1.6
12	0	32	0	52	0	72	0
13	4.9	33	3.2	53	4.9	73	3.2
14	0	34	0 to 5	54	0 to 5	74	0
15	4.9	35	0	55	0 to 5	75	3.1
16	4.9	36	3.2	56	0 to 5	76	3.1
17	0	37	0	57	0 to 5	77	3.1
18	0	38	0	58	0	78	0
19	0	39	1.2	59	0	79	0
20	0	40	2.1	60	0	80	0

IC1205

Pin	Voltage (V)	Pin	Voltage (V)
1	0 to 5	25	2.5
2	0 to 5	26	4.9
3	0 to 5	27	0
4	0 to 5	28	0
5	0 to 5	29	0
6	0	30	0
7	0	31	4.9
8	2.6	32	3.4
9	3.4	33	2.5
10	4.9	34	0
11	0	35	4.9
12	2.5	36	3.4
13	3.4	37	2.5
14	4.9	38	0
15	0	39	4.9
16	2.5	40	3.4
17	3.4	41	2.5
18	4.9	42	0
19	0	43	0
20	0	44	4.9
21	0	45	4.9
22	0	46	0 to 5
23	0	47	0 to 5
24	0	48	0 to 5

IC1202

Pin	Voltage (V)
1	-0.4
2	2.0
3	2.0
4	-5.0
5	-0.2
6	-0.2
7	-0.4
8	4.9

IC1209

Pin	Voltage (V)
1	0
2	0
3	0
4	-5.0
5	0
6	0
7	0
8	4.9

IC1206-IC1208, IC1210, IC1211

Pin	Voltage (V)
1	0
2	2.0
3	2.0
4	-5.0
5	0
6	0
7	0
8	4.9

• Connectors

C1 (CN1201)		DC Voltage (V)	D1 (CN406)	
Pin	Name		Pin	Name
1	WP	4.9	1	WP
2	CBUSY	4.9	2	CBUSY
3	CRESET	4.9	3	CRESET
4	CSDA	4.9	4	CSDA
5	CSCL	4.9	5	CSCL
6	VBLK2	0 to 5	6	VBLK2
7	DHBLK	0 to 5	7	DHBLK
8	GND	0	8	GND
9	CVR	0	9	CVR
10	CVG	0	10	CVG
11	CVB	0	11	CVB
12	CVBLK	0	12	CVBLK
13	GND	0	13	GND
14	HVRST	3.3	14	HVRST
15	CMUTE	0	15	CMUTE

C2 (CN1202)		DC Voltage (V)	D2 (CN405)	
Pin	Name		Pin	Name
1	GND	0	1	GND
2	GND	0	2	GND
3	BV	0	3	BV
4	BH	0	4	BH
5	GV	0	5	GV
6	GH	0	6	GH
7	RV	0	7	RV
8	RH	0	8	RH
9	V+3V	3.2	9	V+3V
10	GND	0	10	GND
11	V+5V	4.9	11	V+5V
12	GND	0	12	GND
13	V-5V	-5	13	V-5V
14	GND	0	14	GND
15	HVPARA	1.6	15	HVPARA

D4 (CN404)		DC Voltage (V)	P4 (CN904)	
Pin	Name		Pin	Name
1	GND	0	1	GND
2	NC	0	2	NC
3	GND	0	3	GND
4	V+5V	5	4	V+5V
5	V+3V	3.2	5	V+3V
6	V+5VSTB	5.1	6	V+5VSTB
7	GND	0	7	GND
8	CVBLK	0	8	CVBLK
9	CVB	0	9	CVB
10	CVG	0	10	CVG
11	CVR	0	11	CVR
12	GND	0	12	GND
13	GND	0	13	GND
14	CBUSY	4.9	14	CBUSY
15	CRESET	4.8	15	CRESET
16	CSDA	4.9	16	CSDA
17	CSCL	4.9	17	CSCL
18	WP	4.9	18	WP
19	CMUTE	0	19	CMUTE

D5 (CN502)		DC Voltage (V)	P5 (CN905)	
Pin	Name		Pin	Name
1	PD	0	1	PD
2	HDRV	0 to 5	2	HDRV
3	HSIZEADJ	3.9	3	HSIZEADJ
4	VBLK2	0 to 5	4	VBLK2
5	GND	0	5	GND
6	GND	0	6	GND
7	DHBLK	0 to 5	7	DHBLK
8	GND	0	8	GND
9	NC	0	9	NC
10	CPURST	12	10	CPURST
11	VSIZEADJ	4.1	11	VSIZEADJ
12	ABL	6.3	12	ABL

D6 (CN501)		DC Voltage (V)	P6 (CN304)	
Pin	Name		Pin	Name
1	GND	0	1	GND
2	GND	0	2	GND
3	V+15V	15.9	3	V+15V
4	V-20V	-20.8	4	V-20V
5	V-20V	-20.8	5	V-20V
6	GND C	0	6	GND C
7	GND C	0	7	GND C
8	GND C	0	8	GND C
9	GND C	0	9	GND C
10	V+21V	22.5	10	V+21V
11	V+21V	22.5	11	V+21V
12	V+12V	11.9	12	V+12V

J2101		DC Voltage (V)	RF SWITCH	
Pin	Name		Pin	Name
1	MODE SELECT	0	1	MODE SELECT
2	GND	0	2	GND
3	V+9V	9	3	V+9V

P14 (CN306)		DC Voltage (V)	R4 (CN1006)	
Pin	Name		Pin	Name
1	V+230V	228	1	V+230V
2	NC	0	2	NC
3	NC	0	3	NC
4	GND H	0	4	GND H
5	HT+	22.5	5	HT+
6	HT-	16.0	6	HT-
7	V+12V	11.8	7	V+12V

P3 (CN751)		DC Voltage (V)	R2 (CN1002) G2 (CN1056) B2 (CN1105)	
Pin	Name		Pin	Name
1	R1	59.5	R2-1	R1
2	GND H	0.0	R2-2	GND H
3	R2	59.0	R2-3	R2
4	G1	59.0	G2-1	G1
5	GND	0.0	G2-2	GND
6	G2	59.0	G2-3	G2
7	B1	58.7	B2-1	B1
8	GND	0.0	B2-2	GND
9	B2	59.0	B2-3	B2

P7 (CN305)		DC Voltage (V)	J501	
Pin	Name		Pin	Name
1	GND H	0	1	GND H
2	GND H	0	2	GND H
3	V+120V	118.5	3	V+120V
4	V+120V	118.5	4	V+120V

S1 (CN2804)		DC Voltage (V)	N1 (CN1172)	
Pin	Name		Pin	Name
1	V+9V1	8.9	1	V+9V1
2	GND	0.0	2	GND
3	FR	3.7 (0.1)	3	FR
4	GND	0.0	4	GND
5	FL	3.7 (0.1)	5	FL
6	GND	0.0	6	GND
7	FV	0.0 (3.8)	7	FV
8	GND	0.0	8	GND
9	FC	0.0	9	FC
10	GND	0.0	10	GND
11	FY	0.0 (4.0)	11	FY
12	S2	0.1	12	S2

( ) : The voltage at Front PCBs removed

S2 (CN2304)		DC Voltage (V)	V2 (CN1403)	
Pin	Name		Pin	Name
1	STDSW	8.9	1	STDSW
2	CPURST	12	2	CPURST
3	SBUSY	0	3	SBUSY
4	SSDA	0 to 5	4	SSDA
5	SSCL	0 to 5	5	SSCL
6	VMUTE	0	6	VMUTE
7	RST	3.8	7	RST
8	PASS	0	8	PASS
9	ESCL	0	9	ESCL
10	ESDA	0	10	ESDA
11	SDA1	0 to 5	11	SDA1
12	SCL1	0 to 5	12	SCL1
13	GND	0	13	GND
14	DIOR	4.8	14	AUDIOR
15	GND	0	15	GND
16	AUDIOL	4.6	16	AUDIOL
17	GND	0	17	GND
18	AMUTE	0	18	AMUTE
19	CMUTE	0	19	CMUTE

S3 (CN2603)		DC Voltage (V)	V3 (CN3101)	
Pin	Name		Pin	Name
1	GND	0	1	GND
2	GND	0	2	GND
3	GND	0	3	GND
4	MCCY	6.2	4	MCCY
5	COMPOX2	4.8	5	COMPOX2
6	SCOMPSW	0	6	SCOMPSW
7	MCOMPSW	4.8	7	MCOMPSW
8	GND	0	8	GND
9	SCR	3.1	9	SCR
10	SCB	3.1	10	SCB
11	SY	3.1	11	SY
12	SVSYNC	0 to 5	12	SVSYNC
13	SHSYNC	0 to 5	13	SHSYNC
14	GND	0	14	GND
15	GND	0	15	GND
16	GND	0	16	GND
17	MCR	4.3	17	MCR
18	MCB	4.3	18	MCB
19	MY	5.1	19	MY

S4 (CN2806)		DC Voltage (V)	V4 (CN1902)	
Pin	Name		Pin	Name
1	PSW	0	1	PSW
2	VBLK1	0 to 5	2	VBLK1
3	SYNCDET	0	3	SYNCDET
4	HOSCSW	0	4	HOSCSW
5	YGSW	0.1	5	YGSW
6	VS	0	6	VS
7	HS	0	7	HS
8	VDRV	0 to 5	8	VDRV
9	SYNCYG	1.9	9	SYNCYG
10	GND	0	10	GND
11	V	0	11	V
12	H	0	12	H
13	B	2.9	13	B
14	G	2.1	14	G
15	R	2.7	15	R
16	GND	0	16	GND
17	PR	1.9	17	PR
18	PB	1.9	18	PB
19	Y	2.6	19	Y

S5 (CN2601)		DC Voltage (V)	V5 (CN3102)	
Pin	Name		Pin	Name
1	MHSYNC	0 to 5	1	MHSYNC
2	MVSYNC	0 to 5	2	MVSYNC
3	GND	0.0	3	GND
4	GND	0.0	4	GND
5	GND	0.0	5	GND
6	GND	0.0	6	GND

S6 (CN2303)		DC Voltage (V)	P11 (CN302)	
Pin	Name		Pin	Name
1	ACCLK	1.5	1	ACCLK
2	RELAY	1.4	2	RELAY
3	DHBLK	0 to 5	3	DHBLK
4	VBLK2	0 to 5	4	VBLK2
5	V+5VSTB	5.0	5	V+5VSTB
6	GND	0.0	6	GND

S7 (CN2602)		DC Voltage (V)	P12 (CN301)	
Pin	Name		Pin	Name
1	V+35V	37.4	1	V+35V
2	V+11V	12.7	2	V+11V
3	V+6V	5.8	3	V+6V
4	GND	0	4	GND
5	GND	0	5	GND
6	V+9V1	8.9	6	V+9V1
7	GND	0	7	GND
8	GND	0	8	GND
9	V+5V	4.9	9	V+5V
10	GND	0	10	GND
11	V+3V	3.2	11	V+3V
12	GND	0	12	GND

S8 (CN2301)		DC Voltage (V)	L1 (CN1191) F1 (CN1151)	
Pin	Name		Pin	Name
1	V+9V	8.9	F1-1	V+9V
2	V+5VSTB	5.0	F1-2	V+5VSTB
3	KEY	5.0	F1-3	KEY
4	RLS	5.0 (0)	F1-4	RLS
5	GND	0.0	F1-5	GND
6	V+5VSTB	5.0	L1-1	V+5VSTB
7	REM	2.9	L1-2	REM
8	GND	0.0	L1-3	GND

( ) : The voltage at Front PCBs removed

V1 (CN1901)		DC Voltage (V)	R1 (CN1003) G1 (CN1054) B1 (CN1103)	
Pin	Name		Pin	Name
1	V+12V	11.9	B1-1	V+12V
2	GND	0	B1-2	GND
3	BOUT	11.3	B1-3	BOUT
4	GND	0	B1-4	GND
5	V+12V	11.9	G1-1	V+12V
6	GND	0	G1-2	GND
7	GOUT	11.3	G1-3	GOUT
8	GND	0	G1-4	GND
9	V+12V	11.9	R1-1	V+12V
10	GND	0	R1-2	GND
11	ROUT	11.2	R1-3	ROUT
12	GND	0	R1-4	GND

V6 (CN1402)		DC Voltage (V)	P8 (CN902)	
Pin	Name		Pin	Name
1	CMUTE	0	1	CMUTE
2	WP	4.9	2	WP
3	CSCL	4.9	3	CSCL
4	CSDA	4.9	4	CSDA
5	CRESET	4.9	5	CRESET
6	CBUSY	4.9	6	CBUSY
7	GND	0	7	GND
8	GND	0	8	GND
9	CVR	0	9	CVR
10	CVG	0	10	CVG
11	CVB	0	11	CVB
12	CVBLK	0	12	CVBLK
13	GND	0	13	GND
14	GND	0	14	GND
15	AMUTE	0	15	AMUTE
16	GND	0	16	GND
17	AUDIOL	4.5	17	AUDIOL
18	GND	0	18	GND
19	AUDIOR	4.5	19	AUDIOR

V7 (CN1401)		DC Voltage (V)	P9 (CN903)	
Pin	Name		Pin	Name
1	SCL1	0 to 5	1	SCL1
2	SDA1	0 to 5	2	SDA1
3	GND	0	3	GND
4	SVMY	3.6	4	SVMY
5	GND	0	5	GND
6	ABL	6.4	6	ABL
7	GND	0	7	GND
8	VSIZEADJ	4.1	8	VSIZEADJ
9	CPURST	12	9	CPURST
10	MODE1	5	10	MODE1
11	GND	0	11	GND
12	DHBLK	0 to 5	12	DHBLK
13	VDRV	0 to 5	13	VDRV
14	GND	0	14	GND
15	GND	0	15	GND
16	HSIZEADJ	3.9	16	HSIZEADJ
17	HDRV	0 to 5	17	HDRV
18	GND	0	18	GND
19	GND	0	19	GND

V8 (CN1903)		DC Voltage (V)	P10 (CN303)	
Pin	Name		Pin	Name
1	V+9V2	8.9	1	V+9V2
2	GND	0	2	GND
3	GND	0	3	GND
4	V+5V	4.9	4	V+5V
5	GND	0	5	GND
6	GND	0	6	GND
7	GND	0	7	GND
8	V+3V	3.1	8	V+3V
9	V+3V	3.1	9	V+3V
10	V+3V	3.1	10	V+3V
11	GND	0	11	GND
12	V+6V	5.7	12	V+6V

4. PCB CONNECTION DIAGRAM

NOTE FOR PCB DIAGRAMS :

1. Part numbers in PCB diagrams match those in the schematic diagrams.
2. A comparison between the main parts of PCB and schematic diagrams is shown below.

Symbol In PCB Diagrams	Symbol In Schematic Diagrams	Part Name
B C E	B C E B C E	Transistor
B C E	B C E B C E	Transistor with resistor
D G S	D G S D G S	Field effect transistor
		Resistor array
		3-terminal regulator

3. The parts mounted on this PCB include all necessary parts for several destinations.
   For further information for respective destinations, be sure to check with the schematic diagram.
4. View point of PCB diagrams.

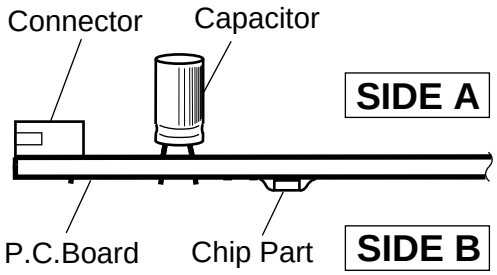

• For DEFLECTION SERVICE and POWER SUPPLY ASSYS

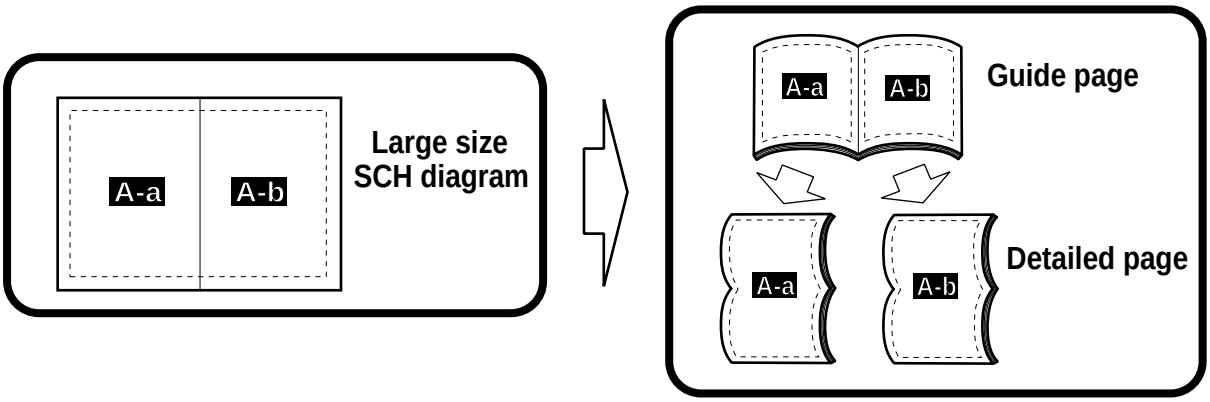

4.1 FRONT LED, FRONT INPUT, REMOTE SENSOR, SHORT and POWER SW ASSYS

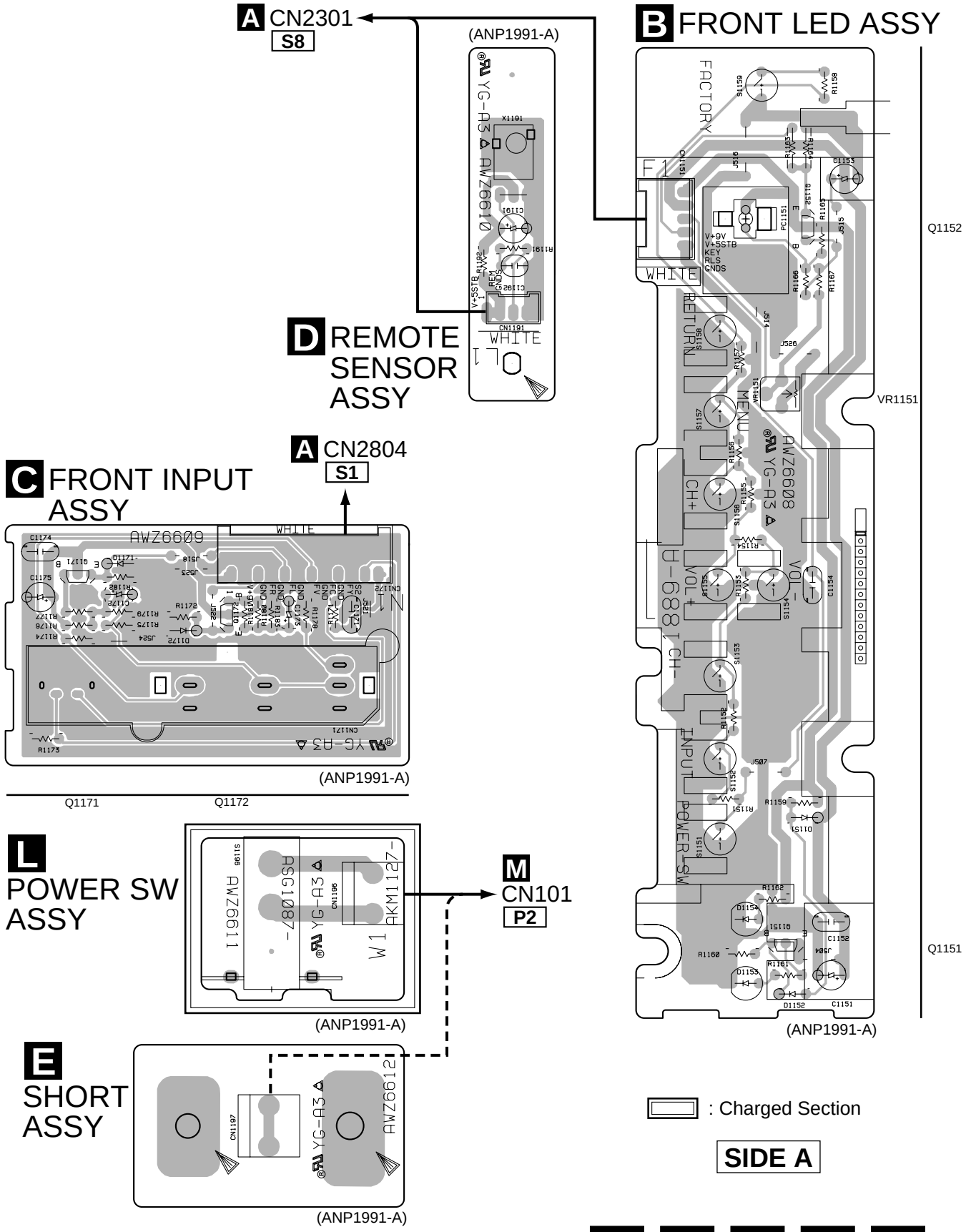

4.2 SIGNAL ASSY

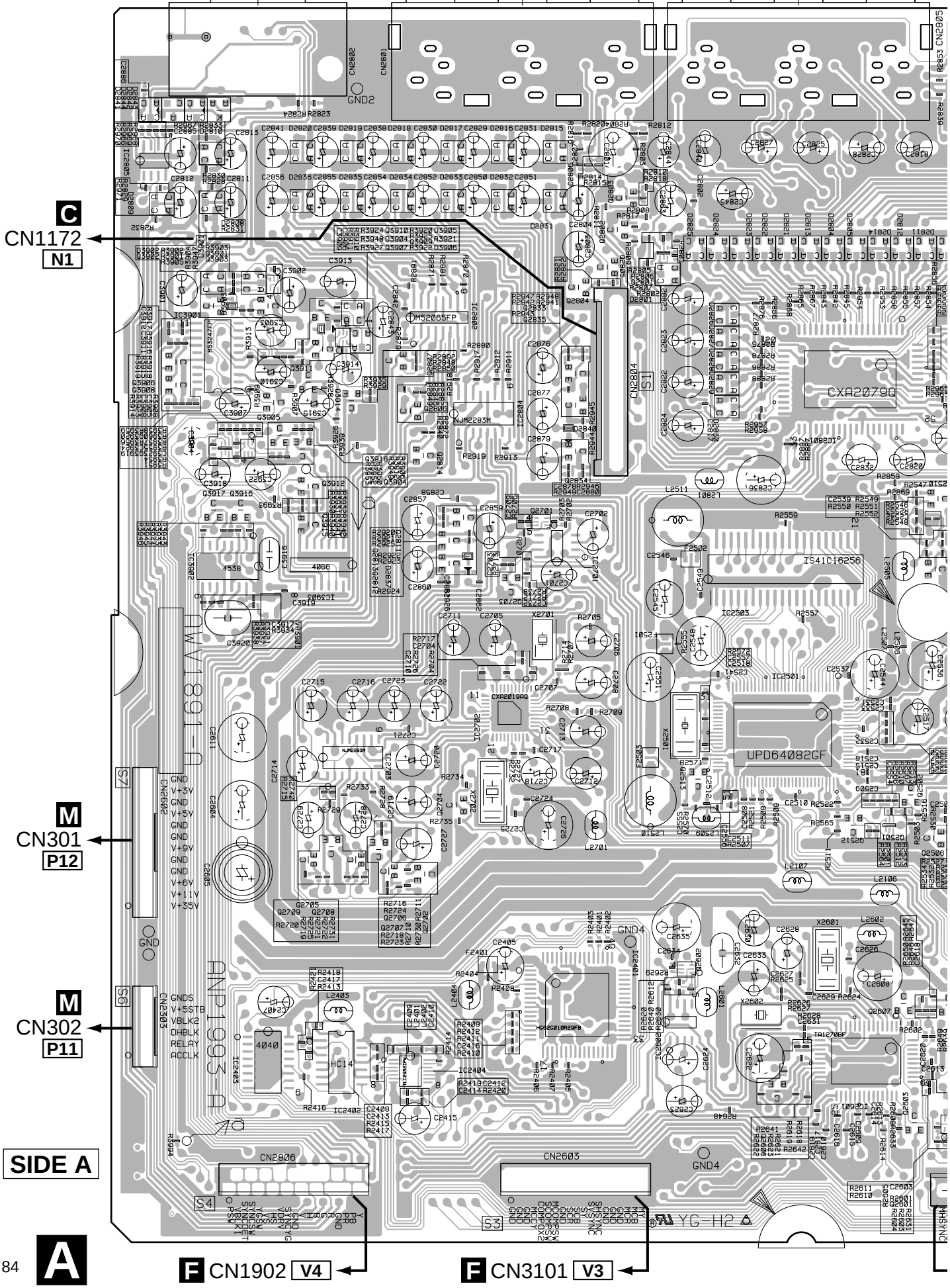

A SIGNAL ASSY

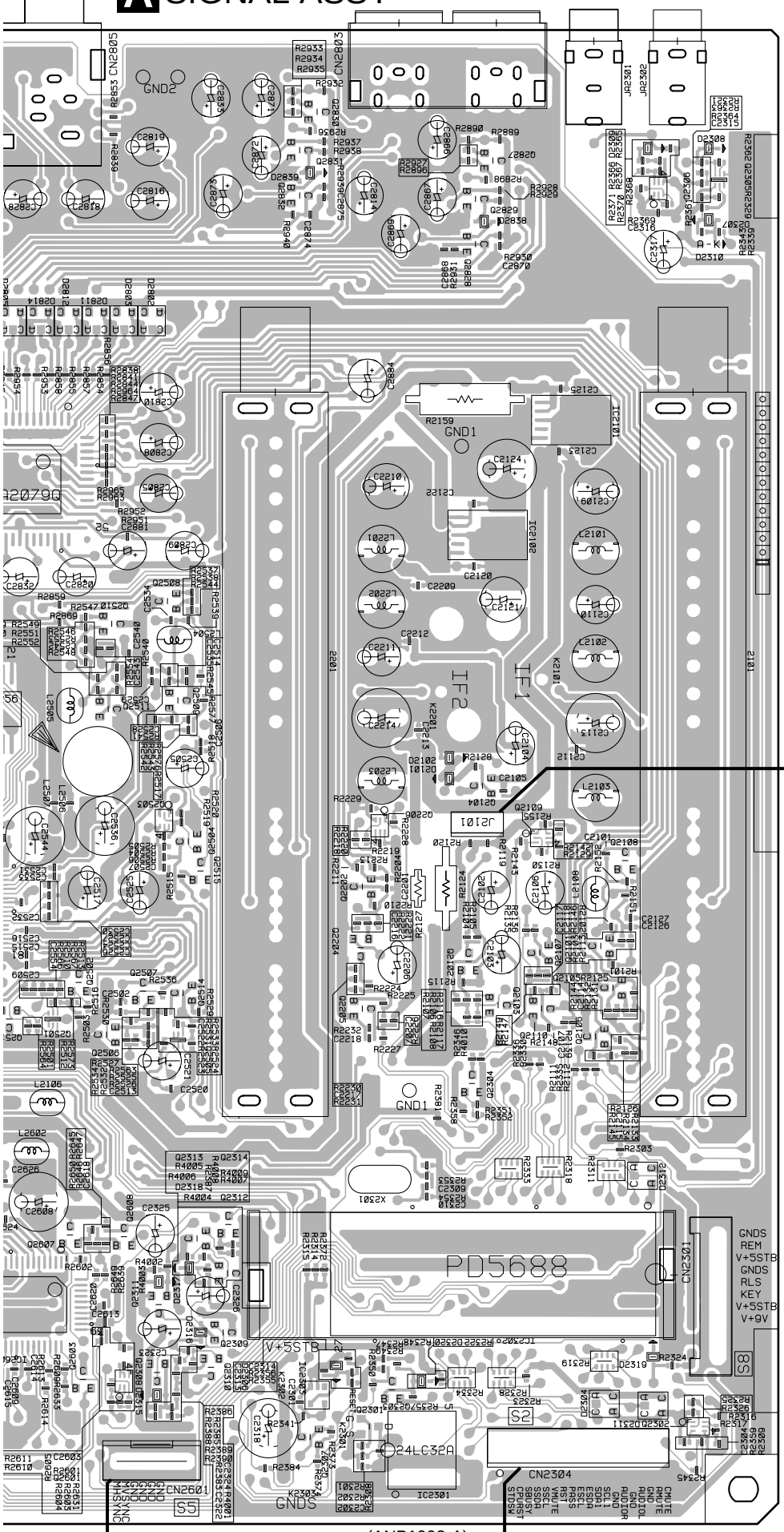

(ANP1993-A)

Q2830			
Q2831	Q2827		
Q2832	Q2829		
IC2805	Q2306		
	Q2828		
Q2803			
Q2802			
Q2805			
Q2834			
Q3910	IC2802		
Q2804	Q3901	IC2101	
Q3902	Q3903		
IC3901	Q3907		
Q3906	Q2807	IC2801	
		Q2833	
Q3908	Q3911		
Q3905	Q3914	Q2835	
	Q2806		
	IC2804		
Q3918		IC2102	
Q3920	Q3904	Q2834	
Q3919	Q2814		
Q3904			
	Q3912	Q2508	
		Q2510	
Q3917			
Q3916	Q2811	Q2701	
Q3915			
	Q2813	IC2701	
IC3903	Q2812		Q2509
IC3902		IC2503	Q2511
	Q2703		
	Q2104		
Q2503			
Q2504	Q2206		
		Q2109	
Q2515		Q2108	
IC2702	Q2202		
IC2501			
IC2703			Q2101
	Q2204		Q2107
Q2513		Q2102	
	Q2502	Q2507	
Q2704		Q2514	Q2105
		Q2205	Q2103
	Q2512		Q2110
Q2706	Q2501		
Q2705	Q2506	Q2505	Q2106
Q2709			
Q2708	Q2702		
Q2707			Q2304
Q2602			
			Q2314
IC2401	Q2607	Q2608	Q2313
IC2602			
			Q2312
IC2402			
IC2403	IC2601	Q2311	
IC2404			IC2302
Q2606		Q2309	
		Q2310	
		Q2308	
	Q2603		
	Q2601	IC2303	Q2303
		Q2301	Q2302
	Q2307		
			IC2301

F CN3102 V5

F CN1403 V2

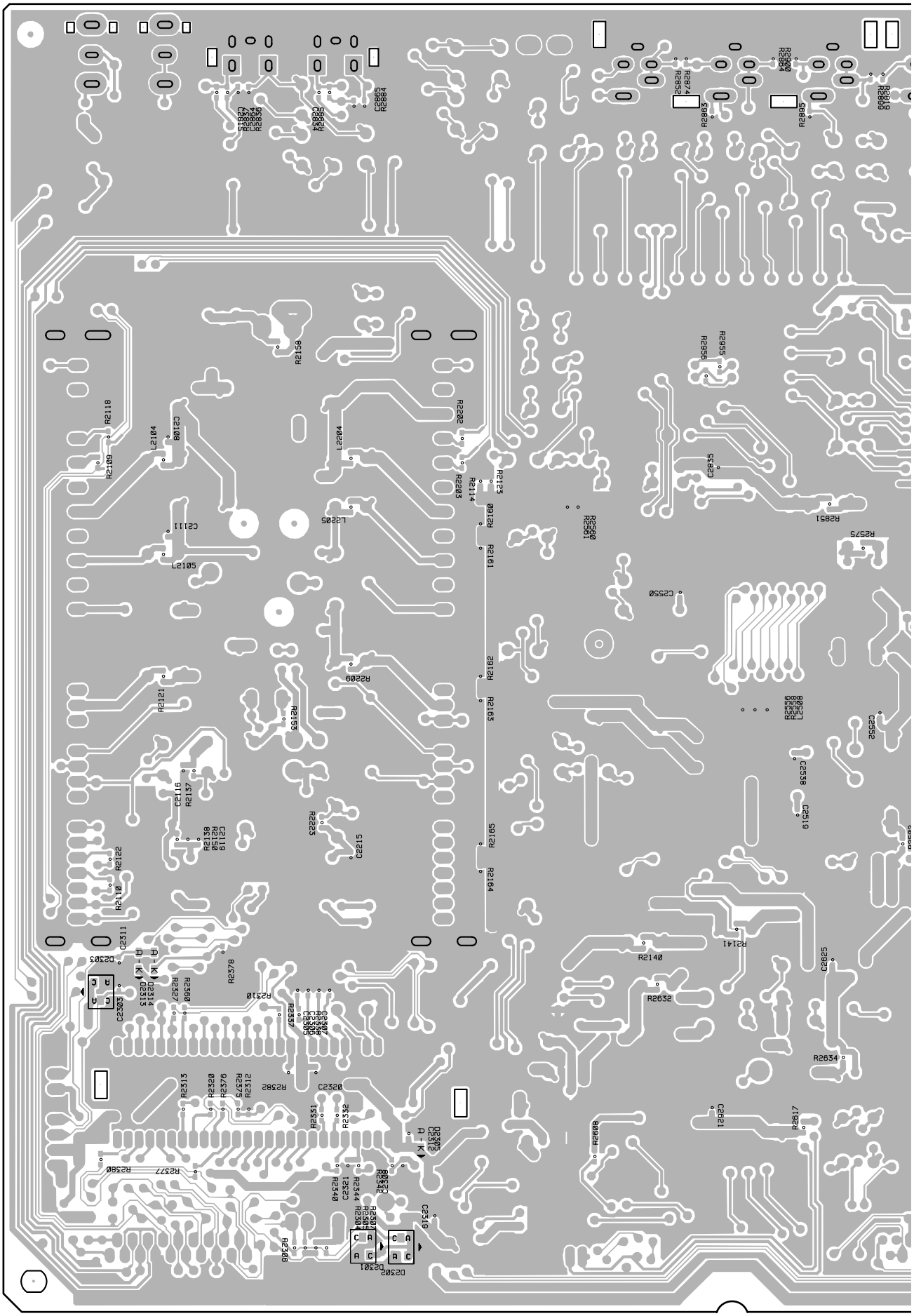
R2159
R2118
R2109
C2108
L2104
L2104
R2202
R2205
R2114
R2123
R2160
R2161
R2162
R2163
R2165
R2164
R2560
R2561
R2595
R2596
C2535
R2551
R2575
C2550
L2105
C2111
L2205
R2209
R2121
R2195
C2116
R2137
C2119
R2138
R2150
R2222
C2215
R2122
R2110
C2311
D2503
D2314
D2315
C2303
R2360
R2327
R2378
R2310
R2357
R2313
R2320
R2376
R2275
R2312
R2382
C2320
R2331
R2332
R2377
R2380
R2340
R2323
R2344
R2304
R2306
D2301
D2302
D2305
D2312
C2319
R2140
R2141
R2632
R2634
R2608
C2621
R2617
C2625
C2552
C2558
C2519
R2556
R2558
L2508
R2895
R2865
R2874
R2884
R2900
R2904
R2910
R2880
R2856
C2884
C2864
C2867
C2885
R2885
R2864
C2885
C2884

A SIGNAL ASSY

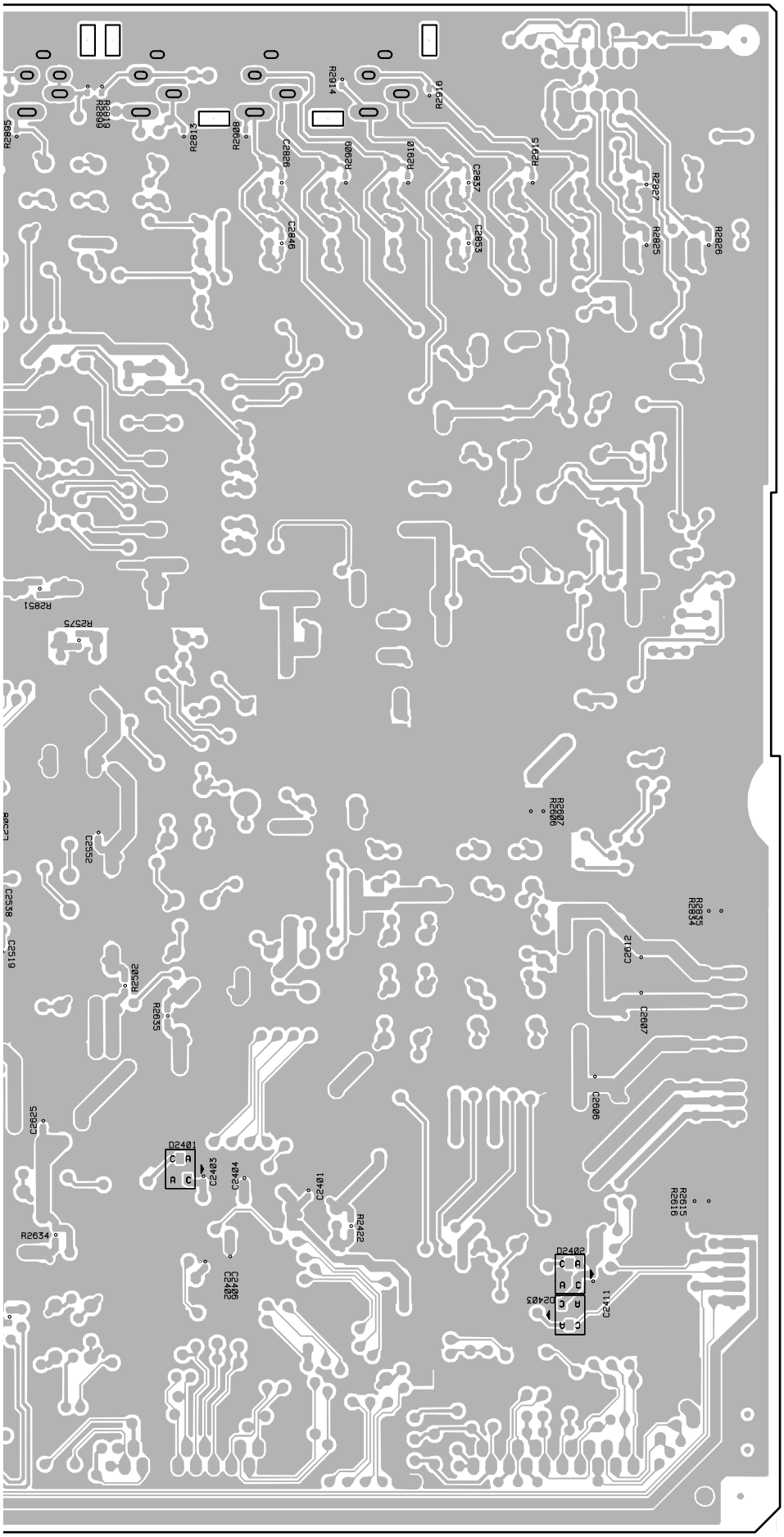

(ANP1993-A)

SIDE B

4.3 VIDEO IP SERVICE ASSY

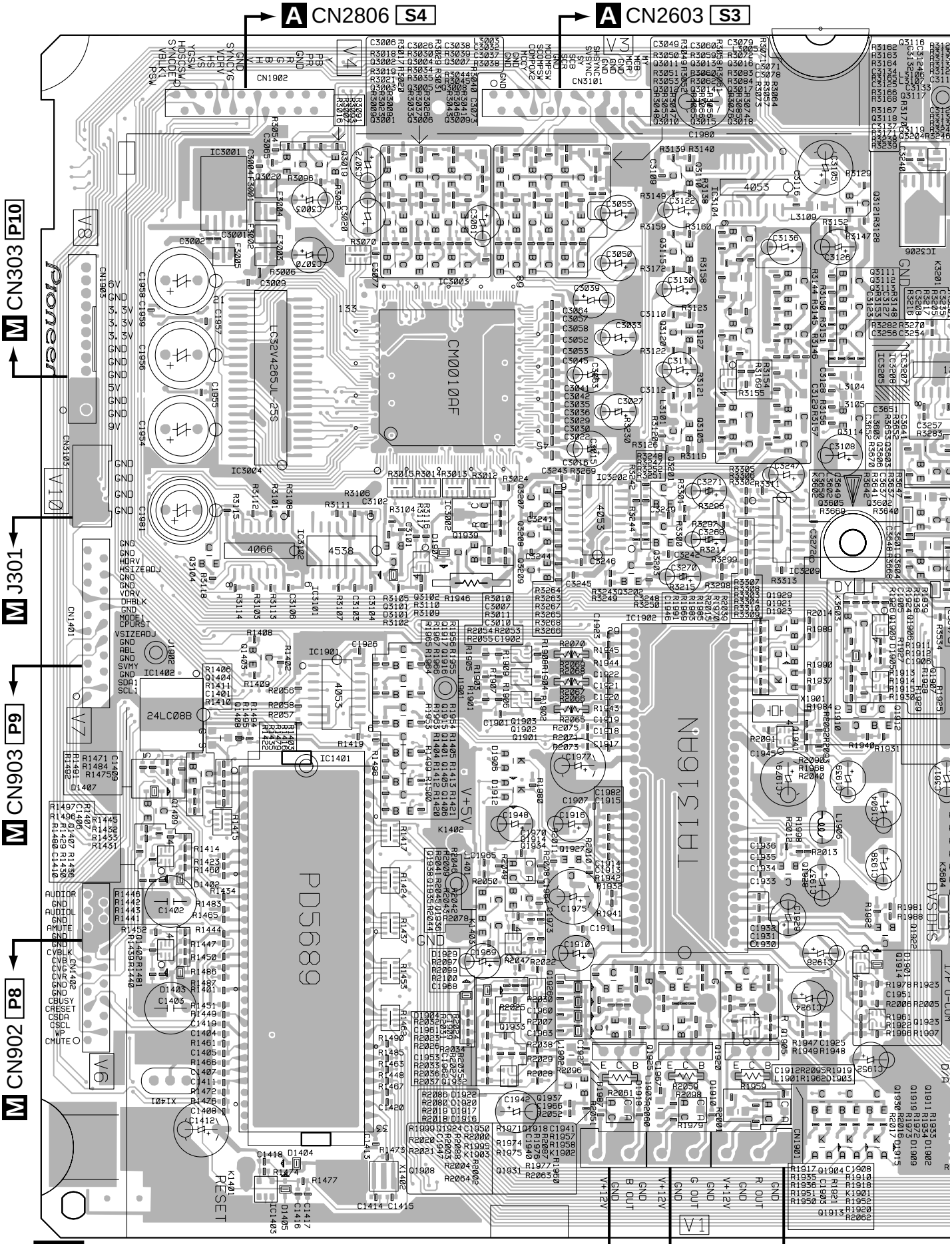

F VIDEO IP SERVICE ASSY

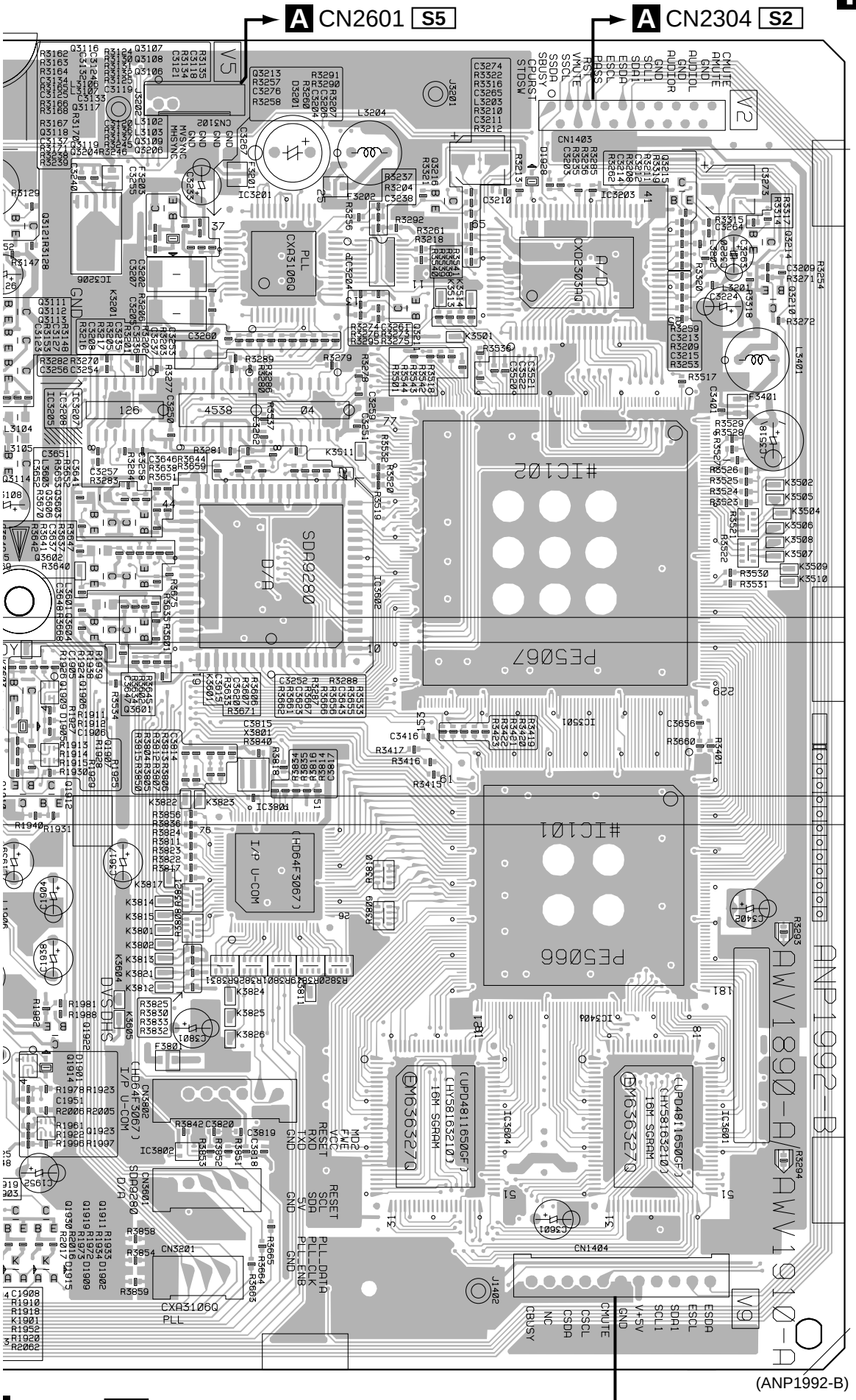

F VIDEO IP SERVICE ASSY

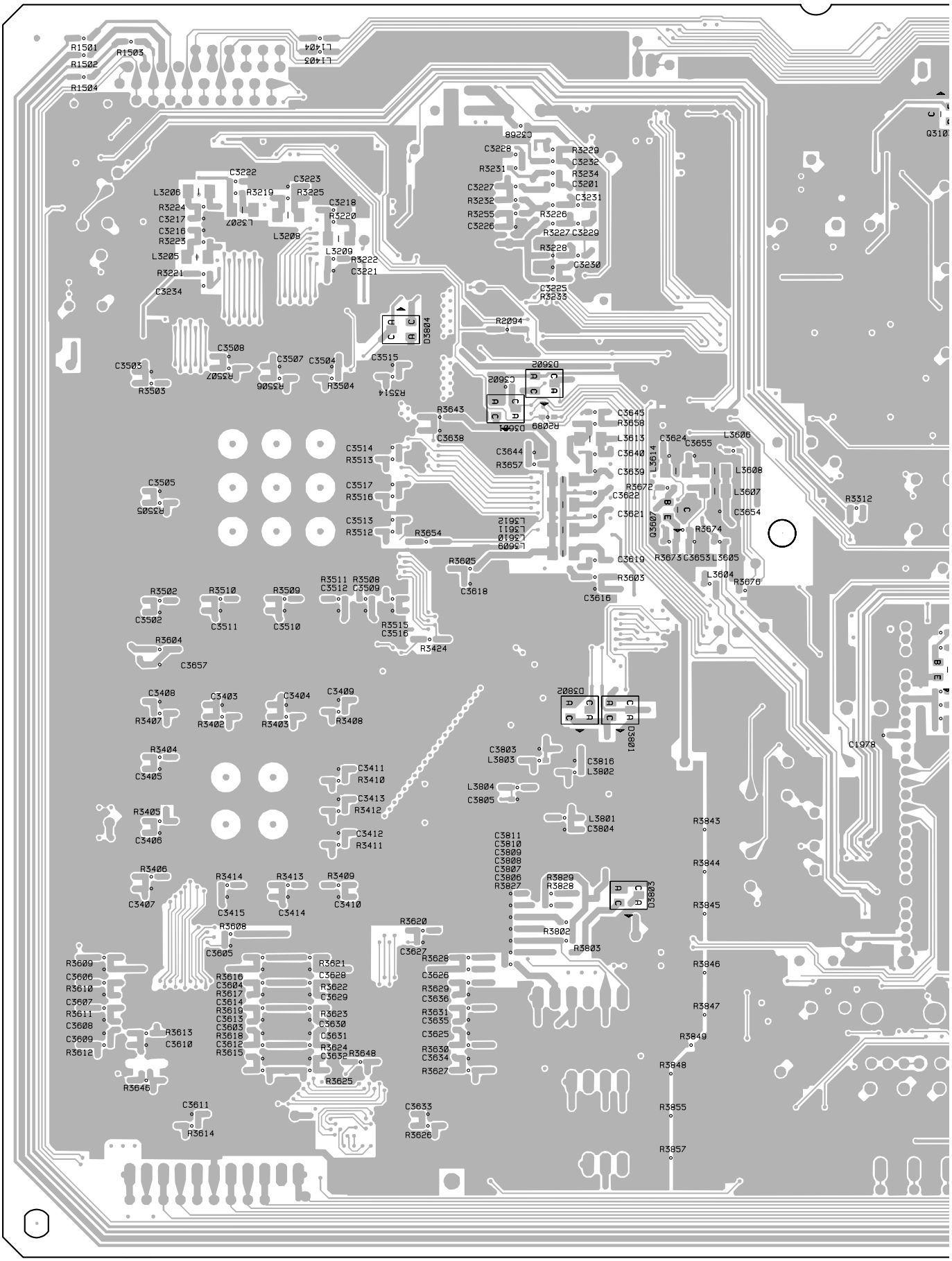

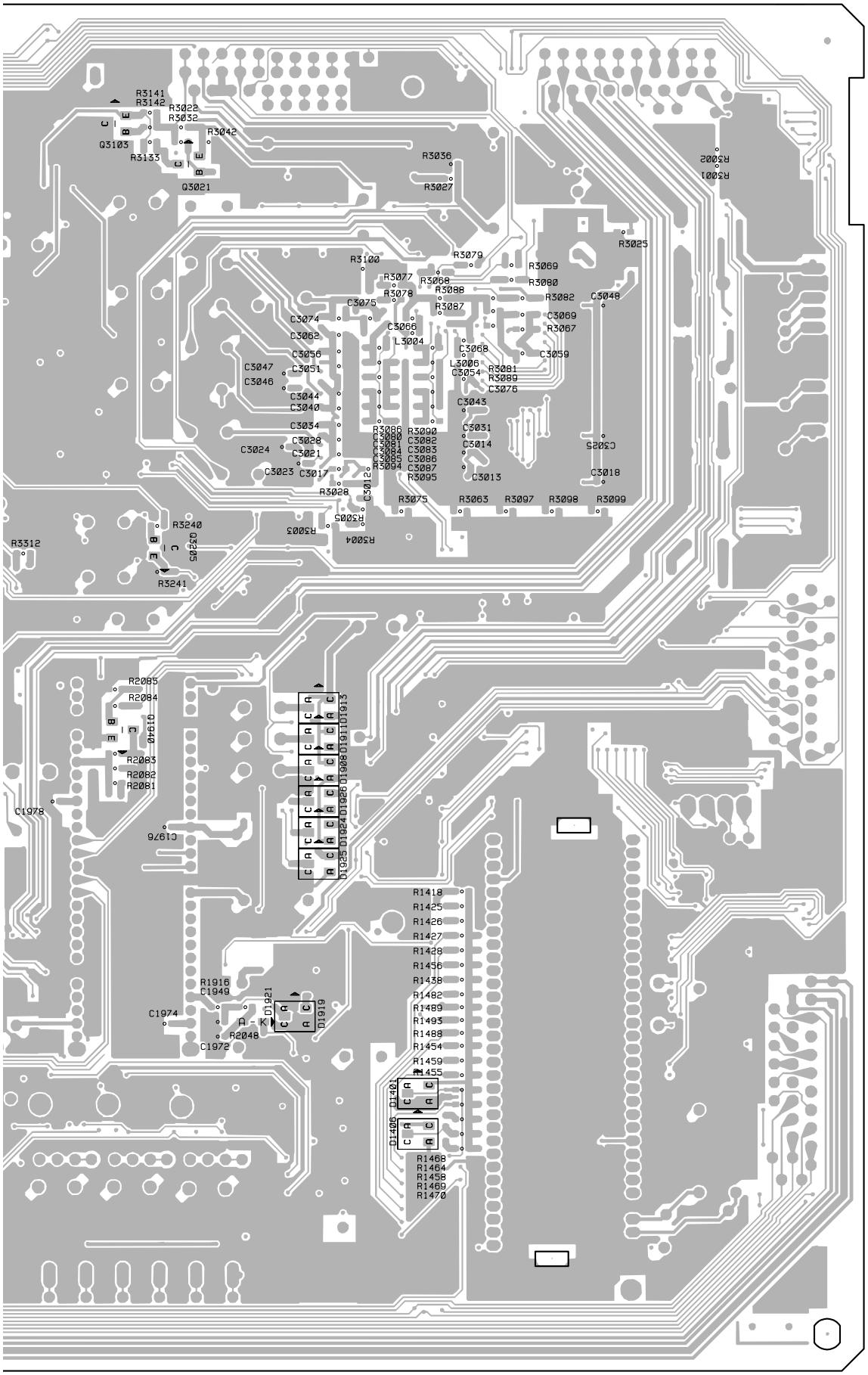

(ANP1992-B)

A
Q3103
Q3021
B
Q3205
Q3607
Q1940
C
D

SIDE B

4.4 R CRT DRIVE ASSY

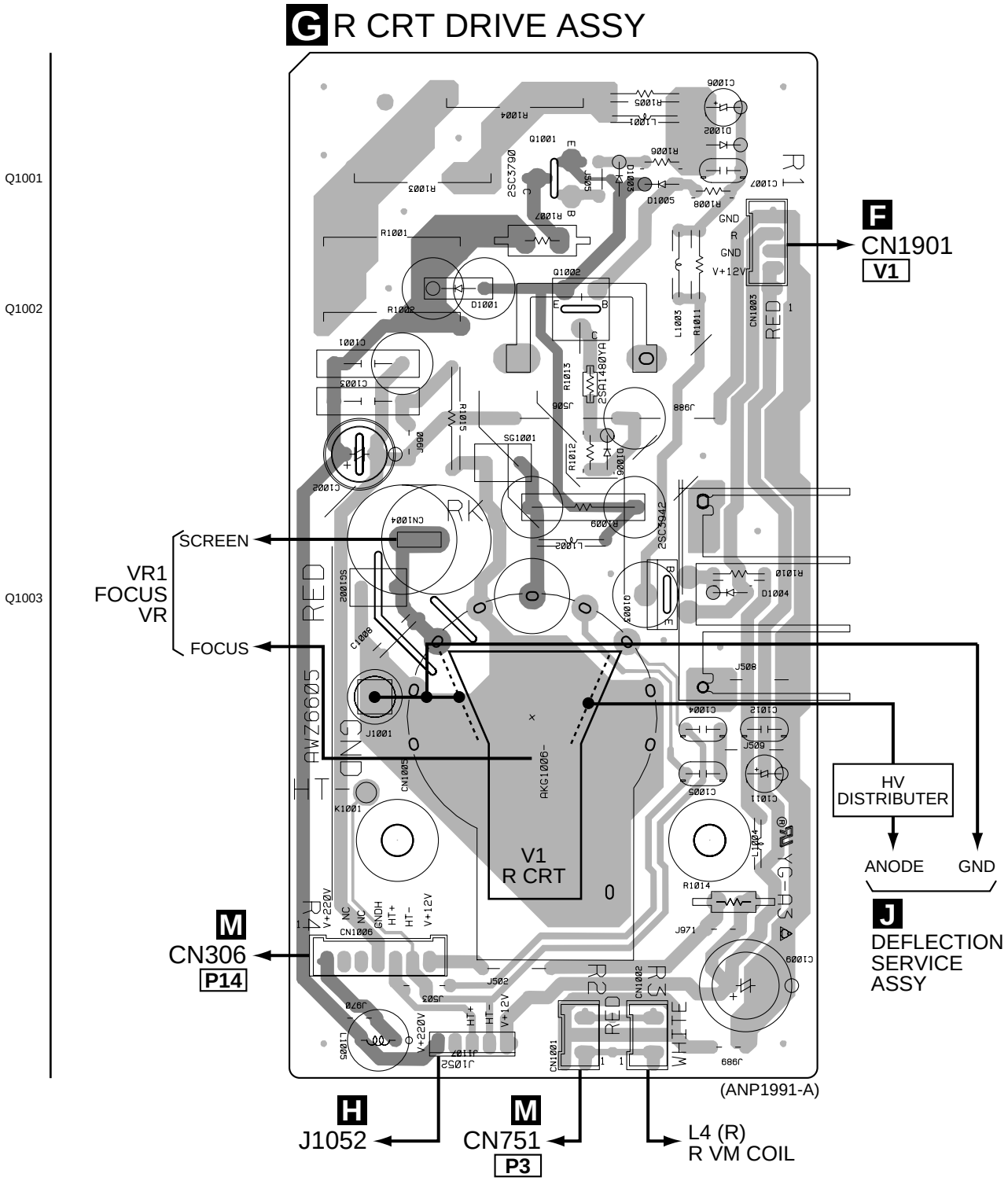

mark shows a high voltage generation point.

SIDE A

4.5 G CRT DRIVE ASSY

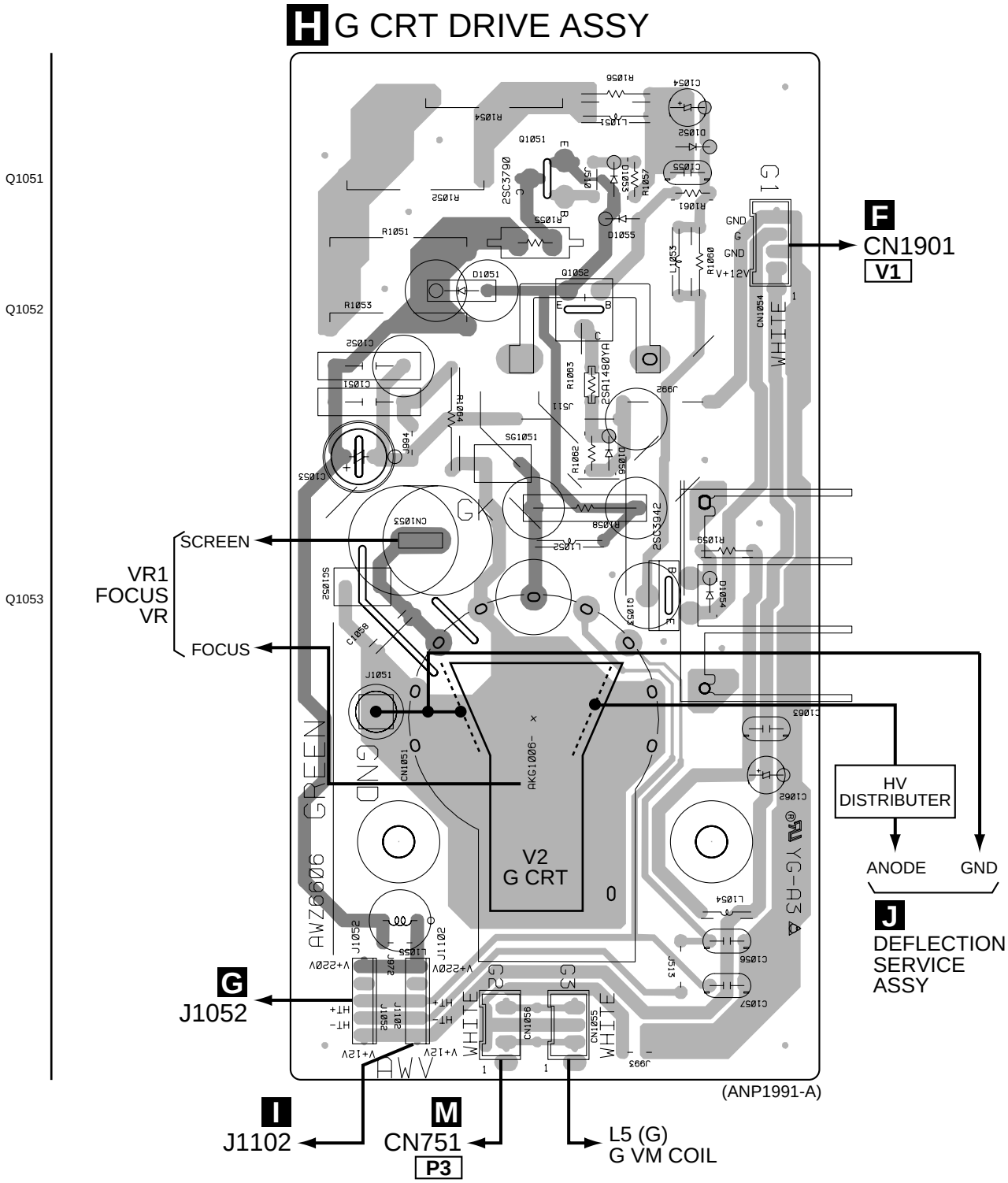

mark shows a high voltage generation point.

SIDE A

4.6 B CRT DRIVE ASSY

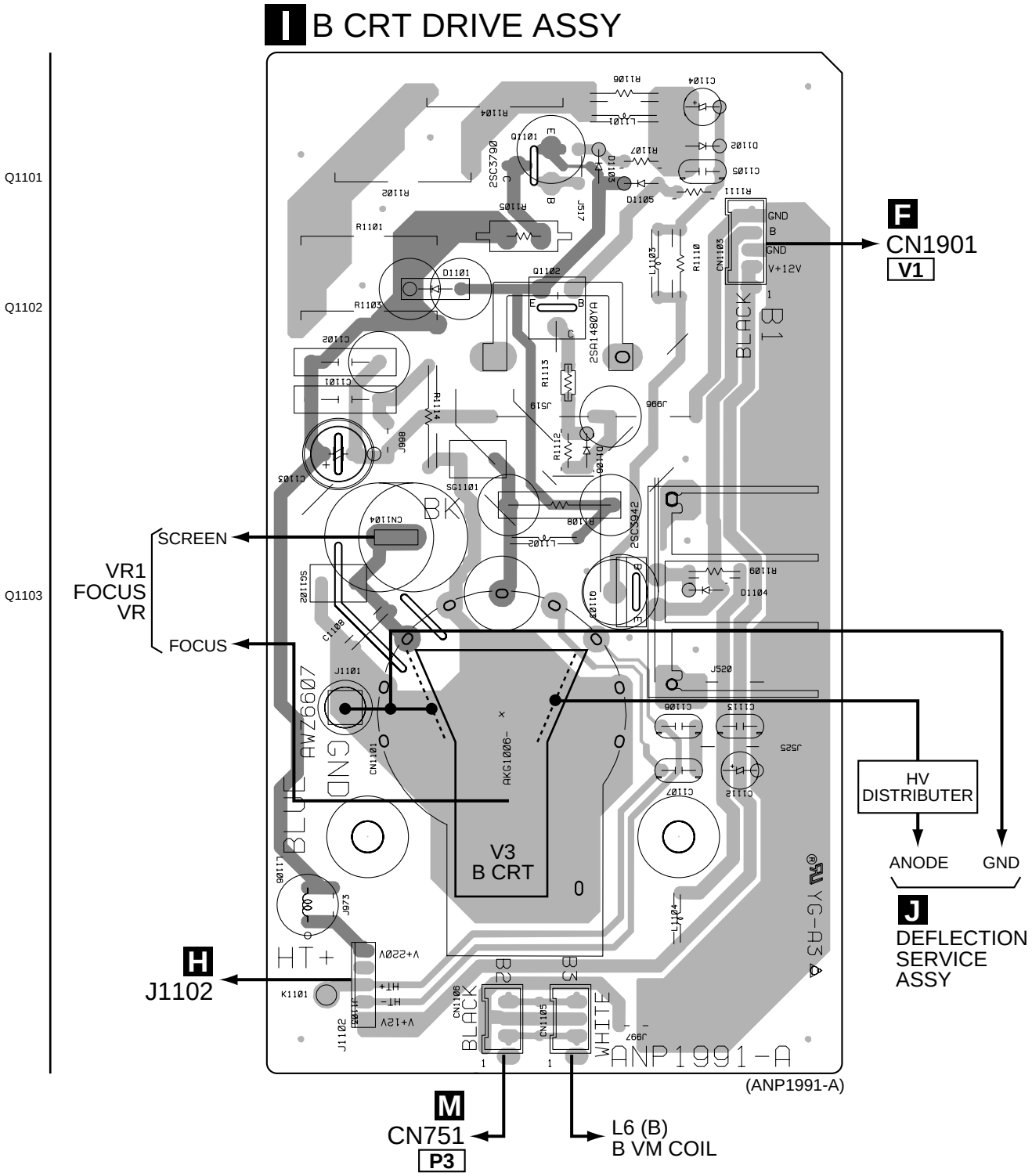

mark shows a high voltage generation point.

SIDE A

4.7 DIGITAL CONV. ASSY

K DIGITAL CONV. ASSY

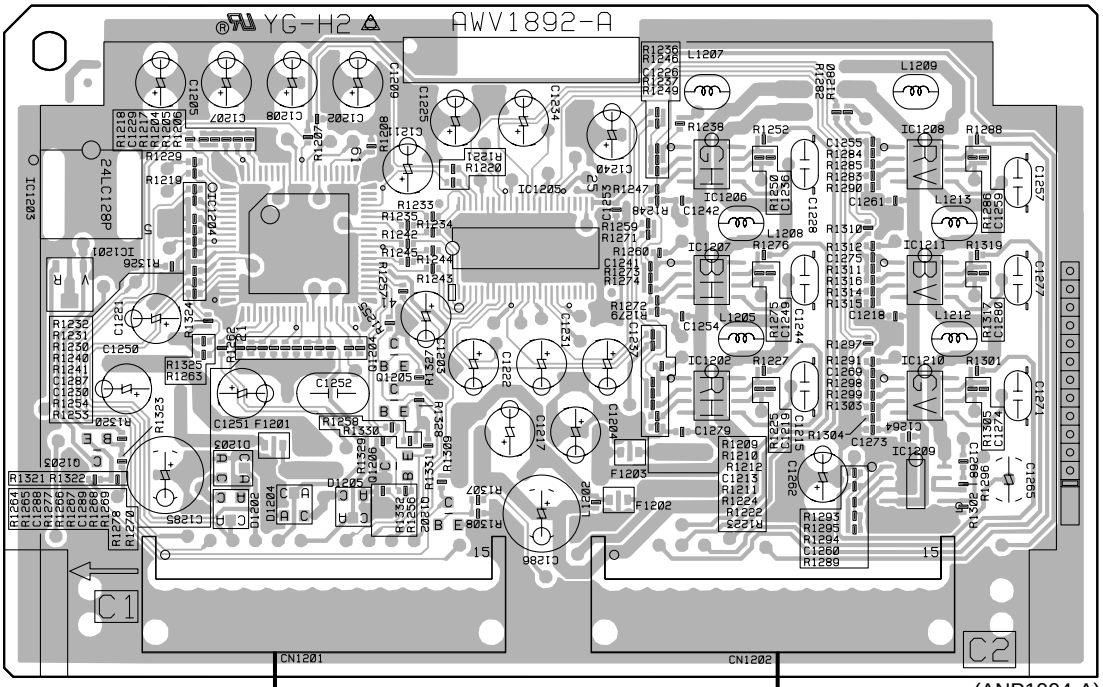

(ANP1994-A)

IC1206 IC1208
IC1203
IC1204 IC1205
IC1201 IC1207 IC1211
Q1204
Q1205 IC1202 IC1210
Q1203
Q1206 IC1209
Q1202

SIDE A

J CN406 D1

J CN405 D2

K DIGITAL CONV. ASSY

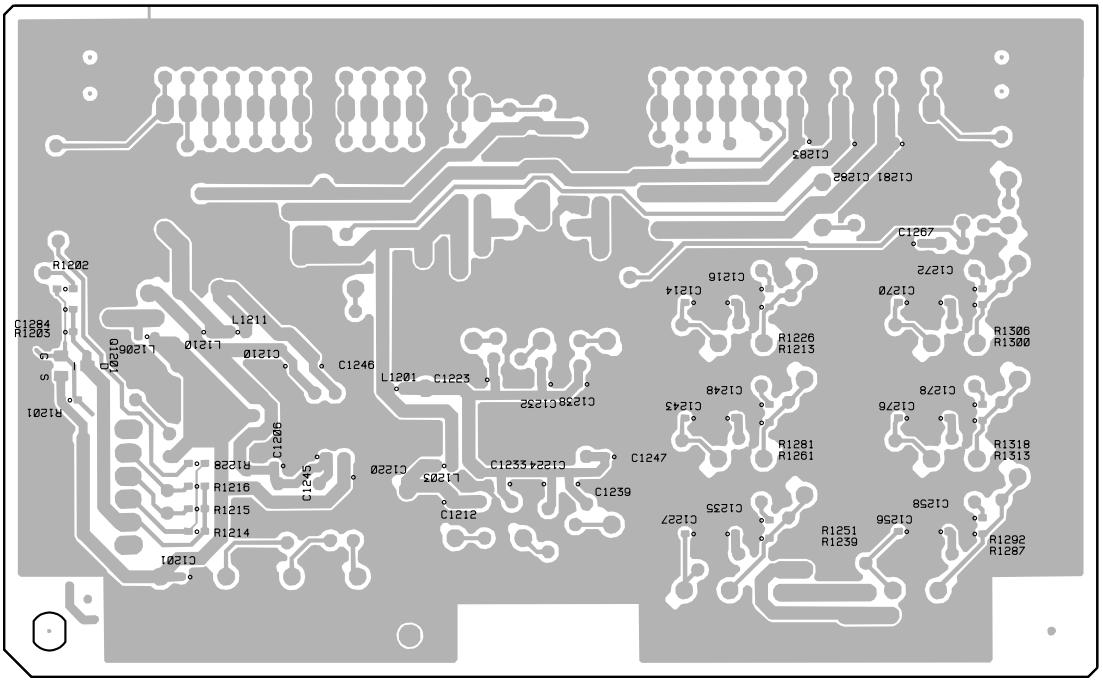

(ANP1994-A)

Q1201

SIDE B

4.8 DEFLECTION SERVICE ASSY

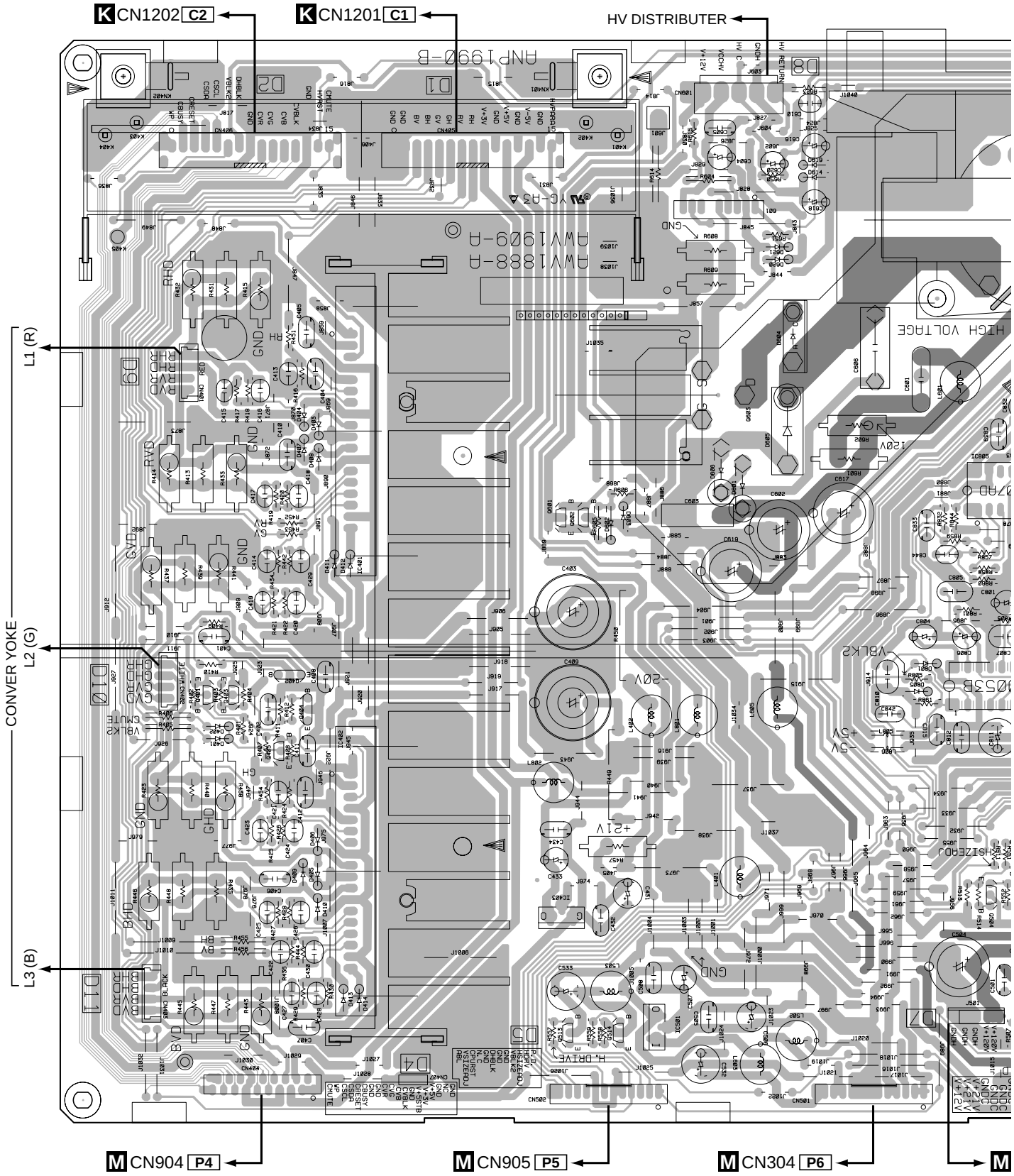

Q401 Q403 Q402 Q405 Q404 IC401 IC402 Q601 Q602 IC403 Q513 Q514 IC501 IC801 Q504

J DEFLECTION SERVICE ASSY

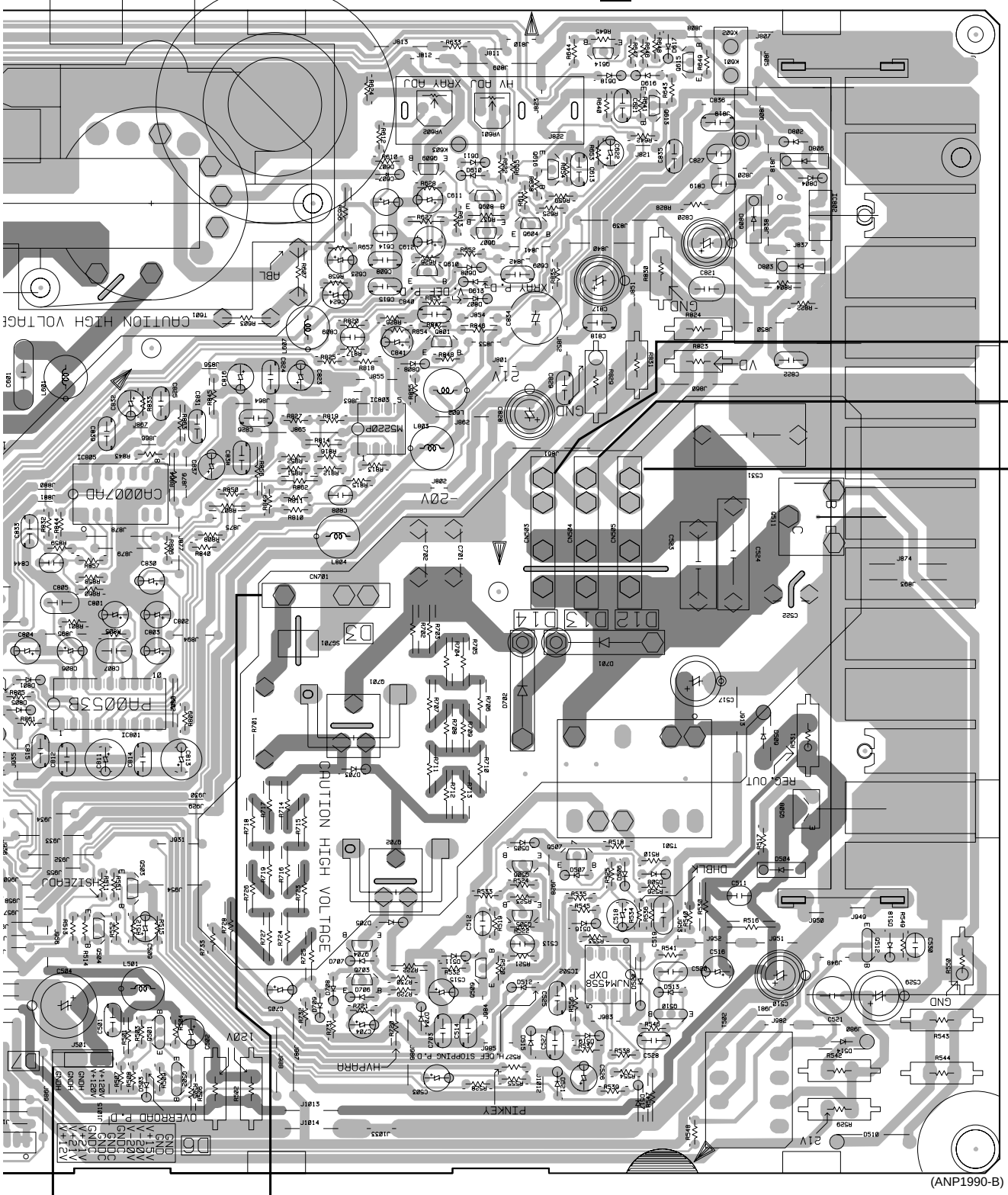

IC805
IC801 Q501
Q504 Q503 Q502

IC803 VR602 VR601 Q609 Q608
Q701 Q610 Q607 Q604 Q616 Q507 Q614 IC502 Q613 Q615 Q510
Q704 Q702 Q801 Q509 Q506
Q703 Q503

IC802 Q512
Q511

SIDE A

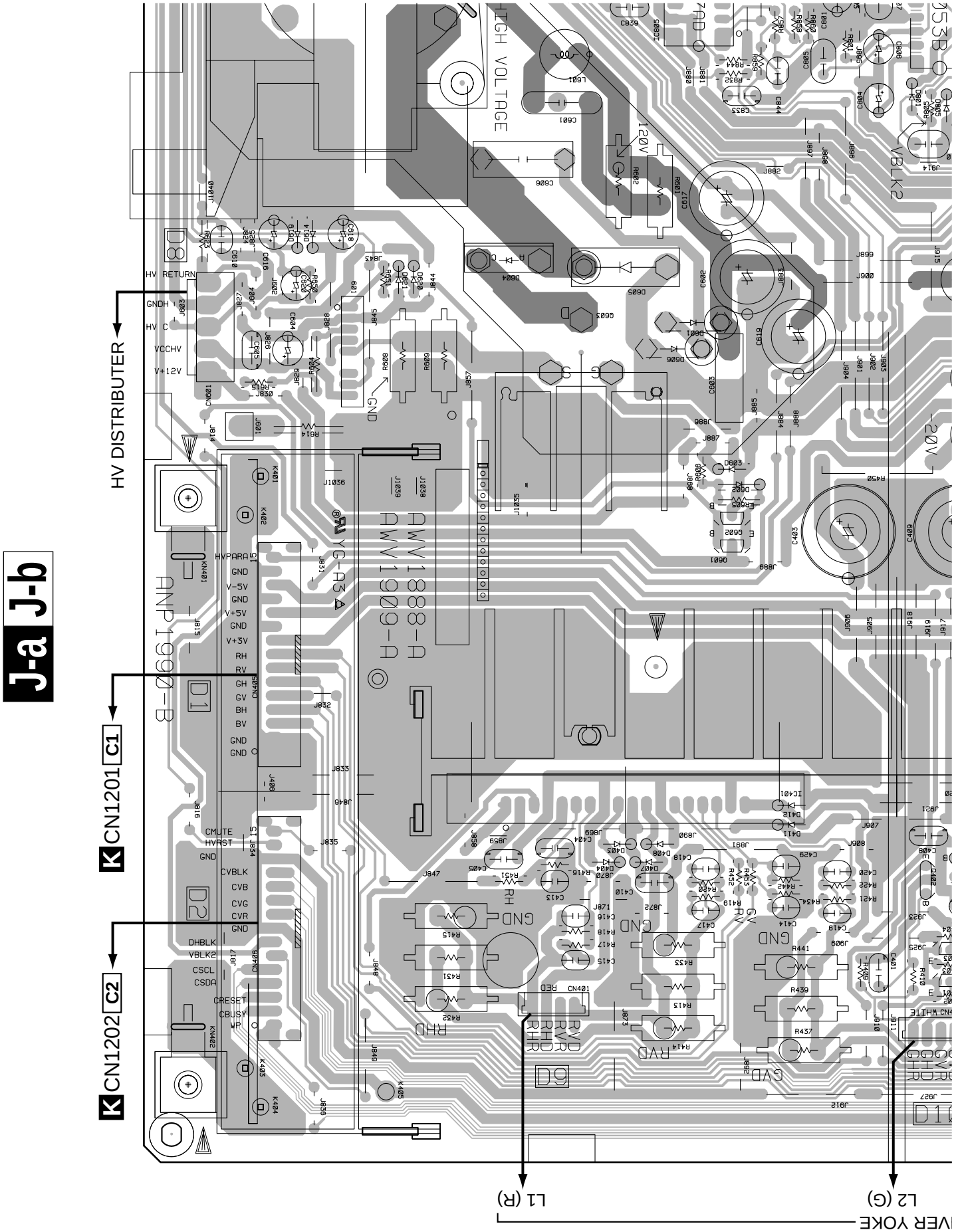
J-a J-b
HV DISTRIBUTER
K CN1201 C1
K CN1202 C2
L1 (R)
L2 (G)
HIGH VOLTAGE
HV RETURN
GNDH
HV C
VCCHV
V+12V
HVPARA
GND
V-5V
V+5V
V+3V
RH
RV
GH
GV
BH
BV
CMUTE
HVRST
CVBLK
CVB
CVG
CVR
DHBLK
VBLK2
CSCL
CSDA
CRESET
CBUSY
WP
ANP1690-B
DWV1888-A
DWV1609-A
YG-A2A
VBLK2
120V
220V
GND
RED
WHITE

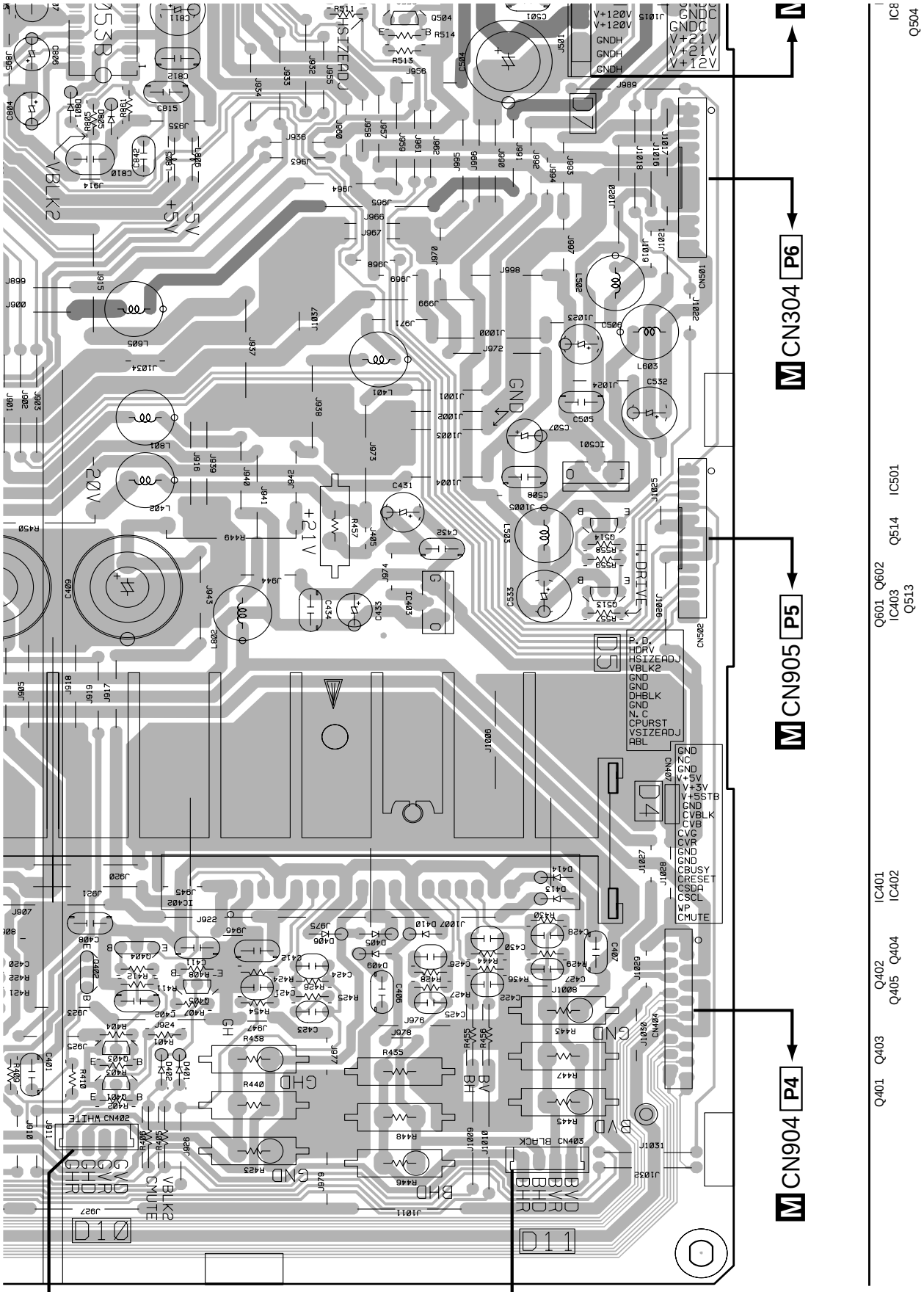
CN304 P6
CN905 P5
CN904 P4
CONVER YOKE
L3 (B)
L2 (G)
IC8
Q504
IC501
Q514
Q601 Q602
IC403
Q513
IC401
IC402
Q402
Q404
Q405
Q401
Q403
J-a J-b
SIDE A

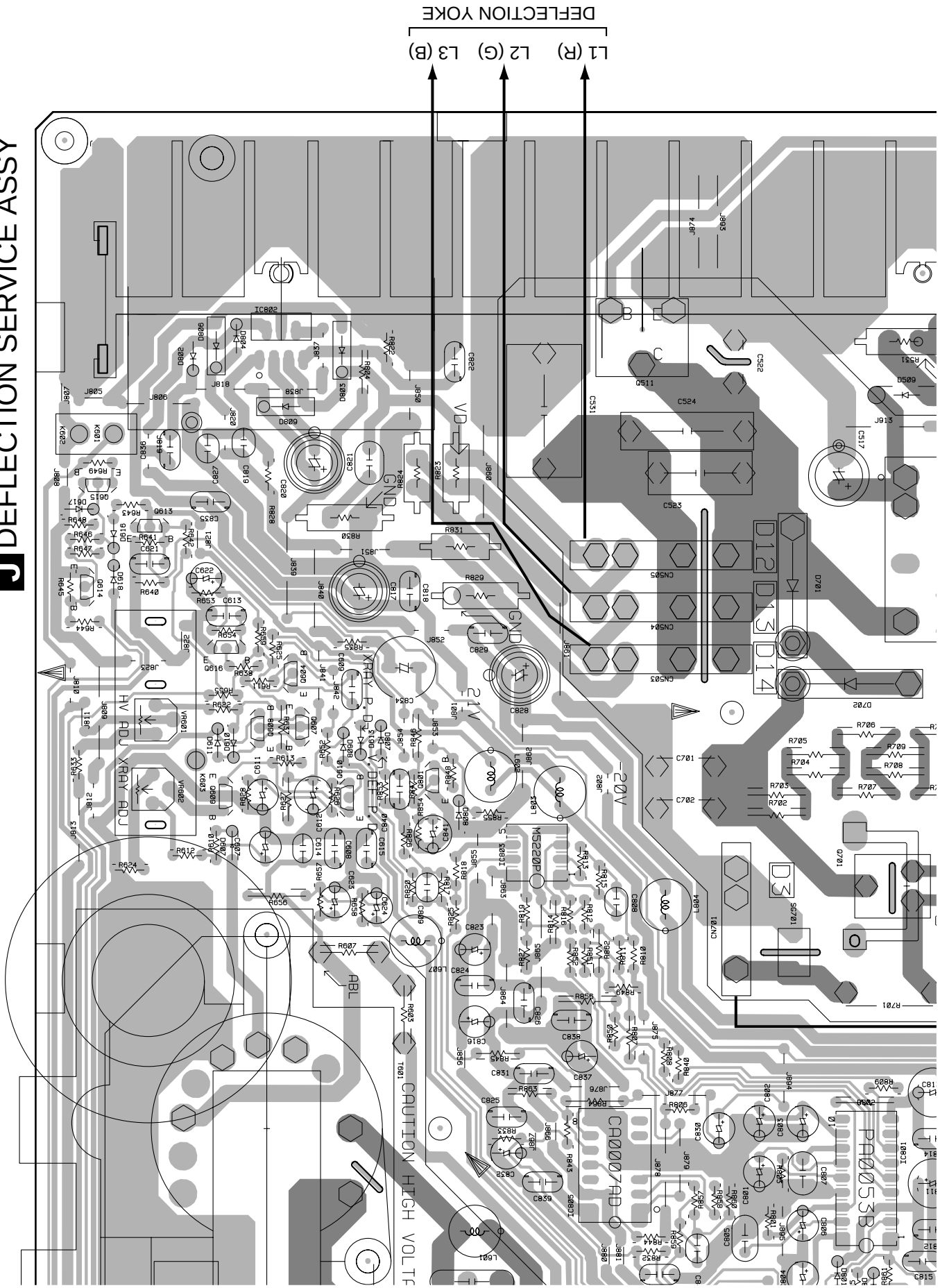
DEFLECTION YOKE
L1 (R)
L2 (G)
L3 (B)
J DEFLECTION SERVICE ASSY
J-a J-b
CAUTION HIGH VOLTAGE
XRAY ADJ
HV ADJ
ABL
VD
GND
-20V
21V
CA007AD
PA053B
M52001P

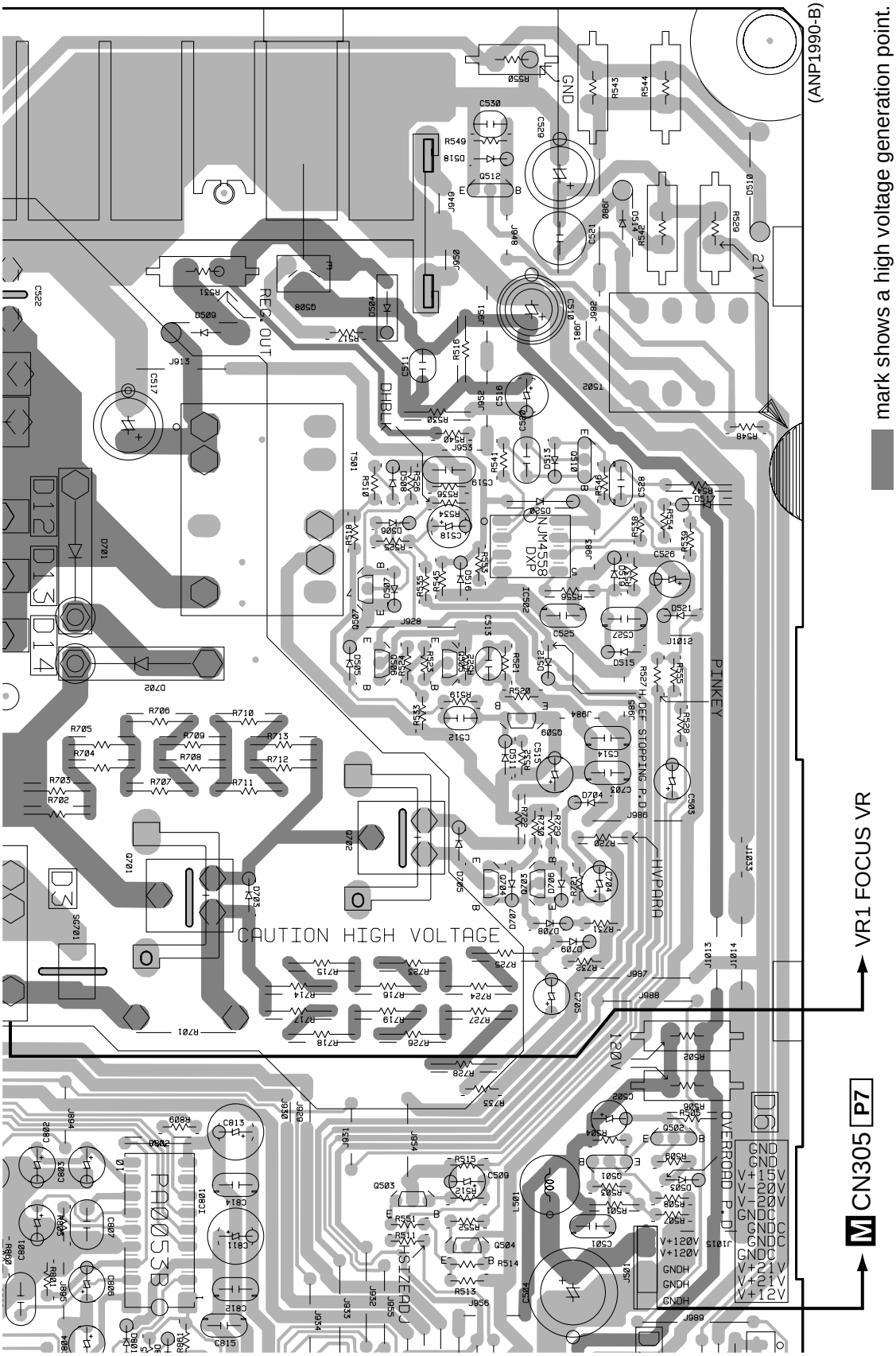
(ANP1990-B)
mark shows a high voltage generation point.
SIDE A
J-a J-b
VR1 FOCUS VR
CN305 P7
CAUTION HIGH VOLTAGE
PINKEY
HYPERD
OVERROAD P.D
GND
GND
V+15V
V-20V
V-20V
GNDC
GNDC
GNDC
GNDC
V+21V
V+21V
V+12V
GNDH
GNDH
GNDH
V+120V
V+120V
120V
21V
REC OUT
DHBLK
SIZEADJ
PD0053B
D12 D13 D14
IC802 Q512
Q511
Q613 Q615
Q510
Q614
IC502
Q616 Q507
Q604 Q506
Q608 Q503
Q607 Q509
VR601
VR602 Q609
Q610 Q801
IC803 Q702
Q701 Q704
Q703
IC805 Q501
IC801 Q502
Q504 Q503

4.9 POWER SUPPLY ASSY

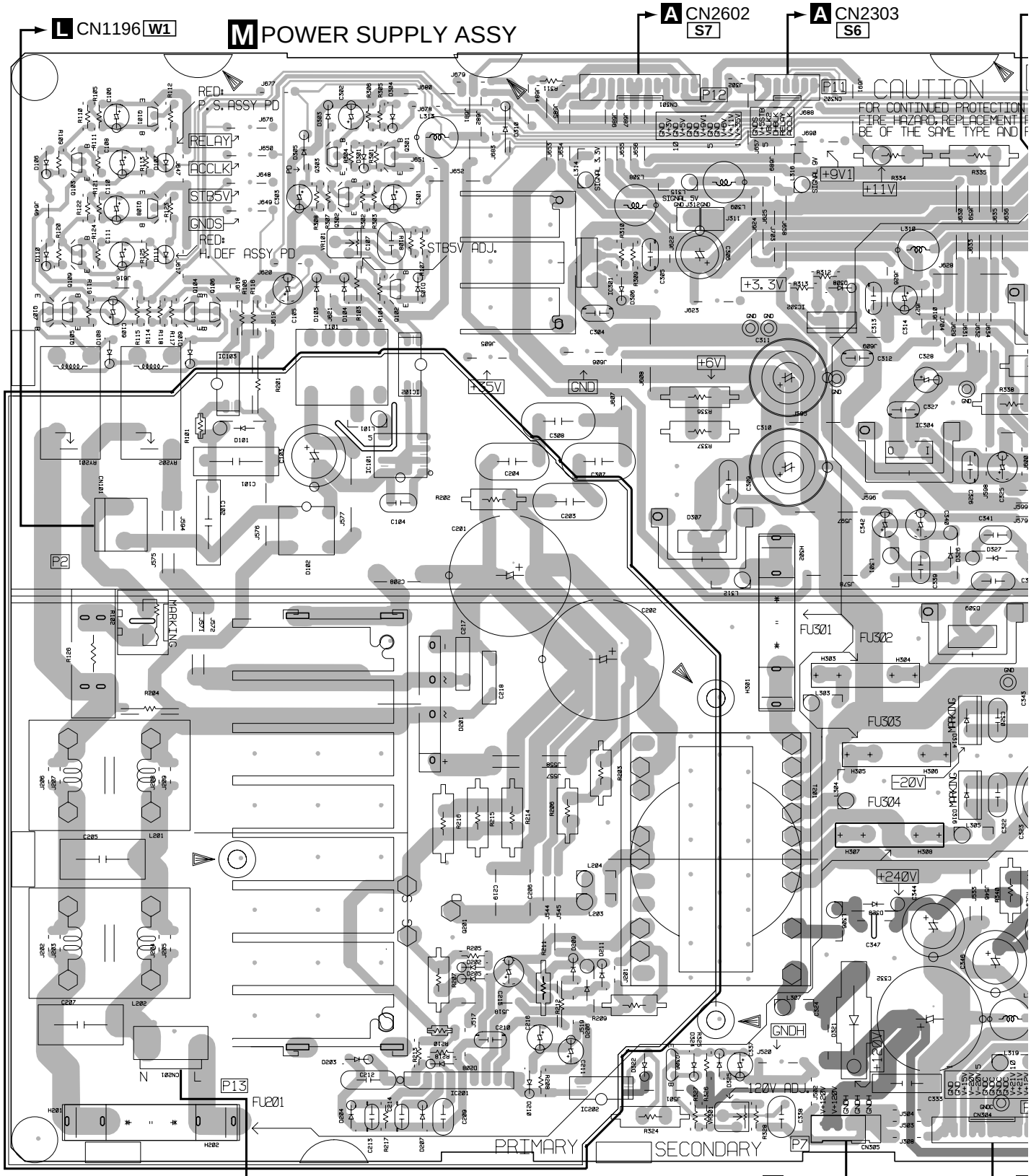

VR101 VR301

Q101 Q103-Q109 IC103 Q303 Q302 Q301 Q102 IC101 IC102 Q201 IC201 IC301 IC202 Q306 IC302 IC304 IC305 Q307

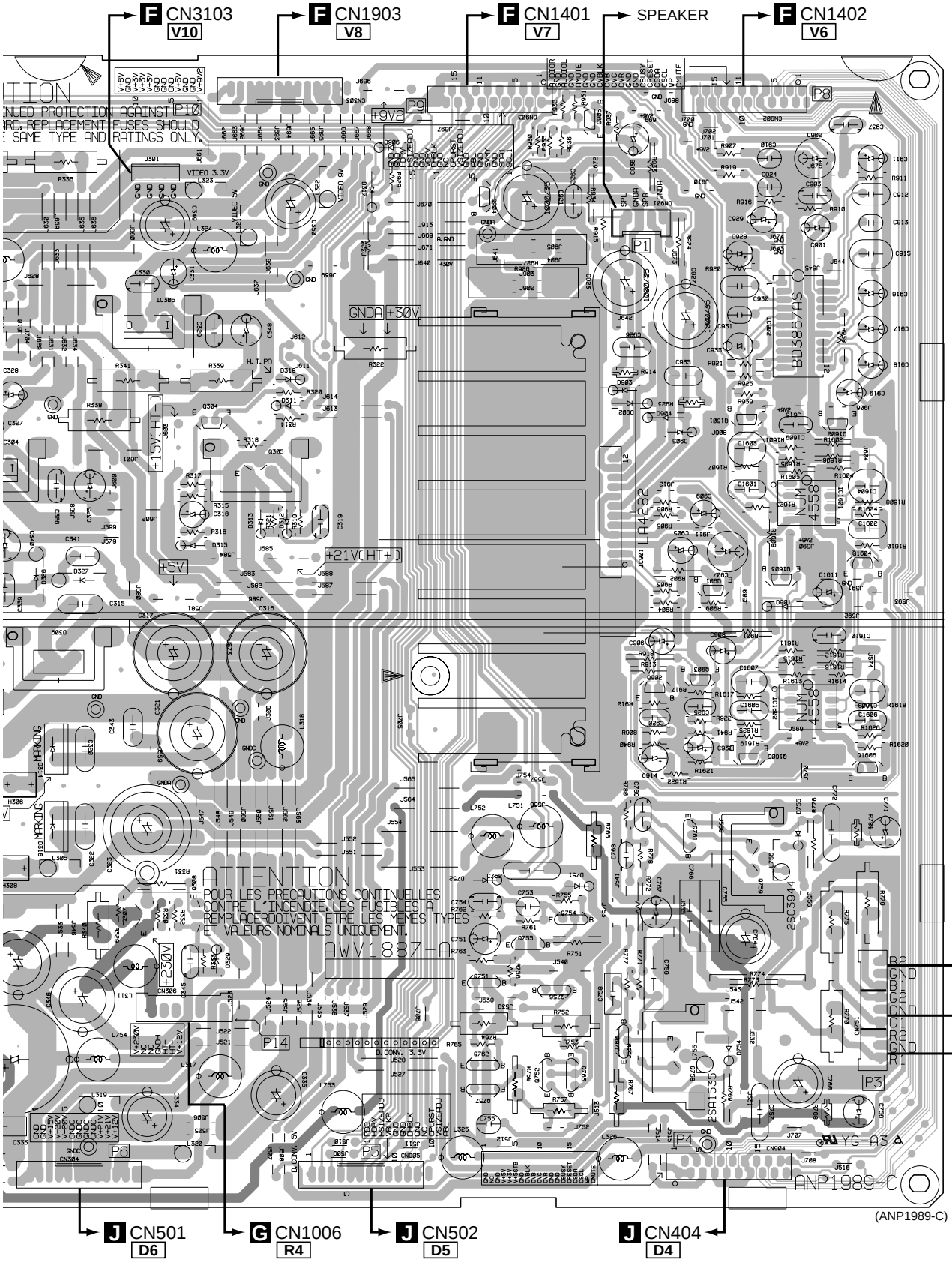

IC305 Q304 Q305
Q307 Q308

Q904 Q755 Q905 Q760 Q901-Q903 Q1601-Q1605 IC902 Q1608
Q751 Q756 Q754 Q758 Q761 Q759 IC1602 IC1601
Q762 Q752 Q763
Q757

SIDE A

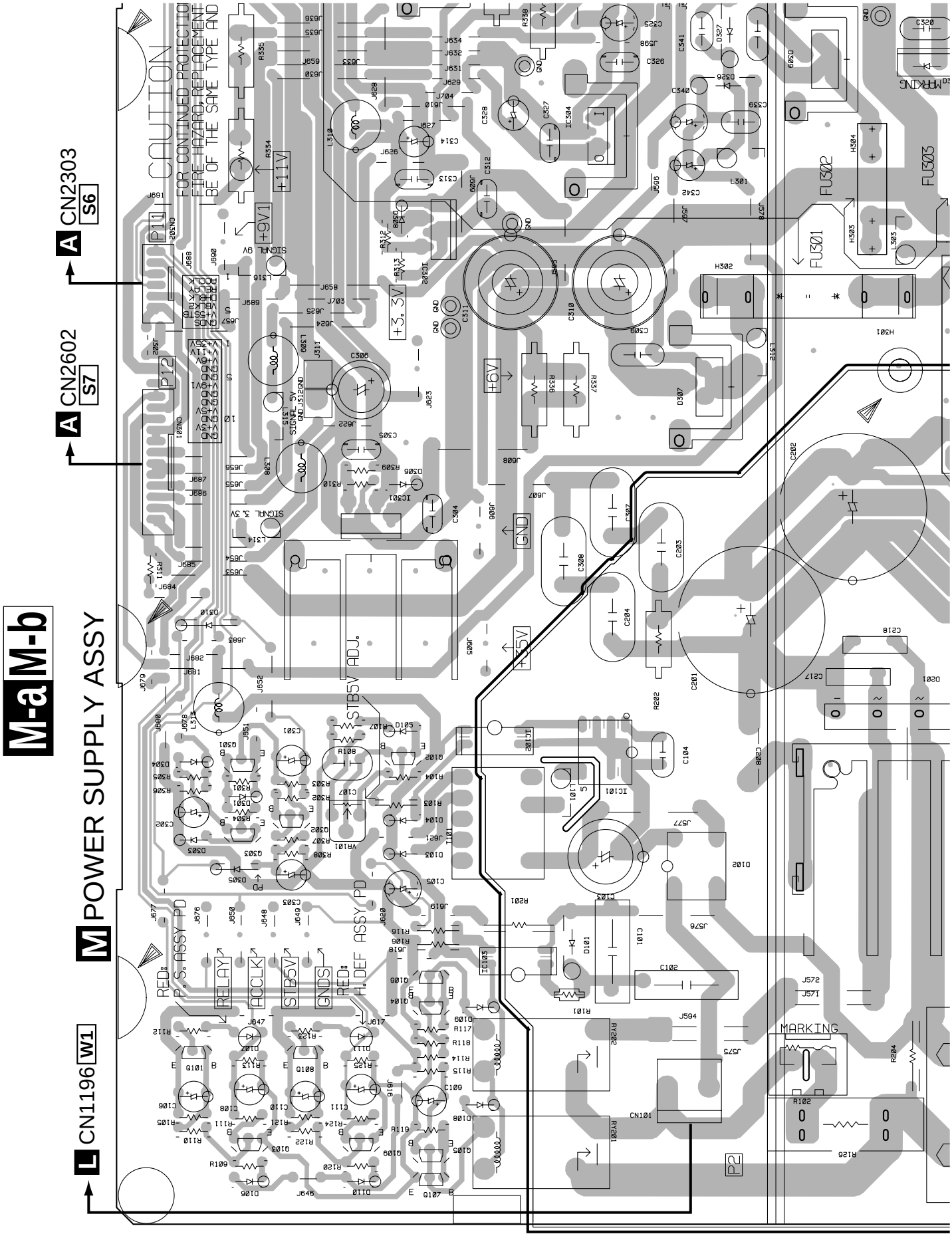
M-a M-b
M POWER SUPPLY ASSY
A CN2303 S6
A CN2602 S7
L CN1196 W1
CAUTION
FOR CONTINUED PROTECTION
FIRE HAZARD, REPLACEMENT
BE OF THE SAME TYPE AND
P.S. ASSY PD
H.DEF ASSY PD
RELAY
ACCLK
STB5V
GNDS
STB5V ADJ.
+9V1
+11V
+3.3V
+6V
+5V
GND
FU301
FU302
FU303
MARKING
P11
P12
P2

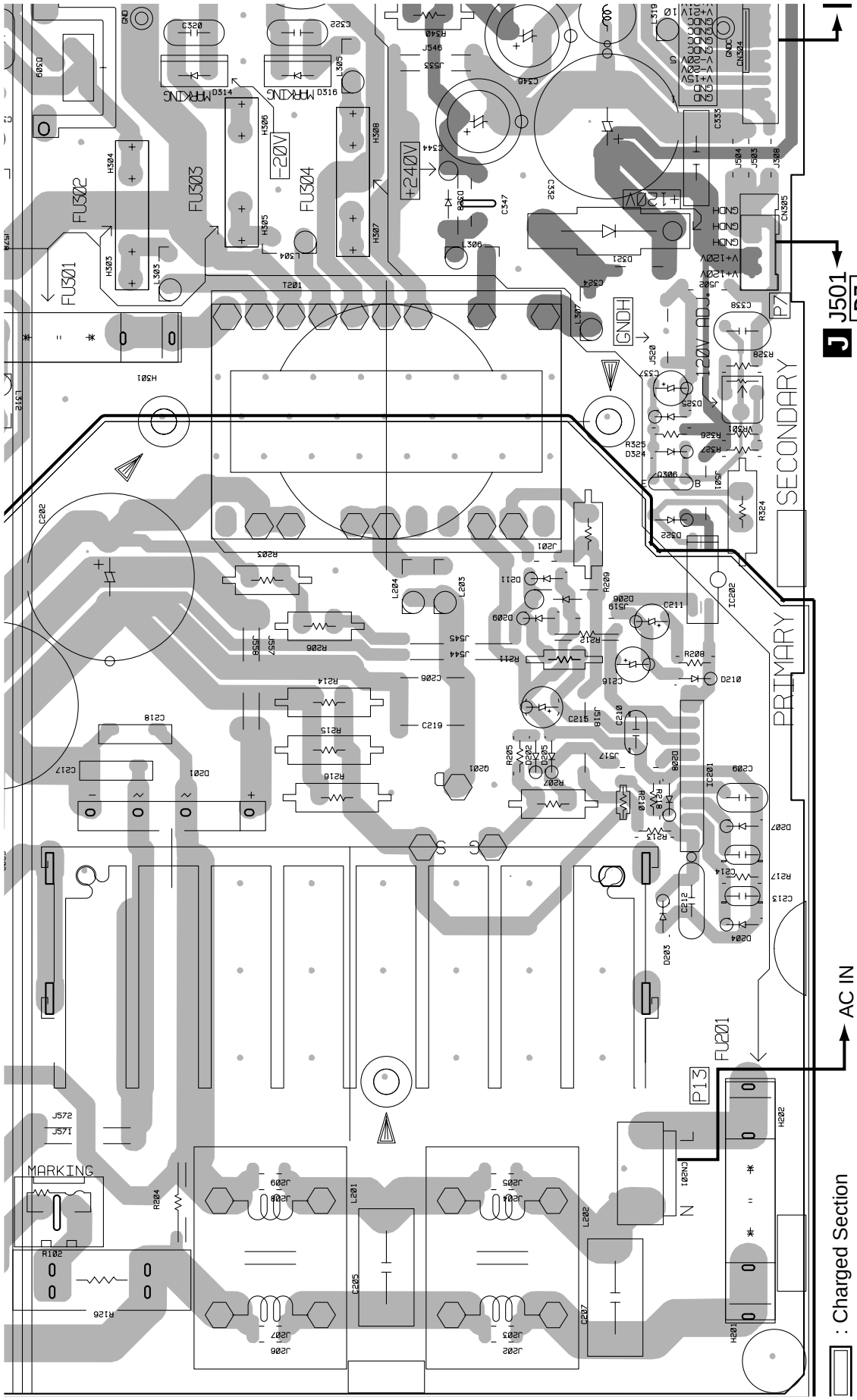
PRIMARY
SECONDARY
J J501
D7
AC IN
P13
FU201
P7
GNDH
+120V ADJ.
+240V
-20V
+120V
FU301
FU302
FU303
FU304
MARKING
: Charged Section
mark shows a high voltage generation point (excepting the charged section).
VR101
VR301
Q101 Q103-Q109 IC103 Q303 Q302 Q301 IC101 Q102 IC102 Q201 IC201 IC301 IC202 Q306 IC302 IC304 IC305 Q307

SIDE A

M-a M-b

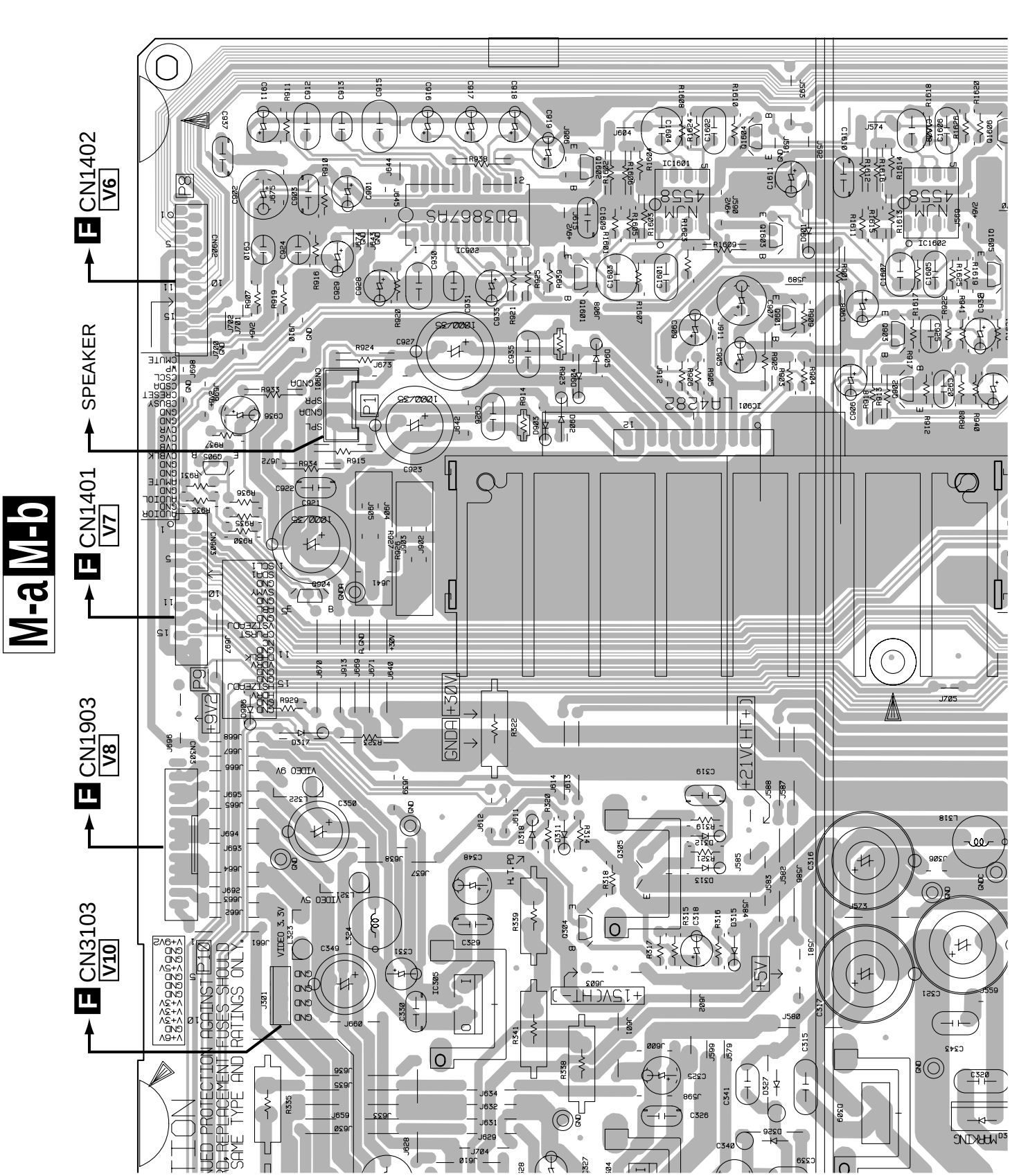
F CN1402 V6
SPEAKER
F CN1401 V7
F CN1903 V8
F CN3103 V10
M-a M-b
BD3867AS
LA4282
4558
NJM
IC1601
IC1602
IC901
IC902
+21V(HT+)
+15V(HT-)
+5V
GNDA
+30V
+9V2
VIDEO 9V
VIDEO 5V
VIDEO 3.3V
H.T.PD
MARKING

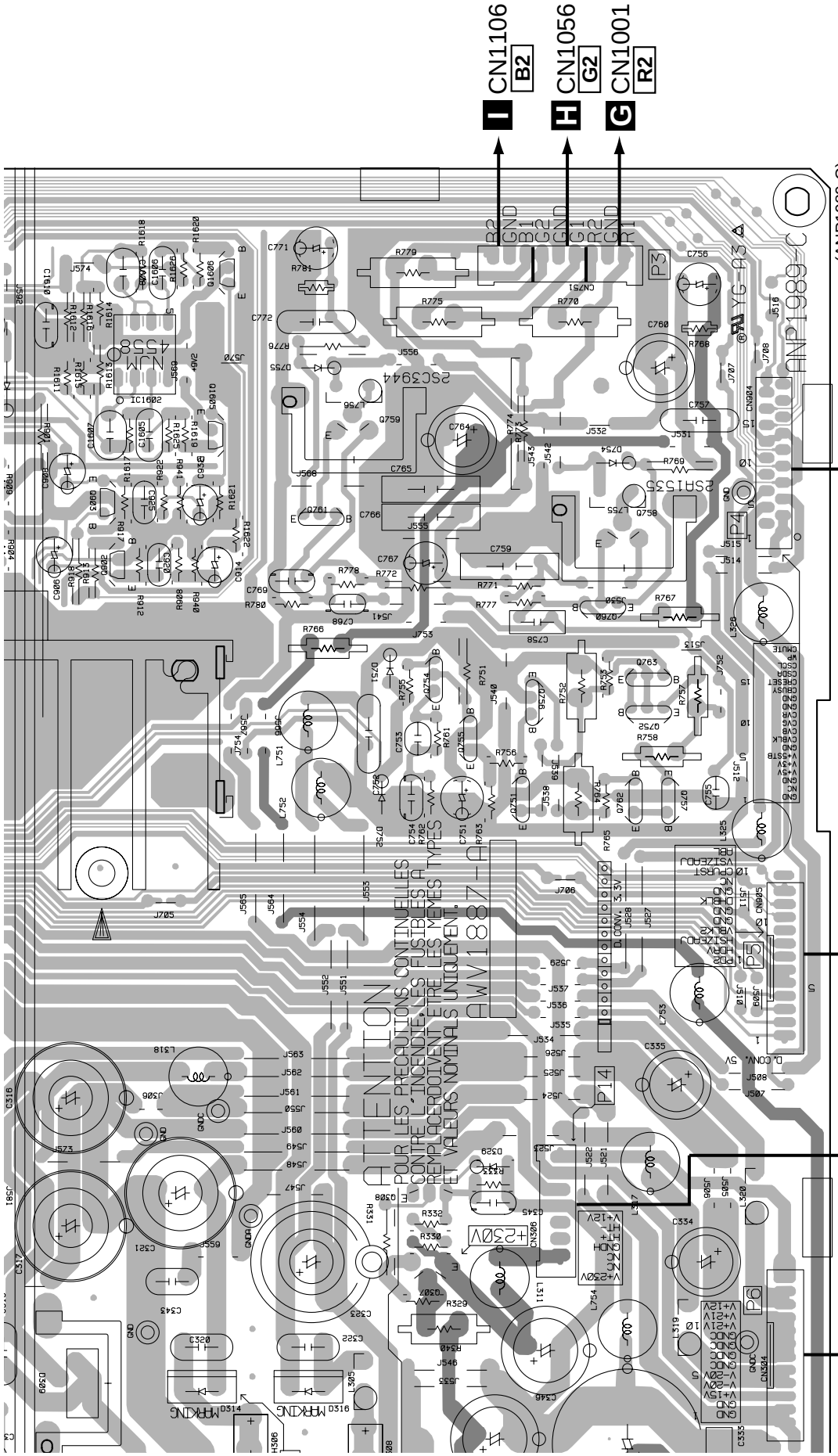

IC305	Q304	Q305	Q904	Q755	Q905	Q901-Q903	Q1601-Q1605	IC902	Q1608
Q307	Q308		Q751	Q756	Q754	Q760	Q758	Q759	Q761	IC1602	IC1601
			Q762	Q752	Q763						
			Q757								

SIDE A

M-a M-b

5. PCB PARTS LIST

NOTES:
- *Parts marked by "NSP" are generally unavailable because they are not in our Master Spare Parts List.*
- *The ⚠ mark found on some component parts indicates the importance of the safety factor of the part. Therefore, when replacing, be sure to use parts of identical designation.*
- *When ordering resistors, first convert resistance values into code form as shown in the following examples.*

  Ex.1 When there are 2 effective digits (any digit apart from 0), such as 560 ohm and 47k ohm (tolerance is shown by J=5%, and K=10%).

  560 Ω → 56 × 10¹ → 561 ..... RD1/4PU [5][6][1] J
  47k Ω → 47 × 10³ → 473 ..... RD1/4PU [4][7][3] J
  0.5 Ω → R50 ..... RN2H [R][5][0] K
  1 Ω → 1R0 ..... RS1P [1][R][0] K

  Ex.2 When there are 3 effective digits (such as in high precision metal film resistors).

  5.62k Ω → 562 × 10¹ → 5621 ..... RN1/4PC [5][6][2][1] F
- *Parts marked by ☆ are important parts which relate in X-rays radiation. If any of these parts need to be replaced, always replace with specified parts.*
- *Parts marked by × are important parts which relate in X-rays radiation. If a failure occurs in any of these parts, replace the printed circuit board assembly where the relevant part has already been adjusted as a working component. Do not replace the actual part itself. If any part marked by × is replaced, there is danger of being exposed to X-rays.*

LIST OF ASSEMBLIES

Mark	No.	Description	Part No.
NSP		CRT DRIVE ASSY	AWV1889
		├ R CRT DRIVE ASSY	AWZ6605
		├ G CRT DRIVE ASSY	AWZ6606
		├ B CRT DRIVE ASSY	AWZ6607
		├ FRONT LED ASSY	AWZ6608
		├ FRONT INPUT ASSY	AWZ6609
		├ REMOTE SENSOR ASSY	AWZ6610
		├ POWER SW ASSY	AWZ6611
		└ SHORT ASSY	AWZ6612
		SIGNAL ASSY	AWV1891
		VIDEO IP SERVICE ASSY	AWV1910
		POWER SUPPLY ASSY	AWV1887
	☆	DEFLECTION SERVICE ASSY	AWV1909
		DIGITAL CONV. ASSY	AWV1892

A SIGNAL ASSY

SEMICONDUCTORS

Mark	No.	Description	Part No.
		IC2102	PQ05DZ51
		IC2101	PQ09DZ11
		IC2301	24LC32A(I)P
		IC2302	PD5688A9
		IC2303	PST9246N
		IC2503	IS41C16256-35K
		IC2501	UPD64082GF-3BA
		IC2602	NJM2233BM
		IC2601	TA1270BF
		IC2702	CXA2019AQ
		IC2701	NJM2233BM
		IC2703,IC2804	NJM2283M
		IC2801	CXA2079Q
		IC2802	M52065FP
		IC2401	HG62G010R29FB
		IC2402	TC74HC14AF
		IC2403	TC74HC4040AF
		IC2404	TLC2932IPW
		IC3901	M52347FP-TFB
		IC3903	TC74HC4066AF
		IC3902	TC74HC4538AF
		Q2101,Q2107,Q2108,Q2204	2SA1162
		Q2304,Q2308,Q2312	2SA1162
		Q2502,Q2507,Q2509,Q2511	2SA1162
		Q2513,Q2603,Q2606,Q2703	2SA1162
		Q2802,Q2803,Q2814	2SA1162
		Q3914,Q3918	2SA1162
		Q2102,Q2104,Q2110,Q2205	2SC2712
		Q2303,Q2307,Q2309-Q2311	2SC2712
		Q2313,Q2314	2SC2712
		Q2504,Q2506,Q2512,Q2514	2SC2712
		Q2515,Q2607,Q2608	2SC2712
		Q2702,Q2704-Q2706	2SC2712
		Q2804-Q2807,Q2811-Q2813	2SC2712
		Q2827-Q2835	2SC2712
		Q3902-Q3908,Q3910-Q3912	2SC2712
		Q3915-Q3917	2SC2712
		Q2301	2SJ461
		Q2302,Q2306,Q2503	HN1B04FU
		Q2602,Q2701	HN1B04FU
		Q3901,Q3909,Q3919	HN1B04FU
		Q3920	HN1C01FU
		Q2305,Q2501,Q2505	HN1C01FU
		Q2707-Q2709	2SC4213
		Q2801	HN1A01FU
		D2101	1SS352
		D2307-D2309,D2313-D2320	1SS352
		D2837-D2840,D3903,D3904	1SS352
		D2102	UDZ30B
		D2301-D2304,D2311,D2312	1SS226
		D2801-D2805,D2808-D2836	1SS226
		D3901,D3902,D3905,D3906	1SS226
		D2305,D2306	UDZS6.8B

COILS

Mark	No.	Description	Part No.
		L2101,L2102	ATX1008
		L2201,L2202	ATX1008
		F2502,F2503	ATF1194
		L2510,L2511	ATH1108
		L2509	LFEA4R7J

Mark	No.	Description	Part No.
	L2401,L2402		QTL1013
	L2506,L2507,L2513		QTL1013
	L2504,L2505,L2601,L2602		LFEA220J
	L2701,L2801,L2404		LFEA220J

CAPACITORS

	C2126,C2127		CCSRCH100D50
	C2117		CCSRCH470J50
	C2102,C2104,C2106,C2110		CEAT100M50
	C2113		CEAT471M10
	C2109		CEAT471M6R3
	C2118,C2119		CKSRYB102K50
	C2101,C2105,C2108,C2111,C2112		CKSRYB103K50
	C2116,C2120,C2122,C2123,C2125		CKSRYB103K50
	C2216		CCSRCH470J50
	C2206,C2211		CEAT100M50
	C2214		CEAT471M10
	C2210		CEAT471M6R3
	C2217,C2218		CKSRYB102K50
	C2209,C2212,C2213,C2215		CKSRYB103K50
	C2306		CCSRCH221J50
	C2317		CEAT101M16
	C2318		CEAT102M6R3
	C2325		CEAT470M16
	C2323,C2326		CEAT4R7M50
	C2307,C2314		CKSRYB102K50
	C2303,C2308,C2311,C2313,C2322		CKSRYB103K50
	C2305		CKSRYB104K16
	C2315		CKSRYB472K50
	C2310		CKSRYB561K50
	C2301,C2302,C2309,C2312,C2316		CKSRYF104Z16
	C2319-C2321,C2324, C2327		CKSRYF104Z16
	C2522		CCSRCH121J50
	C2513		CCSRCH180J50
	C2557		CCSRCH270J50
	C2541		CCSRCH330J50
	C2556		CCSRCH391J50
	C2534,C2542		CCSRCH470J50
	C2514		CCSRCH680J50
	C2535,C2543		CCSRCH820J50
	C2521		CEAT101M16
	C2536,C2544,C2548,C2551		CEAT102M6R3
	C2505,C2525		CEAT1R0M50
	C2517		CEAT470M16
	C2545		CEAT471M6R3
	C2506		CKSRYB102K50
	C2508,C2512,C2555		CKSRYB103K50
	C2502,C2507,C2509-C2511		CKSRYF104Z16
	C2515,C2516,C2518-C2520,C2524		CKSRYF104Z16
	C2526,C2527,C2529-C2533		CKSRYF104Z16
	C2537,C2538,C2540,C2546		CKSRYF104Z16
	C2549,C2550,C2552,C2554		CKSRYF104Z16
	C2626		CCSRCH120J50
	C2619		CCSRCH220J50
	C2623,C2624		CEAT100M50
	C2604,C2611		CEAT102M6R3
	C2630,C2633		CEAT2R2M50
	C2608		CEAT471M10
	C2605,C2622,C2635		CEAT471M16
	C2628		CEATR22M50
	C2613		CKSQYB474K16
	C2629		CKSRYB103K50
	C2609,C2610,C2614-C2618,C2631		CKSRYB104K16
	C2627		CKSRYB222K50
	C2606,C2607,C2612,C2620,C2621		CKSRYF104Z16
	C2625,C2634		CKSRYF104Z16
	C2632		CQMA223J50
	C2732		CCSRCH101J50
	C2725		CCSRCH120J50
	C2717		CCSRCH471J50
	C2701,C2702,C2714-C2716		CEAT100M50
	C2719,C2720,C2722		CEAT100M50
	C2705,C2708		CEAT1R0M50
	C2727-C2729		CEAT220M50
	C2711,C2723		CEAT470M16
	C2726		CEAT471M16
	C2712		CEAT4R7M50
	C2706,C2713,C2718		CEATR47M50
	C2704		CKSRYB103K50
	C2707		CKSRYB472K50
	C2703,C2709,C2710,C2721,C2724		CKSRYF104Z16
	C2850-C2852,C2854-C2857,C2867		CEAT100M50
	C2872,C2877		CEAT100M50
	C2801		CEAT102M6R3
	C2803-C2805,C2810,C2818,C2819		CEAT1R0M50
	C2823,C2824,C2827,C2828		CEAT1R0M50
	C2844,C2845		CEAT1R0M50
	C2808,C2809,C2811-C2814,C2816		CEAT220M50
	C2822,C2825,C2829-C2831,C2833		CEAT220M50
	C2838-C2841,C2866,C2871,C2876		CEAT220M50
	C2882		CEAT220M50
	C2820,C2832,C2843,C2859,C2863		CEAT470M16
	C2881		CEAT470M16
	C2836		CEAT471M16
	C2860,C2869,C2873,C2879		CEAT4R7M50
	C2826,C2837,C2846,C2853		CKSRYB103K50
	C2864,C2865		CKSRYB103K50
	C2802,C2815,C2817,C2834,C2835		CKSRYF104Z16
	C2842,C2858,C2862,C2870,C2875		CKSRYF104Z16
	C2880		CKSRYF104Z16
	C2413		CCSRCH221J50
	C2407		CEAT101M16
	C2405		CEAT471M6R3
	C2412,C2416		CKSRYB102K50
	C2401-C2404,C2406		CKSRYF104Z16
	C2408-C2411,C2414		CKSRYF104Z16
	C3905		CCSRCH121J50
	C3921		CCSRCH221J50
	C3924		CCSRCH820J50
	C3904		CEANP2R2M50
	C3910,C3922		CEAT1R0M50
	C3901,C3913-C3915		CEAT220M50
	C3918		CEAT470M16
	C3902,C3903		CEAT4R7M50
	C3911,C3912		CKSRYB561K50
	C3909		CKSRYB683K16
	C3906,C3908,C3917,C3919,C3923		CKSRYF104Z16
	C3916		CQHA222G50
	C3920		CQHA223G50

RESISTORS

	VR3901	(4.7kΩ)	ACP1091

Mark	No.	Description	Part No.
	R2124		RD1/2MMF271J
	R2127		RD1/4MUF332J
	R2159		RS2MMF2R7J
	R2311,R2318,R2319,R2328 (100Ω)		DCN1092
	R2333,R2334 (100Ω)		DCN1092
	R2303,R3008,R3026,R3041		RS1/16S1001F
	R2726,R3908		RS1/16S1002F
	R2804,R2812		RS1/10S151J
	R2814-R2816,R2820		RS1/10S361J
	R3047,R3056,R3074,R3933		RS1/16S1201F
	R3934		RS1/16S3002F
	R3020,R3031,R3040		RS1/16S3900F
	R3052,R3061,R3073		RS1/16S4700F
	Other Resistors		RS1/16S□□□J

OTHERS

	TV FRONT-END SYSTEM UNIT(SUB)		AXF1103
	TV FRONT-END SYSTEM UNIT(MAIN)		AXF1108
	J2101	3P HOUSING WIRE	ADX2669
	CN2305	52P IC SOCKET	AKH1023
		SHIELD PLATE	ANK1500
	X2301	CERALOCK	ASS1156
	JA2301	JACK/12V	PKN1004
	X2501	CRYSTAL OSCILLATOR	ASS1140
	X2602,X2701	CERAMIC RESONATOR	ASS1019
	X2601,X2702	CERAMIC RESONATOR (3.58MHz)	ASS1138
	CN2805	PIN JACK (9P)	AKB1288
	CN2801	PIN JACK (9P)	AKB1289
	CN2802	5P D-SUB SOCKET	AKP1195
	CN2803	4P MINI DIN SOCKET	AKP7010
	CN2303	FJ CONNECTOR 6P	06PL-FJ
	CN2601	FJ CONNECTOR 6P	06R-FJ
	CN2602	FJ CONNECTOR 12P	12PL-FJ
	CN2304,CN2603,CN2806	SOCKET19-P	19RK-1.25FJN
	CN2804	PLUG 12-P	KM250MA12B
	CN2301	PLUG 8-P	KM250MA8

B FRONT LED ASSY

SEMICONDUCTORS

	Q1151		2SA933S
	Q1152		2SC1740S
	D1151,D1152		1SS133
	D1154		SLR-56MG(LMNP)
	D1153		SLR-56VR(KLMN)
	PC1151	CDS	P1241-09

SWITCHES

	S1151-S1159		ASG7013

CAPACITORS

	C1151,C1153		CEAT101M16
	C1152		CKCYF103Z50

RESISTORS

	VR1151	(47kΩ)	VCP1160
	Other Resistors		RD1/4PU□□□J

Mark	No.	Description	Part No.

OTHERS

	DPO HOLDER		AMR2294
	CN1151	PLUG 5-P	KM250MA5L

C FRONT INPUT ASSY

SEMICONDUCTORS

	Q1171,Q1172		2SC1740S

CAPACITORS

	C1172,C1173		CEJA1R0M50
	C1175		CEJA470M16
	C1171,C1174		CKCYF103Z50

RESISTORS

	All Resistors		RD1/4PU□□□J

OTHERS

	CN1171	PIN JACK(3P)	AKB1254
	CN1172	PLUG 12P	KM250MA12L

D REMOTE SENSOR ASSY

CAPACITORS

	C1192		CCCSL121J50
	C1191		CEAT221M6R3

RESISTORS

	All Resistors		RD1/4PU□□□J

OTHERS

	CN1191	PLUG 3-P	KM250MA3
	X1191	REMOTE SENSOR UNIT	GP1U28X

E SHORT ASSY

OTHERS

	CN1197	PLUG 2-P	AKM1127

F VIDEO IP SERVICE ASSY

SEMICONDUCTORS

	IC1402		24LC08B(I)P
	IC1401		PD5689A9
	IC1403		PST9246N
	IC3201		CXA3106Q
	IC3203		CXD2303AQ
	IC3801		HD64F3067RF20
	IC3209		LT1399CS
	IC3601,IC3604		MS82V16520-8GA
	IC3401		PE5066A
	IC3501		PE5067A
	IC3206		PQ05DZ51
	IC3602		SDA9280
	IC3205		TC74HC126AF
	IC3202		TC74HC4053AF
	IC3208		TC74HC4538AF

Mark	No.	Description	Part No.
	IC3207		TC74HCT04AF
	IC3204		TC74LCX541FT
	IC3802		TC7SET08FU
	IC3003		CM0010AF
	IC3002		KIA431F
	IC3004		LC32V4265JL-25S
	IC3104		MC14053BF
	IC3001		PQ3DZ13
	IC1902		TA1316AN
	IC1901		TC74HC4053AF
	Q1408		2SJ461
	Q1402,Q1407		HN1B04FU
	Q1401,Q1405,Q1406		2SA1162
	Q3205,Q3206,Q3208,Q3209		2SA1162
	Q3601-Q3607		2SA1162
	Q3105,Q3110,Q3115,Q3117,Q3120		2SA1162
	Q1904,Q1908,Q1910,Q1915-Q1918		2SA1162
	Q1924,Q1931,Q1937		2SA1162
	Q1403,Q1404		2SC2712
	Q3201-Q3204,Q3207,Q3213		2SC2712
	Q3001-Q3018,Q3020,Q3021		2SC2712
	Q3106-Q3109,Q3111-Q3114,Q3116		2SC2712
	Q3119,Q3121		2SC2712
	Q1909,Q1911,Q1912,Q1919,Q1921		2SC2712
	Q1927,Q1929,Q1930,Q1934,Q1935		2SC2712
	Q1939,Q1940		2SC2712
	Q1905,Q1920,Q1925		2SC3598
	Q3118		HN1B04FU
	Q1907,Q1926		HN1A01FU
	Q1906,Q1913,Q1936,Q1941		HN1B04FU
	Q1901-Q1903,Q1932,Q1933		HN1C01FU
	D1401,D1406		1SS226
	D1908,D1911,D1913,D1914,D1919		1SS226
	D1924-D1926		1SS226
	D1402,D1403		1SS352
	D3201,D3809,D3810		1SS352
	D1904,D1905,D1907,D1921		1SS352
	D1928,D1929		1SS352
	D1404,D1405		UDZS6.8B
	D1902,D1906,D1909,D1912,D1915		1SS184
	D1923		1SS184
	D1916		HZU3CLL

COILS AND FILTERS

Mark	No.	Description	Part No.
	L1403,L1404		QTL1013
	F3202,F3203,F3401,F3801		ATF1194
	L3401		ATH1107
	L3204		ATH1108
	L3601-L3603		LCTA100J2520
	L3609-L3613		LCTA120J2520
	L3607,L3608,L3614		LCTA1R5J2520
	L3201-L3203,L3604-L3606		QTL1013
	L3801-L3804		QTL1013
	F3001-F3004		ATF1194
	L3109		LCTA120J2520
	L3003,L3005		LCTA220J2520
	L3103,L3105,L3107		LCTA4R7J2520
	L3102,L3104,L3106		LCTA5R6J2520
	L3004,L3006		QTL1013
	L1906		LFEA470J

CAPACITORS

Mark	No.	Description	Part No.
	C1401,C1405		CCSRCH221J50
	C1414,C1415		CCSRCH5R0C50
	C1412		CEAT102M6R3
	C1402,C1403		CFTLA105J50
	C1407,C1417		CKSRYB102K50
	C1416		CKSRYB103K50
	C1404		CKSRYB104K16
	C1411		CKSRYB561K50
	C1408-C1410,C1413,C1418-C1420		CKSRYF104Z16
	C3205,C3207 (47µ/16V)		ACE1130
	C3260 (330p/50V)		ACE1158
	C3204,C3254,C3257,C3258		CCSRCH101J50
	C3252		CCSRCH102J50
	C3647,C3649,C3651		CCSRCH120J50
	C3624,C3653-C3655		CCSRCH121J50
	C3241,C3244,C3245,C3277-C3279		CCSRCH151J50
	C3656		CCSRCH180J50
	C3236,C3237,C3253,C3416,C3520		CCSRCH220J50
	C3817		CCSRCH220J50
	C3648,C3650,C3652		CCSRCH270J50
	C3814,C3815		CCSRCH7R0D50
	C3518		CEAT102M6R3
	C3224,C3233,C3247,C3269-C3271		CEAT221M6R3
	C3402,C3601,C3617,C3801		CEAT221M6R3
	C3267		CEAT222M6R3
	C3220		CEAT470M16
	C3273,C3274		CEV470M10
	C3646		CKSRYB152K50
	C3202		CKSRYB222K50
	C3210-C3215		CKSRYF103Z50
	C3201,C3216-C3218,C3221-C3223		CKSRYF104Z16
	C3225-C3232,C3234,C3238,C3240		CKSRYF104Z16
	C3243,C3246,C3249-C3251,C3255		CKSRYF104Z16
	C3259,C3262,C3272,C3276		CKSRYF104Z16
	C3403-C3415,C3502-C3505		CKSRYF104Z16
	C3507-C3517,C3603-C3614,C3616		CKSRYF104Z16
	C3618-C3622,C3625-C3636		CKSRYF104Z16
	C3638-C3641,C3643-C3645		CKSRYF104Z16
	C3803-C3805,C3816,C3817,C3818		CKSRYF104Z16
	C3206,C3261		CKSRYF223Z50
	C3268,C3401		CKSRYF473Z50
	C3006,C3026,C3038,C3049,C3060		CCSRCH101J50
	C3079		CCSRCH101J50
	C3065		CCSRCH102J50
	C3032,C3037,C3071,C3078,C3118		CCSRCH330J50
	C3124,C3125,C3127,C3132		CCSRCH330J50
	C3119,C3128,C3133		CCSRCH331J50
	C3120,C3129,C3134		CCSRCH470J50
	C3015,C3020,C3027,C3033,C3039		CEAT100M50
	C3050,C3055,C3061		CEAT100M50
	C3072		CEAT101M16
	C3108,C3136		CEAT221M10
	C3003,C3063,C3070		CEAT221M6R3
	C3111,C3122,C3126,C3130		CEAT470M16
	C3105		CEAT471M16
	C3016,C3022,C3029,C3030		CKSQYF105Z16
	C3035,C3036,C3041,C3042,C3045		CKSQYF105Z16
	C3052,C3053,C3057,C3058,C3064		CKSQYF105Z16
	C3002,C3004,C3007,C3009,C3010		CKSRYB103K50
	C3012-C3014,C3018,C3021,C3025		CKSRYB103K50

Mark	No.	Description	Part No.
	C3028,C3031,C3034,C3040		CKSRYB103K50
	C3043,C3044,C3048,C3051,C3054		CKSRYB103K50
	C3056,C3059,C3062,C3066		CKSRYB103K50
	C3068,C3069,C3073-C3077		CKSRYB103K50
	C3109,C3110,C3116		CKSRYB103K50
	C3017,C3023,C3024,C3046,C3047		CKSRYB104K16
	C3080,C3082		CKSRYB152K50
	C3084,C3087		CKSRYB224K10
	C3121,C3123,C3137		CKSRYF104Z16
	C3086		CKSRYF473Z50
	C1905		CCSRCH330J50
	C1903		CCSRCH331J50
	C1947		CCSRCH391J50
	C1940		CCSRCH561J50
	C1953,C1962		CCSRCH7R0D50
	C1904,C1910		CEAT100M50
	C1924		CEAT101M16
	C1981		CEAT102M10
	C1980		CEAT102M6R3
	C1928,C1929,C1938		CEAT1R0M50
	C1942		CEAT221M10
	C1954,C1956,C1958		CEAT222M10
	C1937,C1969		CEAT2R2M50
	C1975,C1977,C1979		CEAT471M16
	C1939,C1948		CEAT4R7M50
	C1913-C1915,C1933,C1945,C1946		CKSRYB103K50
	C1966		CKSRYB103K50
	C1917-C1922,C1930-C1932		CKSRYB104K16
	C1934-C1936		CKSRYB104K16
	C1901,C1902,C1906-C1908,C1911		CKSRYF104Z16
	C1923,C1925,C1926,C1941		CKSRYF104Z16
	C1949,C1950,C1955,C1957		CKSRYF104Z16
	C1959-C1961,C1963,C1964,C1968		CKSRYF104Z16
	C1974,C1976,C1978,C1982		CKSRYF473Z50

RESISTORS

	R1415,R1417,R1424 (100Ω)		DCN1092
	R1437,R1453,R1462,R3070 (100Ω)		DCN1092
	R3521,R3522,R3801,R3808		DCN1090
	R3821,R3826,R3831		DCN1090
	R3809,R3810		DCN1100
	R3289		RN1/16SE3902D
	R3635,R3637		RS1/16S1000F
	R3291		RS1/16S1001F
	R3607		RS1/16S1002F
	R3311		RS1/16S1301F
	R3633		RS1/16S1302F
	R3606		RS1/16S1500F
	R3312,R3313		RS1/16S1501F
	R3207,R3290		RS1/16S1601F
	R3281,R3305-R3310		RS1/16S2201F
	R3206,R3286		RS1/16S3301F
	R3659		RS1/16S47R0F
	R3638		RS1/16S56R0F
	R3644		RS1/16S6801F
	R3012-R3015 (22kΩ)		ACN7073
	R3024,R3147,R3152		RS1/16S1002F
	R3010		RS1/16S1502F
	R3122		RS1/16S2002F
	R3135,R3136,R3148,R3156		RS1/16S2200F
	R3164,R3165		RS1/16S2200F
	R3127		RS1/16S2202F
	R3131,R3145		RS1/16S3900F
	R3170		RS1/16S4700F
	R3167		RS1/16S5600F
	R3125,R3146		RS1/16S9100F
	R1946		RD1/2MMF221J
	R1959		RD1/4MUF121J
	R2061		RD1/4MUF680J
	R2059		RD1/4MUF820J
	R2033		RS1/16S1001F
	R2034		RS1/16S1002F
	R1921		RS1/16S1200F
	R1976,R2087		RS1/16S1300F
	R2046		RS1/16S1502F
	R1928,R2027		RS1/16S1801F
	R1947		RS1/16S1802F
	R2030		RS1/16S2002F
	R1939		RS1/16S2200F
	R2025,R2053		RS1/16S2201F
	R2023		RS1/16S2202F
	R2021		RS1/16S2400F
	R1936,R2003,R2088		RS1/16S2700F
	R2007		RS1/16S2701F
	R1975		RS1/16S3300F
	R2018		RS1/16S39R0F
	R2026		RS1/16S4301F
	R1913		RS1/16S4701F
	R1948		RS1/16S5101F
	R2020		RS1/16S56R0F
	R1911		RS1/16S6800F
	R2041		RS1/16S6801F
	R1924,R2054		RS1/16S7500F
	R2052		RS1/16S7501F
	R2032,R2051		RS1/16S8201F
	Other Resistors		RS1/16S□□□J

OTHERS

	SHIELD PLATE		ANK1500
	X1401	CERALOCK	ASS1156
	X1402	CERAMIC RESONATOR (26MHz)	ASS1157
	X3801	CERAMIC RESONATOR (20MHz)	ASS1147
	CN3802	PLUG 7-P	KM250MA7
	CN3103	PLUG 4-P	KM250MA4
	X1901	CERAMIC RESONATOR	ASS1019
	CN3102	FJ CONNECTOR 6P	06PL-FJ
	CN1903	FJ CONNECTOR 12P	12PL-FJ
	CN1401-CN1403,CN1902,CN3101	PLUG 19-P	19P-250K-1.25FJNA
	CN1404	PLUG 11-P	KM250MA11
	CN1901	PLUG 12-P	KM250MA12

G R CRT DRIVE ASSY

SEMICONDUCTORS

	Q1002		2SA1480YA
	Q1001		2SC3790
	Q1003		2SC3942RL
	D1004		1SS133
	D1006		MTZJ5.1B
	D1002,D1003,D1005		S5688G
	D1001		ERB06-15

Mark	No.	Description	Part No.
COILS			
	L1004		LAU100J
	L1002		LAU3R9J
	L1001		LAU470J
	L1003		LAU6R8J
CAPACITORS			
	C1008	(1000p/2kV)	ACG1001
	C1002	(22µ/250V)	ACH1318
	C1006		CEAT1R0M50
	C1011		CEAT470M16
	C1001,C1003		CKCYE103P2H
	C1007,C1012		CKCYF103Z50
RESISTORS			
	R1015	(47Ω, 1/2W)	ACN1129
	R1009	(2.2kΩ)	ACN1155
	R1011		RD1/2PM102J
	R1005		RD1/2PM273J
	R1013		RD1/2LMF101J
	R1007		RS1MMF221J
	R1001,R1003		RS3LMF392J
	R1002,R1004		RS3LMF472J
	Other Resistors		RD1/4PU□□□J
OTHERS			
	SG1001,SG1002	SPARK GAP	AEX1024
	CN1005	CRT SOCKET	AKG1006
	CN1002	PLUG 3-P	KM250MA3
	CN1001	PLUG 3-P	KM250MA3R
	CN1003	PLUG 4-P	KM250MA4R
	CN1006	PLUG 7-P	KM250MA7
		SCREW	BPZ30P100FZK
		SCREW	PMZ30P100FZK
	CN1004	1P TERMINAL	AKF1029
	J1001	CRT GND WIRE	ADX2190
		CRT HOLDER	AMR2190

H G CRT DRIVE ASSY

Mark	No.	Description	Part No.
SEMICONDUCTORS			
	Q1052		2SA1480YA
	Q1051		2SC3790
	Q1053		2SC3942RL
	D1054		1SS133
	D1056		MTZJ5.1B
	D1052,D1053,D1055		S5688G
	D1051		ERB06-15
COILS			
	L1054		LAU100J
	L1051		LAU470J
	L1052		LAU4R7J
	L1053		LAU6R8J
CAPACITORS			
	C1058	(1000p/2kV)	ACG1001
	C1053	(22µ/250V)	ACH1318
	C1054		CEAT1R0M50
	C1062		CEAT470M16
	C1051,C1052		CKCYE103P2H
	C1055-C1057,C1063		CKCYF103Z50
RESISTORS			
	R1064	(47Ω, 1/2W)	ACN1129
	R1058	(2.2kΩ)	ACN1155
	R1060		RD1/2PM102J
	R1056		RD1/2PM273J
	R1063		RD1/2LMF101J
	R1055		RS1MMF221J
	R1051,R1052		RS3LMF392J
	R1053,R1054		RS3LMF472J
	Other Resistors		RD1/4PU□□□J
OTHERS			
	SG1051,SG1052	SPARK GAP	AEX1024
	J1052	5P HOUSING WIRE	ADX2668
	CN1051	CRT SOCKET	AKG1006
		SCREW	BPZ30P100FZK
	CN1055	PLUG 3-P	KM250MA3
	CN1056	PLUG 3-P	KM250MA3B
	CN1054	PLUG 4-P	KM250MA4
		SCREW	PMZ30P100FZK
	CN1053	1P TERMINAL	AKF1029
	J1051	CRT GND WIRE	ADX2190
		CRT HOLDER	AMR3241

I B CRT DRIVE ASSY

Mark	No.	Description	Part No.
SEMICONDUCTORS			
	Q1102		2SA1480YA
	Q1101		2SC3790
	Q1103		2SC3942RL
	D1104		1SS133
	D1106		MTZJ5.1B
	D1102,D1103,D1105		S5688G
	D1101		ERB06-15
COILS			
	L1104		LAU100J
	L1102		LAU220J
	L1101		LAU470J
	L1103		LAU6R8J
CAPACITORS			
	C1108	(1000p/2kV)	ACG1001
	C1103	(22µ/250V)	ACH1318
	C1104		CEAT1R0M50
	C1112		CEAT470M16
	C1101,C1102		CKCYE103P2H
	C1105,C1113		CKCYF103Z50
RESISTORS			
	R1114	(47Ω, 1/2W)	ACN1129
	R1108	(1kΩ, 1/2W)	ACN1130
	R1110		RD1/2PM102J
	R1106		RD1/2PM273J
	R1113		RD1/2LMF101J
	R1105		RS1MMF221J
	R1101,R1102		RS3LMF392J
	R1103,R1104		RS3LMF472J
	Other Resistors		RD1/4PU□□□J

Mark	No.	Description	Part No.
OTHERS			
	SG1101,SG1102	SPARK GAP	AEX1024
	J1101	CRT GND WIRE	ADX2190
	J1102	5P HOUSING WIRE	ADX2668
	CN1101	CRT SOCKET	AKG1006
		SCREW	BPZ30P100FZK
	CN1105	PLUG 3-P	KM250MA3
	CN1106	PLUG 3-P	KM250MA3B
	CN1103	PLUG 4-P	KM250MA4B
		SCREW	PMZ30P100FZK
	CN1104	1P TERMINAL	AKF1029
		CRT HOLDER	AMR3241

J DEFLECTION SERVICE ASSY

Mark	No.	Description	Part No.
SEMICONDUCTORS			
	IC502		NJM4558DXP
	IC501		NJM78M12FA
	IC403		NJM79M05FA
	IC401,IC402		STK392-110
	IC805		CA0007AD
	IC802		LA78045
	IC803		M5220P
	IC801		PA0053B
	Q501,Q502		2SA1145
	Q503,Q505,Q507,Q513		2SA933S
	Q602,Q604		2SA933S
	Q401,Q403,Q703		2SA933S
×	Q609,Q610		2SA933S
	Q504,Q506,Q509,Q514		2SC1740S
	Q601,Q607,Q608		2SC1740S
	Q405,Q613-Q616		2SC1740S
	Q704,Q801		2SC1740S
	Q510		2SC2705
	Q512		2SC3332
⚠	Q511		2SC5716
	Q508		2SD1276A
⚠	Q603		2SK2649-01R
⚠	Q701,Q702		2SC4686A
	Q402,Q404		2SC2878
	D509,D514		10DF2
	D401,D402,		1SS133
	D503,D505-D508,D511-D513		1SS133
	D516-D521		1SS133
	D608,D610,D611,D613,D616		1SS133
	D618,D620,D621		1SS133
	D703-D709		1SS133
	D801,D805,D807,D808		1SS133
	D510		ERB93-02L3
	D515		MTZJ5.1A
	D403-D414,D504		S5688G
	D802-D804,D806,D809		S5688G
⚠	D601,D606		10DF2
	D605		2NU41
⚠	D604		DD52RC
	D607		ERA22-02
	D602,D603		MA723
	D614,D617,D619		MTZJ12
⚠	D701,D702		ERD07-15

Mark	No.	Description	Part No.
COILS AND TRANSFORMERS			
	L401,L402,L501,L502,L602		ATH1107
	L801-L804		ATH1107
	L503,L601,L603		ATH1108
	L805,L806		LAU5R6J
⚠	T502	H.DRIVE TRANS.	ATK1144
⚠	T501	Z DUMMY FBT	ATK1147
⚠	T601	FBT	ATK1148
CAPACITORS			
⚠	C522	(100p/2KV)	ACG-032
	C517	(1μ/160V)	ACH-372
	C511,C530		CCCSL101J50
	C520		CCCSL101K2H
	C513		CCCSL470J50
	C503		CEAT2R2M50
	C507,C515,C526		CEAT101M16
	C506		CEAT101M25
	C529		CEAT101M50
	C518		CEAT221M16
	C502		CEAT330M35
	C509		CEAT4R7M50
	C532,C533		CEAT471M16
	C516		CEHAQ1R0M2C
	C510		CEHAT100M2C
⚠	C523		CFPAB332H3C
⚠	C524		CFPAB472H3C
⚠	C531		CFPMAB564J2G
	C521		CFTLA105J50
	C519		CFTLA683J50
	C512		CKCYB561K50
	C501,C505,C508,C514,C525		CKCYF103Z50
	C527,C528		CKCYF103Z50
	C601		ACG1093
	C610		CCCSL470J50
	C604		CEAT101M16
	C607,C611,C622		CEAT1R0M50
	C612		CEAT221M16
	C616		CEAT470M25
	C624		CEHAT100M50
	C623		CEHAT220M63
	C602		CEHAT470M2C
⚠	C606		CFPAB222H3C
	C603		CKCYE103P2H
	C605,C608,C609,C613,C621		CKCYF103Z50
	C625,C626		CKCYF103Z50
	C701,C702	(4700p/2kV)	ACG1028
	C704		CEAT100M50
	C705		CEAT470M25
	C703		CKCYF103Z50
	C416,C418,C420,C424,C426		CCCSL220J50
	C428		CCCSL220J50
	C433		CEAT101M16
	C431		CEAT101M25
	C403,C409		CEHAT472M25
	C413,C414,C421,C422		CKCYB331K50
	C429,C430		CKCYB331K50
	C415,C417,C419,C423,C425		CKCYB681K50
	C427		CKCYB681K50
	C401,C402,C404-C408		CKCYF103Z50

Mark	No.	Description	Part No.
	C410-C412,C432,C434		CKCYF103Z50
	C808,C809,C844		CCCSL101J50
	C834		CEANP101M25
	C806,C816,C823,C832,C837		CEAT101M10
	C841		CEAT101M25
	C801		CEAT220M50
	C803,C804		CEAT330M16
	C802		CEAT470M10
	C811,C813		CEAT471M10
	C820		CEHAT221M50
	C817,C828		CEHAT471M25
	C807,C810,C821		CFTLA224J50
	C842		CKCYB222K50
	C819,C827		CKCYB331K50
	C812,C814,C815,C818,C822		CKCYF103Z50
	C824-C826,C829,C831,C833		CKCYF103Z50
	C835,C836,C838-C840		CKCYF103Z50

RESISTORS

Mark	No.	Description	Part No.
⚠ ×	VR601		VRTHS6VS103
⚠ ×	VR602		VRTHS6VS473
	R516		RD1/2PM153J
	R530		RD1/2PM223J
	R540		RN1/4PC1503F
	R545		RN1/4PC6801F
	R550		RS1MMF100J
	R502,R506,R531,R543,R544		RS2MMF1R0J
	R542		RS2MMF222J
	R529		RS2MMF390J
	R614 (27Ω, 1/2W)		ACN1136
⚠	R603,R607		RN1/2PC4302F
⚠ ×	R624		RN1/4PC1002F
⚠ ×	R628		RN1/4PC1502F
⚠ ×	R612		RN1/4PC1801F
⚠ ×	R633		RN1/4PC3302F
⚠ ×	R627		RN1/4PC3601F
⚠ ×	R622		RN1/4PC6802F
	R601,R602		RS2MMF101J
	R608,R609		RS2MMFR47J
	R626		RD1/4PU102J
	R701		ACN1011
	R717-R719,R726-R728		RD1/2PM114J
	R714-R716,R723-R725		RD1/2PM184J
	R702-R713		RD1/2PM224J
	R732		RN1/4PC1602F
	R721		RN1/4PC2202F
	R733		RN1/4PC2000F
	R729		RN1/4PC3302F
	R731		RN1/4PC4701F
	R730		RN1/4PC56R0F
	R431,R432,R438,R440,R446		RS2MMF121J
	R448		RS2MMF121J
	R415,R423,R433,R435,R441		RS2MMF1R5J
	R443		RS2MMF1R5J
	R413,R414,R437,R439,R445		RS2MMF221J
	R447		RS2MMF221J
	R449,R450		RS3LMFR47J
	R823,R824,R831		RS1MMF470J
	R829		RS2MMF1R2J
	R830		RS2MMF1R5J
	Other Resistors		RD1/4PU□□□J

OTHERS

Mark	No.	Description	Part No.
	SG701	SPARK GAP	AEX1024
	J601	1P READ WIRE	ADX2492
	J502	1P LEAD WIRE	ADX2654
	J501	4P HOUSING WIRE	ADX2667
⚠	CN503-CN505	PLUG 4-P	AKM1066
	CN601	5P-VH CONNECTOR	B5P-VH
	CN701	PLUG 3-P	AKM1055
	CN405,CN406	SOCKET 15-P	AKP1222
	CN402	4P CONNECTOR	B4B-EH
	CN401	4P CONNECTOR	B4B-EH-R
	CN403	4P CONNECTOR	B4B-EH-K
	CN501,CN502	FJ CONNECTOR 12P	12PL-FJ
	CN404	PLUG 19-P	19P-250K-1.25FJNA
⚠	601	PCS MODULE	MSPAD401
		ISOLATION SHEET	AEB1359
		PLATE SPRING	ANG1569
		SCREW	BBZ30P080FCU
		SCREW	PMB30P100FMC
		SCREW	PMZ30P100FZK
		SCREW	BPZ30P100FZK
		SCREW	PMB30P160FZK

K DIGITAL CONV. ASSY

SEMICONDUCTORS

	IC1203	24LC128(I)P
	IC1205	CD0031AM-TFB
	IC1204	CM0022AF
	IC1201	M51952BML
	IC1209	NJM4558MD
	IC1202,IC1206-IC1208	UPC4570G2-TFB
	IC1210,IC1211	UPC4570G2-TFB
	Q1204-Q1206	2SA1162
	Q1202,Q1203	2SC2712
	Q1201	2SJ461
	D1202-D1205	1SS226

COILS

	F1201-F1203	ATF1194
	L1205,L1207-L1209,L1212,L1213	LFEA471J
	L1201-L1203,L1206,L1210,L1211	QTL1013

CAPACITORS

	C1213,C1219,C1226,C1236,C1241	CCSRCH100D50
	C1249,C1255,C1259,C1269	CCSRCH100D50
	C1274,C1275,C1280	CCSRCH100D50
	C1214,C1227,C1243,C1256,C1270	CCSRCH471J50
	C1276	CCSRCH471J50
	C1265	CEANP4R7M50
	C1203-C1205,C1211,C1217,C1221	CEAT101M16
	C1250,C1251	CEAT101M16
	C1262	CEAT2R2M50
	C1207-C1209,C1222,C1225,C1231	CEAT470M10
	C1234,C1237,C1240	CEAT470M10
	C1288	CKSRYB102K50
	C1289	CKSRYB221K50
	C1202	CKSRYB222K50
	C1229	CKSRYB472K50

Mark	No.	Description	Part No.
	C1260		CKSRYB821K50
	C1201,C1206,C1210,C1212,C1216		CKSRYF103Z50
	C1218,C1220,C1223,C1224,C1230		CKSRYF103Z50
	C1232,C1233,C1235,C1238,C1239		CKSRYF103Z50
	C1242,C1245-C1248,C1253,C1254		CKSRYF103Z50
	C1258,C1261,C1264,C1267,C1268		CKSRYF103Z50
	C1272,C1273,C1278,C1279		CKSRYF103Z50
	C1281-C1284,C1287		CKSRYF103Z50
	C1215,C1228,C1244,C1257,C1271		CQMA472J50
	C1277		CQMA472J50
	C1252		CQMA823J50

RESISTORS

	R1209,R1222,R1236,R1247,R1259		RS1/16S1002F
	R1272,R1282,R1283,R1297,R1303		RS1/16S1002F
	R1310,R1314		RS1/16S1002F
	R1211,R1223,R1237,R1248,R1273		RS1/16S4302F
	R1279		RS1/16S4302F
	R1284,R1290,R1298,R1304,R1311		RS1/16S5602F
	R1315		RS1/16S5602F
	Other Resistors		RS1/16S□□□J

OTHERS

	CN1201,CN1202	PLUG 15-P	AKM1206

L POWER SW ASSY

SWITCH

	S1196		ASG1087

OTHERS

	CN1196	PLUG 2-P	AKM1127

M POWER SUPPLY ASSY

SEMICONDUCTORS

⚠	IC101		MIP0253SP
	IC102,IC103		ON3171-S
⚠	IC201		AN8029
	IC202		ON3171-S
	IC304,IC305		NJM7809FA
	IC302		PQ30RV11
	IC301		PQ30RV31
	IC902		BD3867AS
	IC901		LA4282
	IC1601,IC1602		NJM4558DXP
	Q101,Q108		2SA933S
	Q301,Q302,Q304,Q904		2SA933S
	Q102-Q107,Q109,Q303		2SC1740S
	Q901-Q903,Q905		2SC1740S
	Q1601-Q1606		2SC1740S
⚠	Q201		2SK1938-R
	Q306		2SC2705
	Q308		2SC3468
	Q305,Q307		2SD1276A
	Q758		2SA1535
	Q751,Q757,Q760,Q762		2SA720A
	Q752,Q754-Q756,Q761,Q763		2SC1318A
	Q759		2SC3944
	D104-D106,D108-D110		1SS133
	D301,D303-D306,D308		1SS133
	D310,D311,D313,D317,D318		1SS133
	D322,D324,D901-D906		1SS133
	D107,D111		BR3371XJ30A
	D103		D1NS4
	D101		ERB06-15
	D102		S1WB(A)60B
	D206		10DF2
	D201		D5SBA60(B)
	D202,D205		MA723
	D209		MTZJ24
	D326,D327		10DF2
	D328		ERB06-15
	D321		ERD29-06J
	D312		MTZJ5.1C
	D315		MTZJ6.2A
	D325		MTZJ6.2B
	D329		MTZJ7.5B
	D307		YG802C04R
	D309		YG802C09
	D314,D316		YG911S2R
	D751,D752,D754,D755		S5688G

RELAYS

	RY201,RY202		ASR1052

TRANSFORMERS, COILS AND FILTERS

⚠	T101	CONVERTER TRANS	ATK1133
⚠	T201	CONVERTER TRANS	ATK1146
	L101		ATX1008
⚠	L201,L202		ATF1183
	L203,L204		ATX1021
	L308-L311,L317,L318		ATH1107
	L324-L326		ATH1108
	L313		ATH1109
	L312,L314-L316,L319-L323		ATX1008
	L301,L303-L307		ATX1021
	L751-L754		ATH1109
	L755,L756		ATX1021

CAPACITORS

	C101	(0.1μ/275V)	ACE1156
	C102	(0.01μ/275V)	ACE1157
	C106,C110		CEAT100M50
	C108,C109,C111		CEAT470M25
	C105		CEHAT331M10
	C103		CEHAT470M2D
	C104		CFTLA104J50
⚠	C205,C207	(0.22μ/275V)	ACE1155
	C217,C218	(0.01μ/AC250V)	ACG-501
	C206,C208,C219	(3300p/2kV)	ACG1008
	C203,C204	(4700p/AC250V)	ACG1064
	C201,C202	(820μ/200V)	ACH1148
	C212		CCCCH271J50
	C215		CEAT101M25
	C216		CEAT1R0M50
	C211		CEAT220M50
	C210		CKCYF103Z50
	C213		CQMA182J50
	C209		CQMA473J50
	C214		CQMA822J50
	C324,C347	(100p/2kV)	ACG-032
	C307,C308	(4700p/AC250V)	ACG1064
	C332		ACH1146
	C339,C341		CCCSL101K2H
	C309,C315,C320,C322		CCCSL221K2H

Mark	No.	Description	Part No.
	C301-C303,C318,C342		CEAT100M50
	C314,C328,C331		CEAT101M16
	C325,C348		CEAT101M25
	C334,C335		CEAT102M25
	C337		CEAT1R0M50
	C350		CEAT222M10
	C306,C349		CEAT222M6R3
	C340		CEHAT100M2A
	C310,C311		CEHAT103M10
	C346		CEHAT220M2E
	C323		CEHAT332M50
	C344		CEHAT470M2E
	C316,C317,C321		CEHAT472M25
	C333		CKCYE103P2H
	C304,C305,C312,C313,C319		CKCYF103Z50
	C326,C327,C329,C330,C345		CKCYF103Z50
	C338		CQMA104J50
	C753		CCCSL101J50
	C756,C771		CEAT101M25
	C751		CEAT470M50
	C760,C764		CEHAT220M2C
	C767		CEHAT3R3M2C
	C759,C765,C766		CKCYE103P2H
	C754,C769		CKCYF103Z50
	C752,C757,C772		CKCYF473Z50
	C768		CQMA472J50
	C758		CQMA472K2E
	C911		CEAT100M50
	C921		CEAT102M35
	C914,C932		CEAT1R0M50
	C936		CEAT221M10
	C906,C908		CEAT2R2M50
	C905,C909		CEAT330M50
	C933		CEAT470M16
	C902		CEAT471M16
	C901,C916-C919,C928,C929		CEAT4R7M50
	C923,C927		CEHAT102M35
	C907		CEHAT221M25
	C926,C935		CFTLA104J50
	C913,C931		CKCYB102K50
	C920,C925		CKCYB182K50
	C910,C924		CKCYB331K50
	C903,C922,C937		CKCYF103Z50
	C915		CQMA104J50
	C912,C930		CQMA683J50
	C1611		CEAT100M50
	C1607,C1608		CFTLA274J50
	C1605,C1606		CFTLA393J50
	C1601,C1602		CFTLA473J50
	C1603,C1604		CFTLA684J50
	C1609,C1610		CKCYF103Z50

RESISTORS

	VR101,VR301 (1kΩ)		VCP1151
	R102 (2.7Ω)		ACN1150
	R101		RD1/4MUF103J
	R107		RN1/4PC3301F
	R104		RN1/4PC3901F
	R126		RT5PZ1R8K
	R201,R204 (2.2MΩ, 1/2W)		RCN1080
	R211		RD1/2MMF100J
	R210		RD1/4MUF681J
	R207		RS1MMF151J
	R203,R206		RS1MMF333J
	R202		RS1MMF473J
	R214-R216		RS2MMFR22J
	R331		RD1/2PM154J
	R310,R313		RN1/4PC1101F
	R309		RN1/4PC1801F
	R312		RN1/4PC3301F
	R340		RS1MMF100J
	R341		RS2MMF1R2J
	R324		RS2MMF223J
	R338,R339		RS2MMF2R2J
	R322		RS2MMF472J
	R334,R335		RS2MMF6R8J
	R336,R337		RS2MMFR22J
	R766		RD1/2MMF100J
	R767		RD1/2MMF152J
	R757,R758		RD1/2MMF270J
	R751		RD1/2PM272J
	R769,R776		RD1/2PM2R2J
	R768,R781		RD1/4MUF560J
	R752,R764		RS1MMF472J
	R770,R775		RS2MMF271J
	R774		RS3LMF391J
	R915,R924		RD1/2PM152J
	R902		RD1/2PM561J
	R914,R923		RD1/4MUF2R2J
	Other Resistors		RD1/4PU□□□J

OTHERS

⚠	FU201,FU301	FUSE (10A/ 250V)	AEK1069
⚠	FU302	FUSE (5A/ 125V)	REK1083
⚠	FU303,FU304	FUSE (4A/ 125V)	REK1082
	H201,H202	FUSE HOLDER	AKR1007
	H303-H308	FUSE CLIP	AKR1003
	H301,H302	FUSE HOLDER	AKR1007
	CN101	PLUG 2-P	AKM1127
	CN201	PLUG2-P	AKM1156
	CN306	PLUG 7-P	KM250MA7
	CN751	PLUG 9-P	KM250MA9
	CN901	PLUG 4-P	KM250MA4B
	CN302	FJ CONNECTOR 6P	06R-FJ
	CN301,CN303,CN304,CN905	FJ CONNECTOR 12P	12R-FJ
	CN902-CN904	SOCKET19-P	19RK-1.25FJN
	CN305	PLUG 4-P	KM250MA4
	J301	4P HOUSING WIRE	ADX2667
		ISOLATION SHEET	AEB1359
		PLATE SPRING	ANG1569
		SCREW	PMB30P100FMC
		SCREW	PMZ30P100FZK
		SCREW	BBZ30P080FCU

6. ADJUSTMENT

6.1 INTRODUCTION

• IMPORTANT

When replacement of the following assemblies are required during repairs, be sure to replace the EEPROMs with the mounted ones in order to retain the adjustment data of the unit and to facilitate adjustment after the replacement of the assemblies.

Name of Assy	EEPROM	Main Contents of Memory
SIGNAL Assy	IC2301 [24LC32(I)P]	Adjustment data, such as W/B and color data, in FACTORY mode User data set on the MENU
DIGITAL CONV. Assy	IC1203 [24LC128P]	Convergence adjustment data
VIDEO IP SERVICE Assy	IC1402 [24LC08B(I)P]	Convergence offset data

Notes:

- Even if the EEPROMs are replaced, adjustment may be necessary, depending on the part or assembly to be replaced.
  For details, see page 120.
- Even if the EEPROMs are replaced, if the EEPROMs are damaged or if their data have been changed from the adjustment data, the status before the failure will not be restored. Check the status of the unit after replacement of the EEPROMs, and readjust if necessary.

6.2 JIGS AND MEASURING INSTRUMENTS

 Remote control unit AXD1457	 ⊖ Screwdriver	 ⊖ Adjustment screwdriver	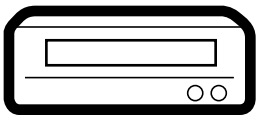 Color bar generator
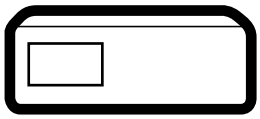 D. DC Voltmeter	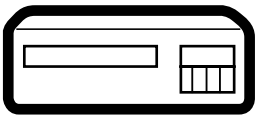 LD Player	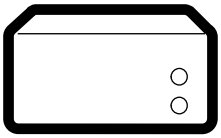 Monoscope	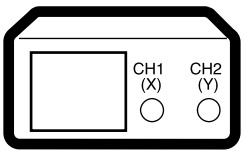 Dual-trace oscilloscope
 Frequency counter	 For HD Signal generator		

6.3 ADJUSTMENT LOCATION AND ITEMS

■ Assembly Adjustment Location

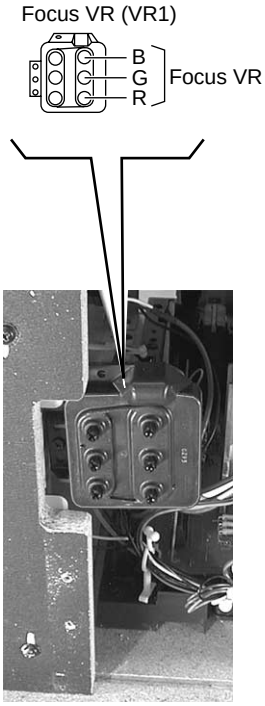

Front View

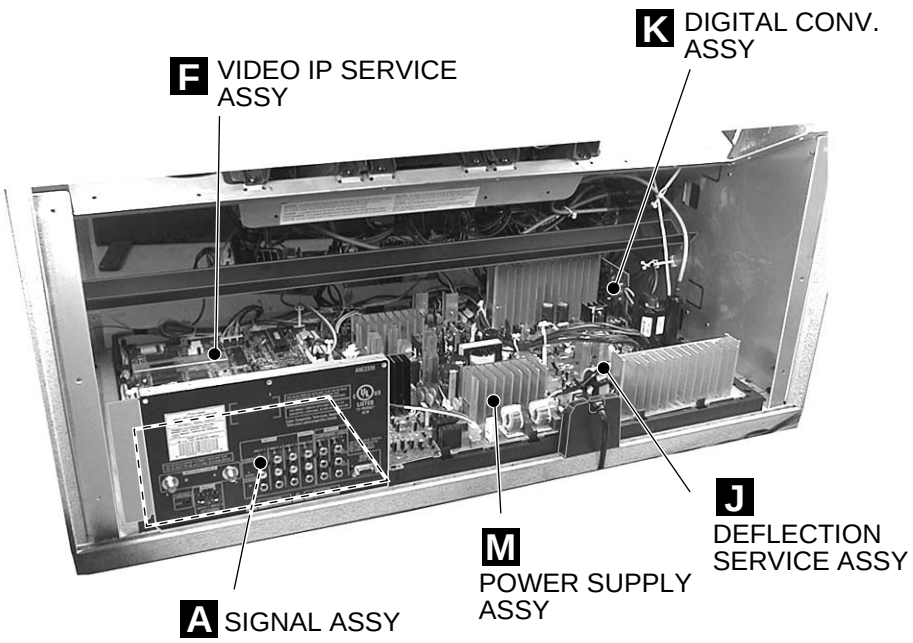

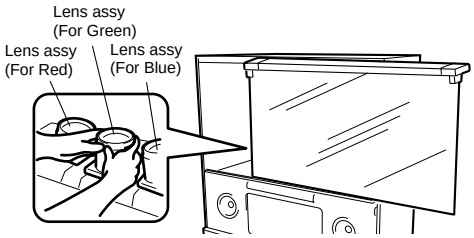

Rear View

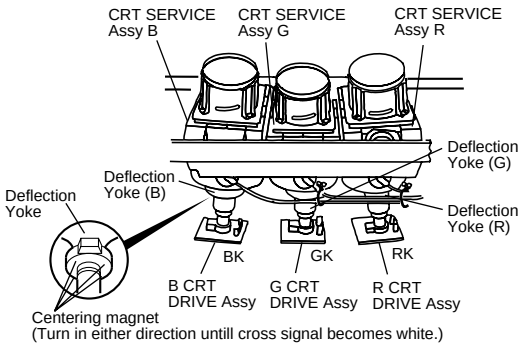

■ Adjustment Items

1. Brightness Adjustment
2. Deflection Yoke Adjustment
3. Focus Adjustment
4. Screen Size Adjustment
5. Convergence Adjustment
6. White Balance Adjustment
7. Panel Adjustment
8. Panel Adjustment for 480P

MEASURING METHOD

Disconnect the FBT anode cable as shown below.
Measure at the point where the cable enters the FBT.

Caution : Take extra precaution when measuring the voltage. High voltage are also present in surrounding circuit boards. (CRT assy, POWER SUPPLY assy)

SERVICEMAN WARNING
Before removing the anode cable, turn off the power, unplug the AC plug and let the unit discharge for more than 1 minut.

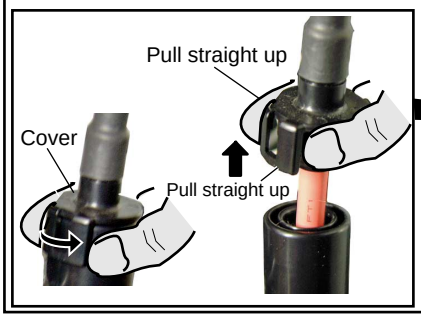

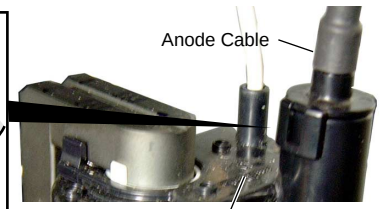

Note :
When reconnecting the cable, proceed in the reverse order. After reconnecting, tug on the cable to check that it is secure.

■ Assembly Adjustment Location Guide

If POWER SUPPLY ASSY	is repaired or replaced	No adjustment is required
If DEFLECTION SERVICE ASSY	is repaired or replaced	❶ Brightness Adjustment (∗2) ❸ Focus Adjustment (VR1: FOCUS VR) (∗2) ❹ Screen Size Adjustment (∗2) ❺ Convergence Adjustment (∗2) ❻ White Balance Adjustment (∗2) ❼ Panel Adjustment (∗1) ❽ Panel Adjustment for 480p (∗1)
If R, G or B CRT DRIVE ASSY	is repaired or replaced	❶ Brightness Adjustment (∗1) ❻ White Balance Adjustment (Composite STD :∗1, Others :∗2) ❼ Panel Adjustment (∗1) ❽ Panel Adjustment for 480P (∗1)
If DIGITAL CONV. ASSY	is repaired or replaced	❸ Focus Adjustment (∗2) ❹ Screen Size Adjustment (∗2) ❺ Convergence Adjustment (∗2)
If VIDEO IP SERVICE ASSY	is repaired or replaced	❶ Brightness Adjustment (∗2) ❻ White Balance Adjustment (Composite STD : ∗1, Others :∗2) ❼ Panel Adjustment (∗1) ❽ Panel Adjustment for 480P (∗1)
If SIGNAL ASSY	is repaired or replaced	❻ White Balance Adjustment (∗2) ❼ Panel Adjustment (∗1) ❽ Panel Adjustment for 480P (∗1)
If CRT ASSY (R, G or B)	is repaired or replaced	❶ Brightness Adjustment (∗1) ❷ Deflection Yoke Adjustment (∗1) ❸ Focus Adjustment (Lens : ∗2, VR1 Focus VR :∗1) ❺ Convergence Adjustment (∗2) ❻ White Balance Adjustment (Composite STD : ∗1, Others :∗2) ❼ Panel Adjustment (∗1) ❽ Panel Adjustment for 480P (∗1)
If LENS ASSY (R, G or B)	is repaired or replaced	❸ Focus Adjustment (Lens : ∗1, VR1 Focus VR :∗2) ❺ Convergence Adjustment (∗2)
If MIRROR and SCREEN	is repaired or replaced	❺ Convergence Adjustment (∗2)
If OTHER ASSY	is repaired or replaced	No adjustment is required

Note :
*1: Readjustment necessary
*2: Turn on the power and confirm the screen. When adjustment deviates, it is readjusted if necessory.

• When the EEPROMs are replaced, check the status of the unit.
• If any IC of the EEPROM is damaged, readjustment of all the items is necessary.

• The necessary adjustment items differ, depending on the assembly or optical part replaced. Check and readjust the adjustment items corresponding to the replaced assembly or part, following adjustment procedures 1 to 8.
Example: When the DIGITAL CONV. Assy is replaced, perform the following:
3. Focus check/adjustment → 4. Screen size check/adjustment → 5. Convergence check/adjustment

6.4 FACTORY ADJ MODE

■ Factory Adjustment Mode

Start ····· Start adjusting

1st FAC ····· Select 1st FACTORY ADJ mode, then adjust.

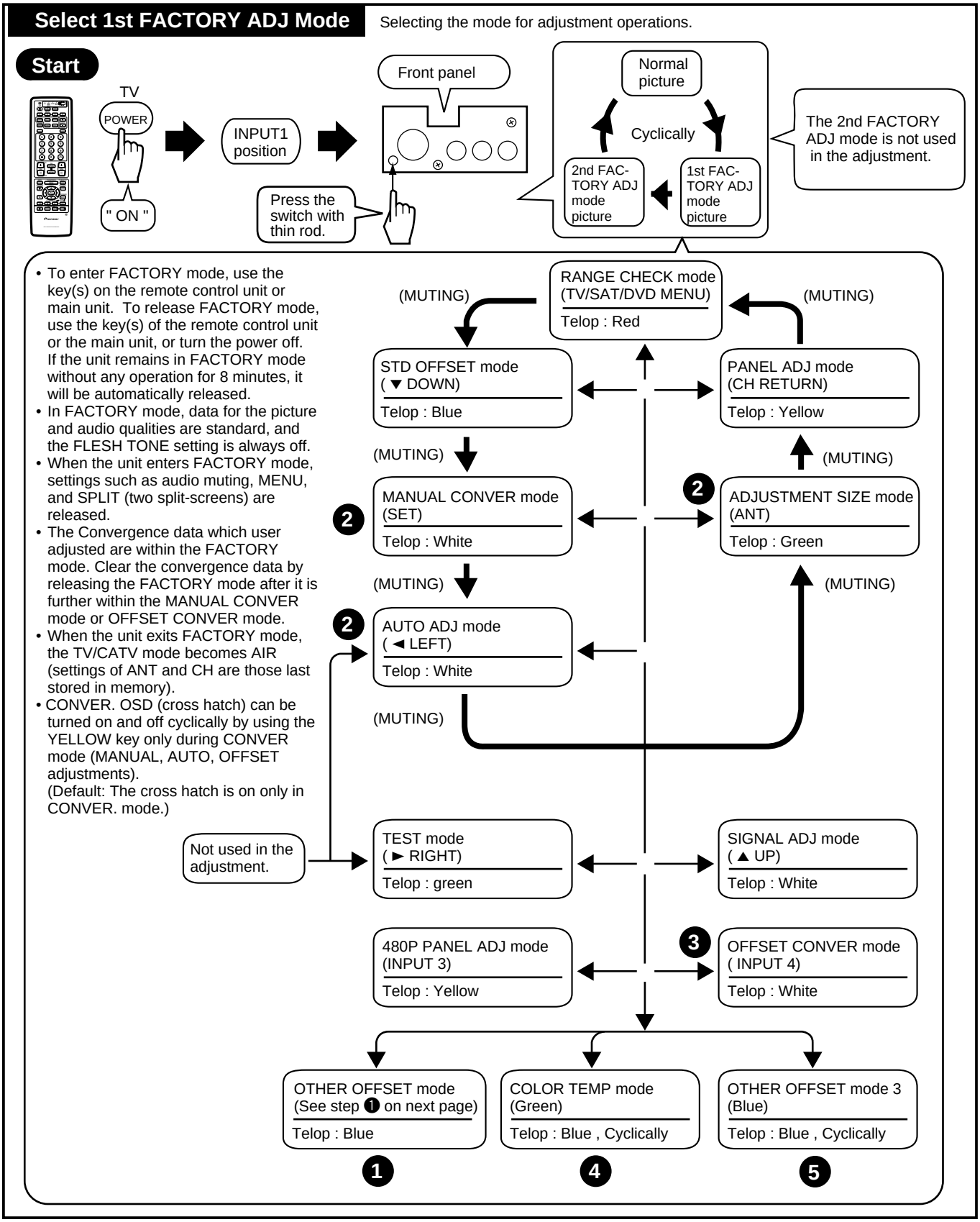

1 OTHER OFFSET mode

To enter the OFFSET mode of each picture quality, use the following keys and codes of the remote control unit:

		Key(s) on the Remote Control Unit
A	STD OFFSET MODE	DOWN
C	COMP (15 kHz) OFFSET MODE	P in P CH-, SUB CH-
D	COMP (31 kHz, 33 kHz) OFFSET MODE	P in P CH+, SUB CH+
B	TV OFFSET MODE	RED
M	COLOR TEMP FILM for THEATER	SLEEP
L	COLOR TEMP FILM for STD & GAME	SWAP
T	RGB OFFSET MODE	CH ENTER

2 The screen size modes change cyclically with each press of the SCREEN key as follows:

→ ① FULL → ② ZOOM → ③ CINEMA → ④ NATURAL → ⑤ FULL (HD) →

Note :The initial mode is always FULL.

3 The OFFSET CONVER. modes change cyclically with each press of the INPUT 4 key as follows:

→ ① OFFSET CONVER. MODE 1 → ② OFFSET CONVER. MODE 2 → ③ OFFSET CONVER. MODE 3 →

Note :The initial mode is always OFFSET CONVER. MODE 1.

4 The offset data of the picture quality in COLOR TEMP mode change cyclically with each press of the GREEN key as follows:

→ ① K LIVE for STD
↓
② γ LIVE for RGB
↓
③ Y FILM for RGB

Note :The initial mode is always LIVE for STD when the GREEN key is pressed.

5 The offset data of picture quality change cyclically with each press of the BLUE key as follows:

→ ① E THEATER OFFSET MODE → ② F GAME OFFSET MODE → ③ V THEATER (RGB) → ④ J GAME (RGB) →

Note :The initial mode is always ① THEATER OFFSET MODE when the BLUE key is pressed.

6.5 ADJUSTMENT

1 Brightness Adjustment

Start 1st FAC Input signal : Black Burst (INPUT 1)

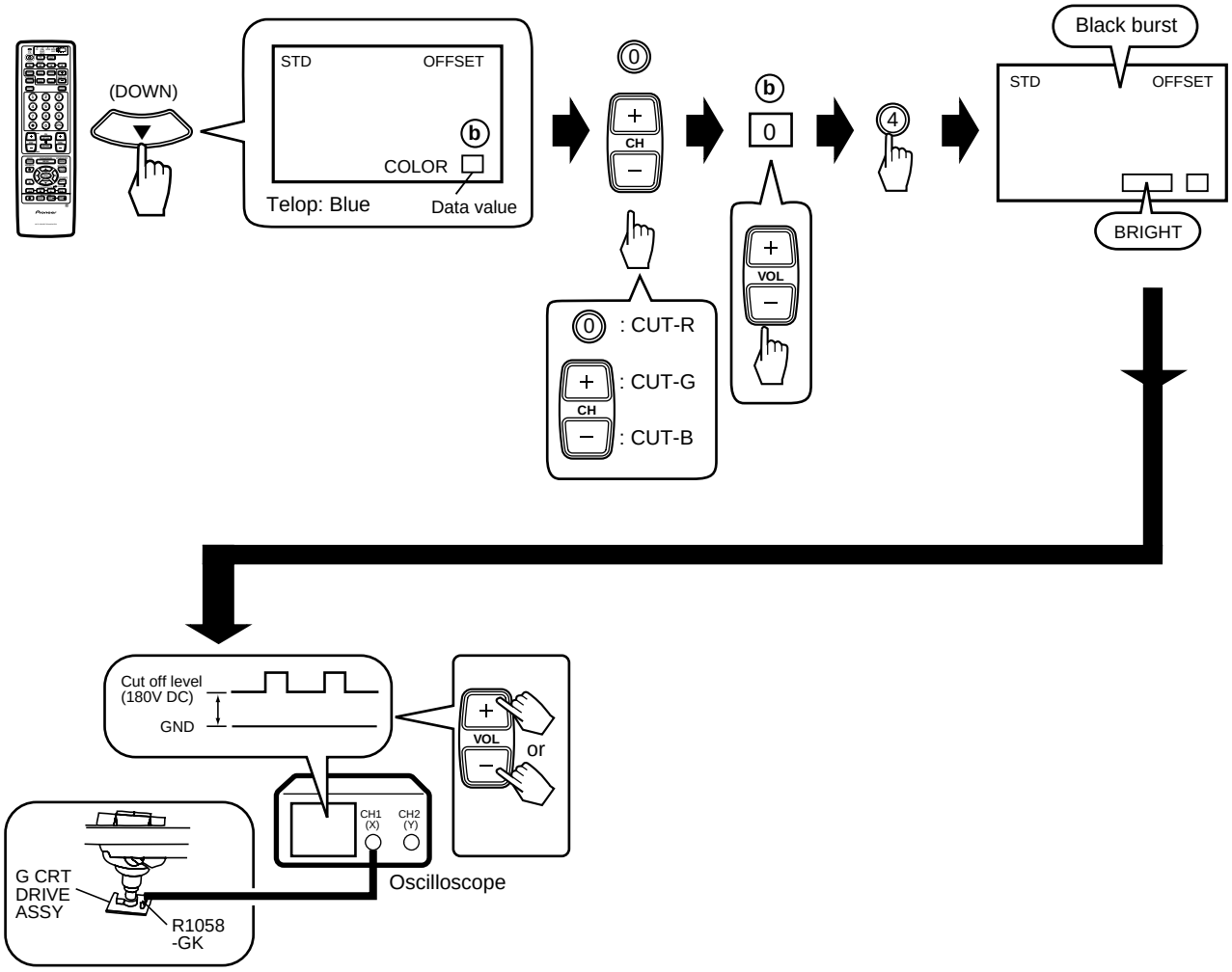

When the DEFLECTION SERVICE Assy or VIDEO IP SERVICE Assy is replaced, check the following to confirm if the above adjustment is necessary:

(1) Make a note of the data of CUT R, CUT G, CUT B, and BRIGHT. (1st FAC) (▼ DOWN)

(2) Input "0" as parameters for (1) and check R1058-GK of the G CRT DRIVE Assy.

If the levels are within 180 V ±5 V, the adjustment is not necessary.

Input the noted data.

If the levels are not within the above level, proceed with the above adjustment.

2 Deflection Yoke Adjustment

2 -1 Deflection Yoke Lean Adjustment

Start

- Input a stable signal (e.g. from the DVD/LD player or SG) to the INPUT 1 connector.
- MENU → SETUP → CONVERGENCE → FULL AND 4:3 NORMAL → ADJ MULTI-POINT Enter the MULTI-POINT (FULL) in the CONVERGENCE.
- The cross hatch disappears if there is no operation with the remote control unit for about 8 minutes. If the cross hatch disappears, repeat the above operation with the remote control unit.

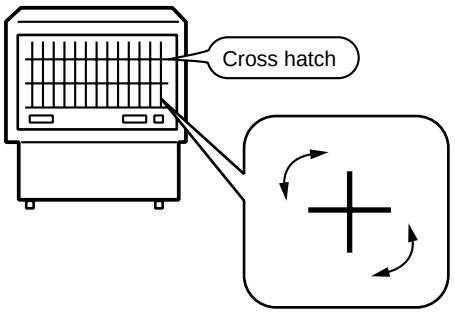

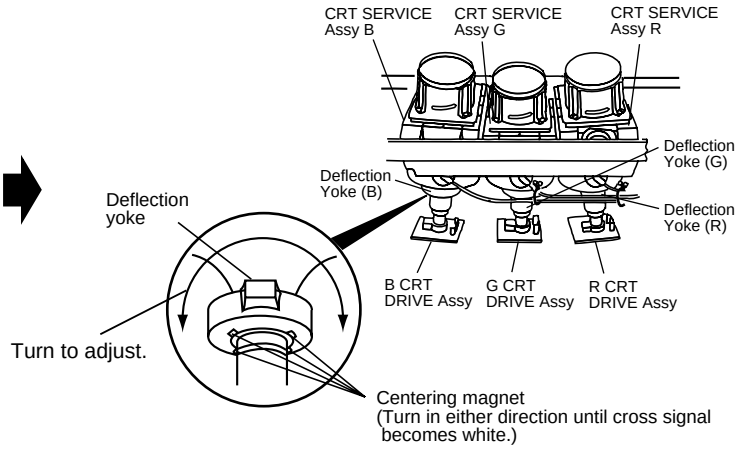

- Turn the deflection yoke of the replaced CRT so that the cross hatch of the color corresponding to the replaced CRT converges with that of the CRTs not replaced.
- When a CRT is replaced, check the position of the VM (Velocity Modulation) yoke.

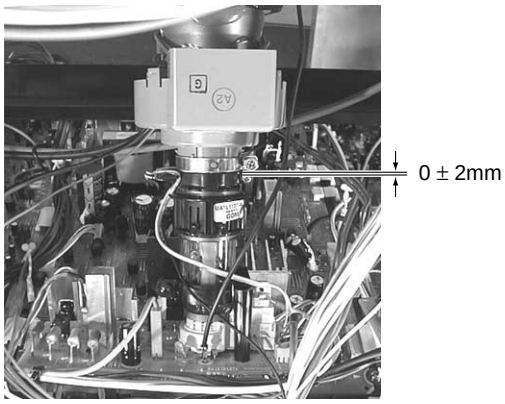

2 -2 Screen Center Adjustment

Start

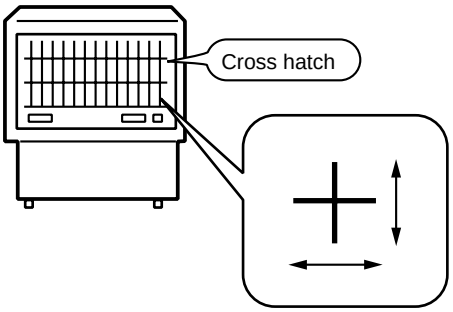

- Move the centering magnet of the deflection yoke for the replaced color so that the horizontal and vertical lines at the center of the screen align with the lines for a color not replaced.
- Secure the centering magnet from moving after adjustment is finished.

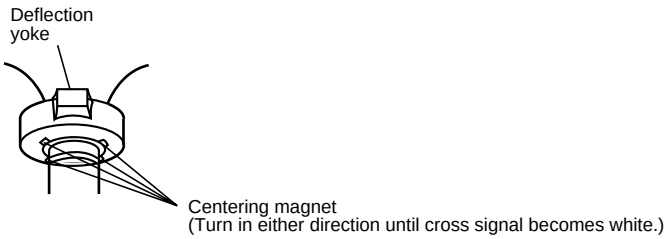

3 Focus Adjustment

3 -1 Focus Adjustment of Lens Assy

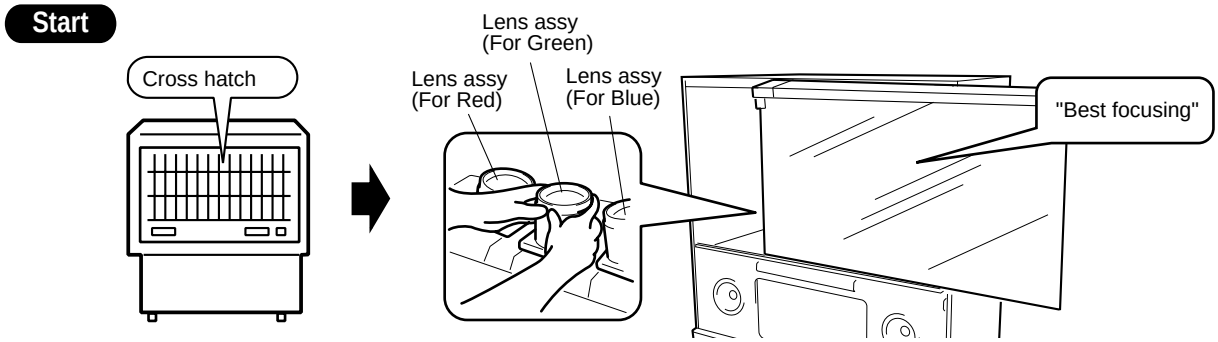

3 -2 Focus VR Adjustment

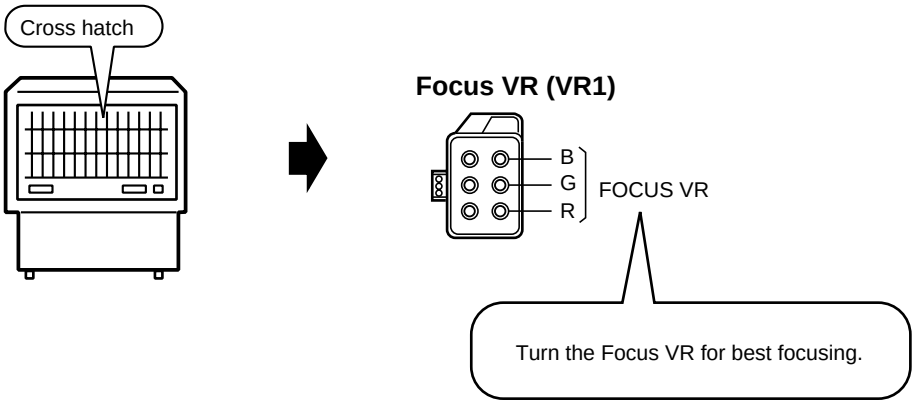

4 Screen Size Adjustment

Check if both vertical and horizontal sizes are within 91% ±2%. If they are not, perform the size adjustment as follows:

4-1 Size Mode

Start 1st FAC

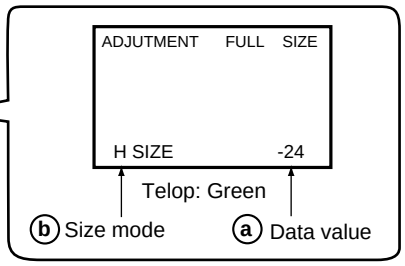

Note :
Screen mode : FULL

a Data value

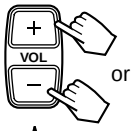

-128 to 126
(even data only)

- Mode for roughly adjusting the horizontal and vertical sizes of the main deflection.
- In this mode, the color is green only, screen size is FULL and the contrast is +10.
- The above settings are cleared when this mode is exited.

b Size mode

1 : H Size (15 kHz)
2 : V Size

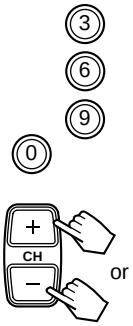

3 : H PHA (15K)
6 : H SIZE (33K) (fixed value D can be varied)
9 : H PHA (31K RGB)
0 : H PHA (33K RGB)
CH + : H PHA (31kHz)
CH – : H PHA (33kHz)

Note :
- The adjustment is unnecessary for D so that is set in factory shipment by the most suitable value. However, please adjust it when a screen is missed when displayed the HD source on the screen.
- For H PHA, refer to the section "• Reference."

Table on H SIZE and V SIZE data

Picture Quality Mode	H SIZE	V SIZE
NATURAL WIDE	A	B
CINEMA WIDE	A	B
ZOOM	A	B
FULL	A	B
FULL for HD	A+D	B

A, B : Adjustment values
D : Fixed values
A+D : Addition of A and D

- Perform the H SIZE and V SIZE adjustments only in FULL mode (NTSC MONOSCOPE signal input).
- Release the FACTORY mode, then change the screen mode and confirm that the picture is not missing.

The factory-preset values are as follows:

Key No.	SD-533HD5 SD-643HD5
1 : H SIZE (15K)	Approx. -32 ± 30
2 : V SIZE	Approx. -24 ± 30
6 : H SIZE (33K)	Approx. 60 ± 30

Note: Varies depending on the factory-preset value.

4-2 Vertical Size Adjustment

Start 1st FAC

Note :
Screen mode : FULL

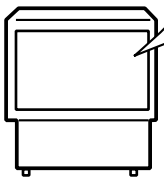

INPUT 1:Monoscope

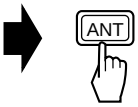

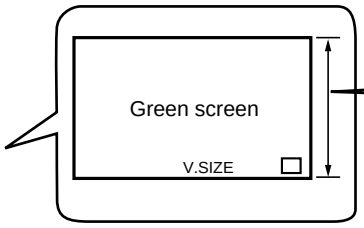

91% ± 2%

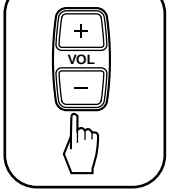

or

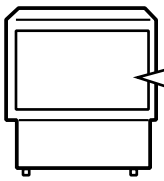

INPUT TV
General broadcasting

Adjust the size so that the picture is completely displayed on the screen.

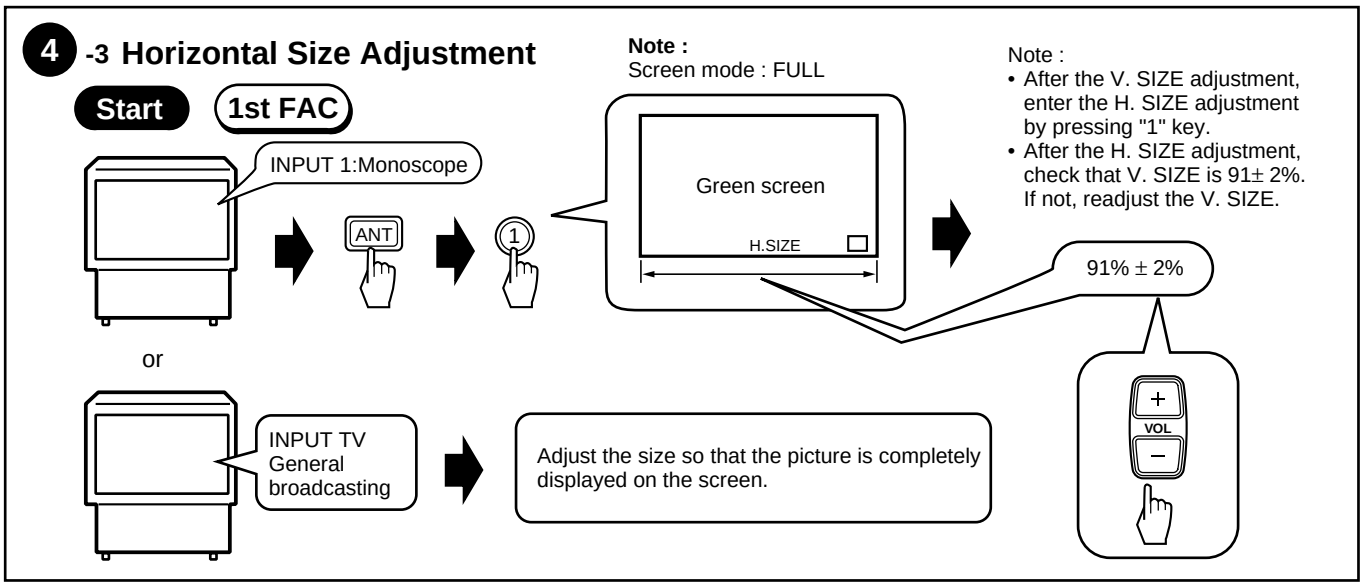

• Reference

The H PHASE adjustment is required if the left or right part of the screen becomes black, as illustrated below, depending on the format of the input signal (Ex. component 31.5 kHz, RGB 33K etc.).

Ex. Component 31K

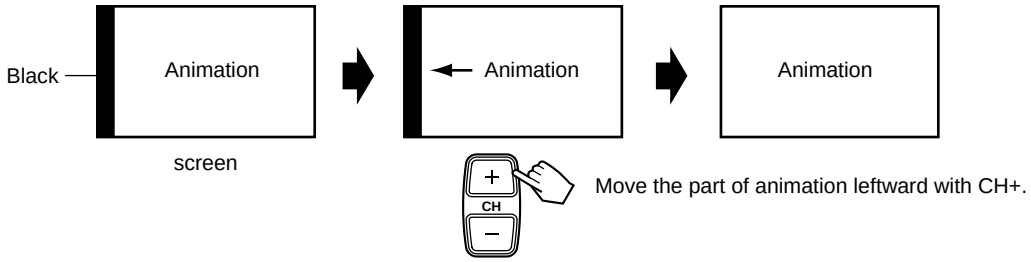

• About H. PHASE

In principle, adjustment of the data for the H. PHASE is not required.
Check whether the H. PHASE data are the factory-preset values, as indicated below:

Key No.	SD-533HD5 SD-643HD5
3 : H PHA (15K)	– 3
CH+ : H PHA (31K)	– 4
CH- : H PHA (33K)	13
9 : H PHA (31K RGB)	– 1
0 : H PHA (33K RGB)	16

15K : CONPOSITE, S COMPONENT (480i)
31K : COMPONENT (480P)
33K : COMPONENT (1080i)

The screen moves to the right or the left if the above data are in variance. (See the above figures.)

Note :
H PHASE is set in factory shipment by the most suitable value. But, there is the case that screen is missed as an upper figure occurs by the signal format of other apparatus to be connected to.
A screen can be improved as the following by the readjustment. However, attention is necessory because in convenience may occur when connected to another apparatus.

5 CONVERGENCE ADJUSTMENT

1. Procedures

1. When replacinf the DIGITAL CONV. Assy, replace the EEPROM of new DIGITAL CONV. Assy with the EEPROM of old DIGITAL CONV. Assy.
2. Check the initial data for the convergence adjustment.
3. Perform the coarse adjustment for the green to roughly correct distortion of the green.
4. Fine-adjust the green to eliminate any distortion. The green becomes the standard for the red and the blue.
   If necessary, repeat steps 3 and 4. Green adjustment is completed.
5. Perform the coarse adjustment for the red by roughly converging the red with the green.
6. Fine-adjust the red until the red is completely converging with the green.
   If necessary, repeat steps 5 and 6. Red adjustment is completed.
7. Perform the coarse adjustment for the blue by roughly converging the blue with the green.
8. Fine-adjust the blue until the blue is completely converging with the green.
   If necessary, repeat steps 7 and 8. Blue adjustment is completed.
9. Display the green, red, and blue colors at the same time to check the convergence. Readjust the convergence if necessary.

2. Prior to Adjustment

There are five screen modes, and convergence adjustment is required for each mode. For adjustment, input the following video signal:

Table 1 Input signal

Screen Mode	Input Signal
1. FULL (FULL, 4:3 NORMAL) 2. ZOOM (ZOOM) 3 CINEMA (CINEMA WIDE) 4. NATURAL (NATURAL WIDE)	NTSC (480i) signal
5. FULL for HD (HD/DTV)	HD/DTV (1080i) signal

NTSC : Stable signal source, such as an SG or an LD/DVD player.
HD : Stable signal source, such as an HD SG or a DTV tuner (SH-D09, etc.)

When CRTs are replaced or when the deflection yoke is moved, perform the deflection yoke adjustment, horizontal and vertical size adjustments, and centering magnet adjustments before the convergence adjustment. (See Pages 116, 118 and 119.)

3. Convergence Adjustment

3.1 Replacement of the EEPROMs Inside the DIGITAL CONV. Assy

IC1203: 24LC128(I)P

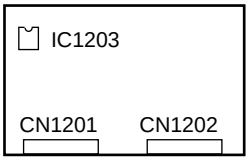

DIGITAL CONV. ASSY

The data stored in the EEPROMs are as follows:

IC1203
- OFFSET CONVER. MODE 1 (DFH, DFV)
- OFFSET CONVER. MODE 3
- Factory-preset values for convergence
- User-adjusted values for convergence (CENTER, MULTI-POINT)

IC1402
- OFFSET CONVER. MODE 1 (except DFH and DFV)
- OFFSET CONVER. MODE 2

3.2 Confirmation of Convergence Data

The convergence coarse adjustment modes change cyclically, as shown below, with each press of the INPUT4 key in FACTORY mode:

Convergence coarse adjustment

INPUT 4 key (pressed once) : OFFSET CONVER. MODE 1
↓
INPUT 4 key (pressed twice) : OFFSET CONVER. MODE 2
↓
INPUT 4 key (pressed three times) : OFFSET CONVER. MODE 3
Cyclical change

Check whether the data of MODE 1 and MODE 2 are as shown in Table 2.

The cross-hatch signal is generated inside the unit, and is automatically displayed in OFFSET CONVER. mode and MANUAL CONVERGENCE mode. You can turn on and off the cross-hatch signal with the YELLOW key.

Screen indication

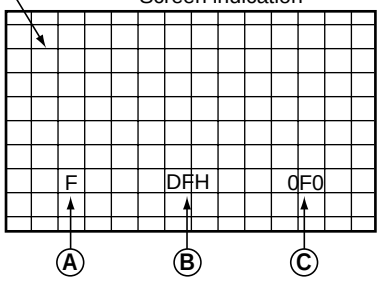

Ⓐ

Screen mode:
F : FULL Z : ZOOM C : CINEMA
N : NATURAL H : FULL for HD
The Screen modes change cyclically with each press of the SCREEN mode key.

Ⓑ

Adjustment items can be selected with the numeric keys.
See Table 2.

Ⓒ

Adjustment data:

MAX	1FF
	100
	001
CNT	000
	3FF
	2FF
MIN	200

Data can be adjusted with the VOL+ and VOL- keys.

IC1402: 24LC08B(I)P

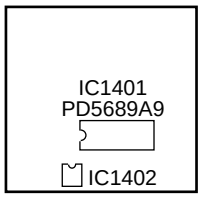

VIDEO IP SERVICE ASSY

Table 2 OFFSET CONVER DATA

OFFSET CONVER MODE 1						
Numeric Key	Adjustment Item	Screen Mode				
		FULL	ZOOM	CINEMA	NATURAL	HD FULL
1	DFH	1D0	1D0	1D0	1D0	1D0
2	DFV	0A0	0A0	0A0	0A0	0A0
3	DF1	00F	00F	00F	00F	00F
4	DF2	000	000	000	000	000
5	HPP	14C	14C	14C	14C	14A
6	HPW	00B	00B	00B	00B	00C
7	HTP	02C	02C	02C	02C	02F
8	VTP	033	029	033	02A	00F

OFFSET CONVER MODE 2						
Numeric Key	Adjustment Item	Screen Mode				
		FULL	ZOOM	CINEMA	NATURAL	HD FULL
1	V1D	029	082	060	03E	026
2	V1C	020	020	020	020	01E
3	V10	000	000	000	000	000
4	VFP	003	01D	003	01A	036
5	HFP	122	122	122	122	122
6	H1R	001	001	001	001	001
7	HCP	00F	00F	00F	00F	00F
8	H10	015	015	015	015	015

The above offset convergence values are common to the SD-533HD5 and SD-643HD5.

If the offset convergence values are as indicated in Table 2, proceed to 3.3. If the values are not the same, adjust the values with the numeric keys and VOL +/– keys.

Example:
To check DFI in ZOOM mode of OFFSET CONVER. MODE 1
① Enter the FACTORY mode.
② Enter the OFFSET CONVER. MODE 1 by pressing the INPUT 4 key once.
③ Enter the ZOOM screen mode by pressing the SCREEN mode key once. (When the unit enters FACTORY mode, the screen mode automatically becomes FULL.)
④ Check the indication on the screen by pressing the numeric key 3.
Indication at the bottom of the screen : Z DFI 00F
If the adjustment value is 00F, adjustment is not required.
If the adjustment value is other than 00F, adjust with the VOL + or VOL- key so that the value becomes 00F.

3.3 Coarse Adjustment of the Green

(Proceed with 3.3 and afterwards when the DIGITAL CONV. Assy is not replaced.)
Select adjustment items (STATIC and SIZE of vertical and horizontal lines, etc.) for each GH and GV, and adjust to roughly eliminate distortion. (For GV, peripheral pin distortion adjustment is necessary.)
Press the INPUT 4 key three times to enter OFFSET CONVER. MODE 3.
Press the SCREEN mode key and proceed with the adjustment for each screen mode.

The cross-hatch signal is generated inside the unit, and is automatically displayed in OFFSET CONVER. mode and MANUAL CONVERGENCE mode. You can turn on and off the cross-hatch signal with the YELLOW key.

Screen indication

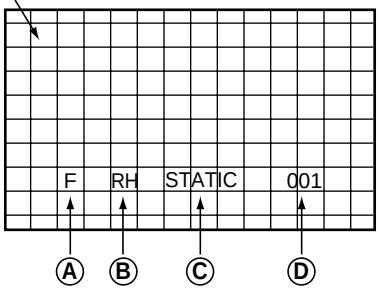

Ⓐ

Screen mode:
F : FULL
Z : ZOOM
C : CINEMA
N : NATURAL
H : FULL for HD

The Screen modes change cyclically with each press of the SCREEN mode key.

Ⓑ

Cyclically changes with the CH+ or CH- key as follows:

RH ↔ RV ↔ BH
↕ ↕
GV ↔ GH ↔ BV

Ⓒ

Adjustment items can be selected with the numeric keys. See Table below.

- **Waveforms adjustable in the coarse adjustment of the green**

Numeric Key	GH	GV
0	STATIC	STATIC
1	SKEW	SKEW
4	KEY	KEY
6	PIN	PIN
7	LIN	LIN
8	SIZE	SIZE

Ⓓ

Adjustment data:
MAX 1FF
100
001
CNT • 000
3FF
2FF
MIN 200

Data can be adjusted with the VOL+ and VOL- keys.

• **Pattern for each adjustment item**

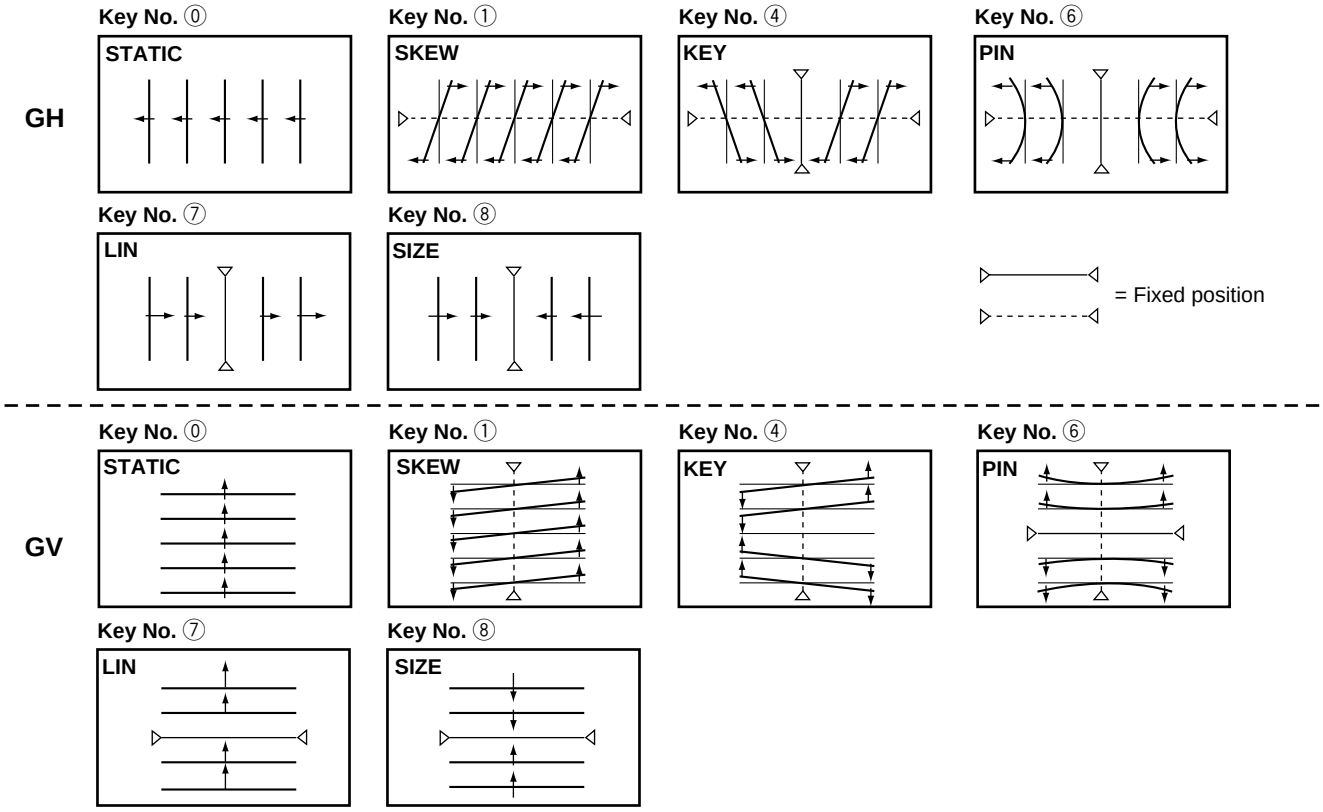

Note 1: When the Green CRT is replaced, or when the deflection yoke for the green is replaced, prior to the convergence adjustment, tune the center of the image to the center of the screen by turning the centering magnet.
Note 2: When the DEFLECTION SERVICE Assy or DIGITAL CONV. Assy is replaced, make coarse adjustment as shown in 3.3 above.

3.4 Fine-adjustment of the Green

Enter MANUAL CONVERGENCE mode by pressing the SET/ENTER key, and make adjustments. Repeatedly make the coarse adjustment as shown in 3.3 if necessary. Proceed with the adjustment for each screen mode. Adjusted values for the green become the standard for the red and the blue.

3.4.1

In MANUAL CONVERGENCE mode entered by pressing the SET/ENTER key, the display becomes as shown below:

Screen indication

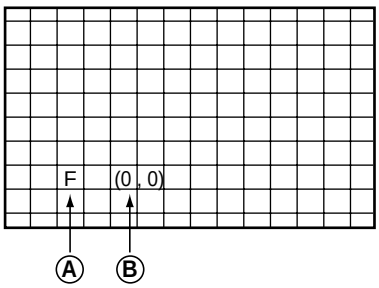

Ⓐ

Screen mode:
F : FULL
Z : ZOOM
C : CINEMA
N : NATURAL
H : FULL for HD

The Screen modes change cyclically with each press of the SCREEN mode key.

Ⓑ

Coordinates where the cursor (adjustment point) is located
There are 72 adjustment points (8,9) on the coordinates for FULL, ZOOM, CINEMA, NATURAL and FULL for HD modes, but the coordinates actually used for adjustment are as follows (the coordinates outside the ranges indicated below are outside the screen, and adjustment will not have any effect on the screen):
FULL : (0, 1) to (7, 9)
ZOOM : (0, 2) to (7, 8)
CINEMA : (0, 2) to (7, 9)
NATURAL : (0, 1) to (7, 8)
HD for FULL : (0, 1) to (7, 9)
(X, Y): X=abscissa, Y=ordinate
Some coordinates may be outside the screen and invisible.
The point at coordinates (0, 0) is at the upper left of the screen.

3.4.2

Move the cursor to a point to be adjusted with the cursor move keys.

Screen indication

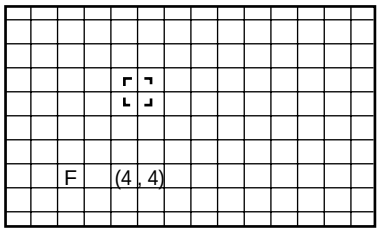

Note: The actual shape of the cursor is " [ ] ".
The position of the cursor in this figure is different from the actual position on the screen.

3.4.3
Press the SET/ENTER key when the point to be adjusted is determined.

Screen indication

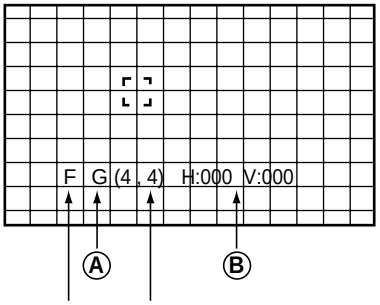

Screen mode Coordinates where the adjustment point is located

Ⓐ

Color to be adjusted:
G: GREEN, R: RED, B: BLUE
To change colors, use the CH+ or CH- key.
The colors change cyclically as follows:
With CH+ : R → B → G → R
With CH- : R → G → B → R

Ⓑ

H : ＊＊＊ Adjustment data in the horizontal direction
V : ＊＊＊ Adjustment data in the vertical direction
(＊＊＊= hexadecimal number)

Data	MAX	1FF
		100
		001
	CNT	000
		3FF
		2FF
	MIN	200

For adjustment, move the Line to the desired direction with the cursor keys.
To move the Horizontal Line upward, press the " ▲ " key. (The value decreases.)
To move the Horizontal Line downward, press the " ▼ " key. (The value increases.)
To move the Vertical Line to the left, press the " ◀ " key. (The value decreases.)
To move the Vertical Line to the right, press the " ▶ " key. (The value increases.)

- To select one color, use the SEARCH key for the red, SELECT key for the green, FREEZE key for the blue. Pressing this key toggles color muting on or off.
- To mute all the colors, press the DISPLAY key. To release muting, press the SEARCH, SELECT, or FREEZE key.
- To erase the cross hatch, press the YELLOW key. Pressing this key toggles between display of the cross hatch screen and the input screen.
- To change the brightness of the input screen, use the VOL+ or VOL- key. The brightness increases with the VOL+ key (CONTRAST +10) and decreases with the VOL- key (CONTRAST -40). (The brightness can be changed only in Fine-adjustment mode. The brightness of the cross hatch screen cannot be changed.)

3.4.4
When adjustment of the selected point is finished, press the SET/ENTER key, then adjust the other adjustment points by repeating 3.4.1 to 3.4.4.

3.4.5
Make the adjustment for the green in each screen mode, and use the green as the standard screen for the red and the blue. To change screen modes, use the SCREEN mode key.

Note: Some coordinates for adjustment points are located outside the screen. Be sure not to make adjustments on those points, because adjustment of those coordinates will have little effect on the screen.

● Adjustment Technique

1st step
Adjust so that the vertical and horizontal lines forming a cross at the center of the screen become straight. Check also the screen size and the linearity of the horizontal and vertical lines.

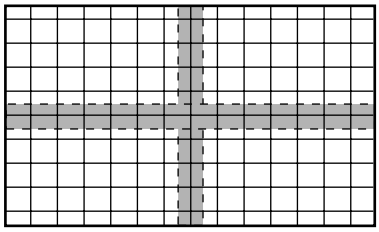

- See "3.3 Coarse adjustment of the green."
  Adjust GH STATIC, SKEW and SIZE, and GV STATIC, SKEW, PIN and SIZE to correct the screen location, tilt, screen information volume, and peripheral pin distortion.
- See "3.4 Fine-adjustment of the green."
  Fine-adjust the linearity of the vertical and horizontal lines forming a cross at the center of the screen.

Note: In principle, only the selected point is changed in MANUAL CONVER. mode. However, as the adjusted data (amount of adjustment) increase, peripheral points may be affected. So be sure not to greatly change the adjustment data of one point, but change peripheral points at the same time. See the examples below.

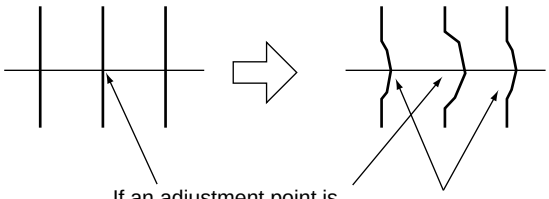

If an adjustment point is greatly moved to the right, Peripheral points may be affected.

In a case of an error in convergence:

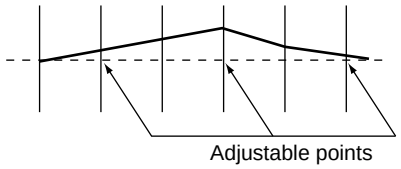

Good adjustment:

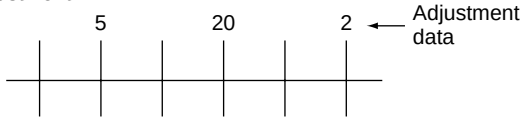

Bad adjustment:

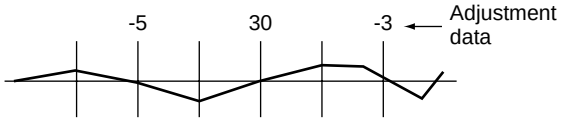

2nd step

Adjust so that the vertical lines become straight, taking care to preserve proper screen information volume and the linearity. Adjust the right half of the screen first, then the left half. (See 3.4.)

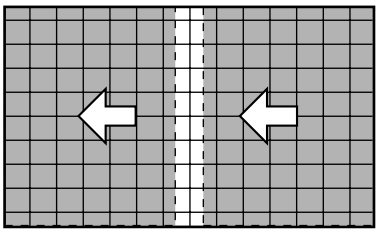

Right half : Adjust from the edge toward the center.
Left half : Adjust from the center toward the edge.

3rd step

Adjust so that the horizontal lines become straight. Adjust the upper half of the screen first, then the lower half. (See 3.4.)

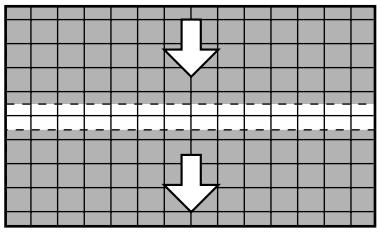

Upper half : Adjust from the edge toward the center.
Lower half : Adjust from the center toward the edge.

4th step

Repeat 2nd and 3rd steps to take total balance. Then the adjustment for the green is completed.
To return from the fine adjustment mode to the coarse adjustment mode, press the MENU key once, then the INPUT 4 key.

Note: When the MENU key is pressed to quit MANUAL CONVERGENCE mode, the display will be unstable for several seconds. This is because the adjustment data are being written to the EEPROMs, and is not a malfunction. Do not perform any operation (power on/off, or pressing keys on the remote control unit or on the main unit, etc.) during this period, because doing so may affect your adjustment data.

3.5 Coarse Adjustment of the Red

After the green adjustment is completed, quit MANUAL CONVERGENCE mode by pressing the MENU or MUTING key, then press the INPUT 4 key three times to enter OFFSET CONVER. MODE 3.
Select adjustment items for RH and RV, and roughly correct distortion to converge with the green. Adjustment is required for each screen mode

For adjustable items of the red and the blue, see the following table.

Numeric Key	RH	RV	BH	BV
0	STATIC	STATIC	STATIC	STATIC
1	SKEW	SKEW	SKEW	SKEW
4		KEY		KEY
5	SUBPIN		SUBPIN	
6		PIN		PIN
7	LIN	LIN	LIN	LIN
8	SIZE	SIZE	SIZE	SIZE

• **Pattern for each adjustment item**

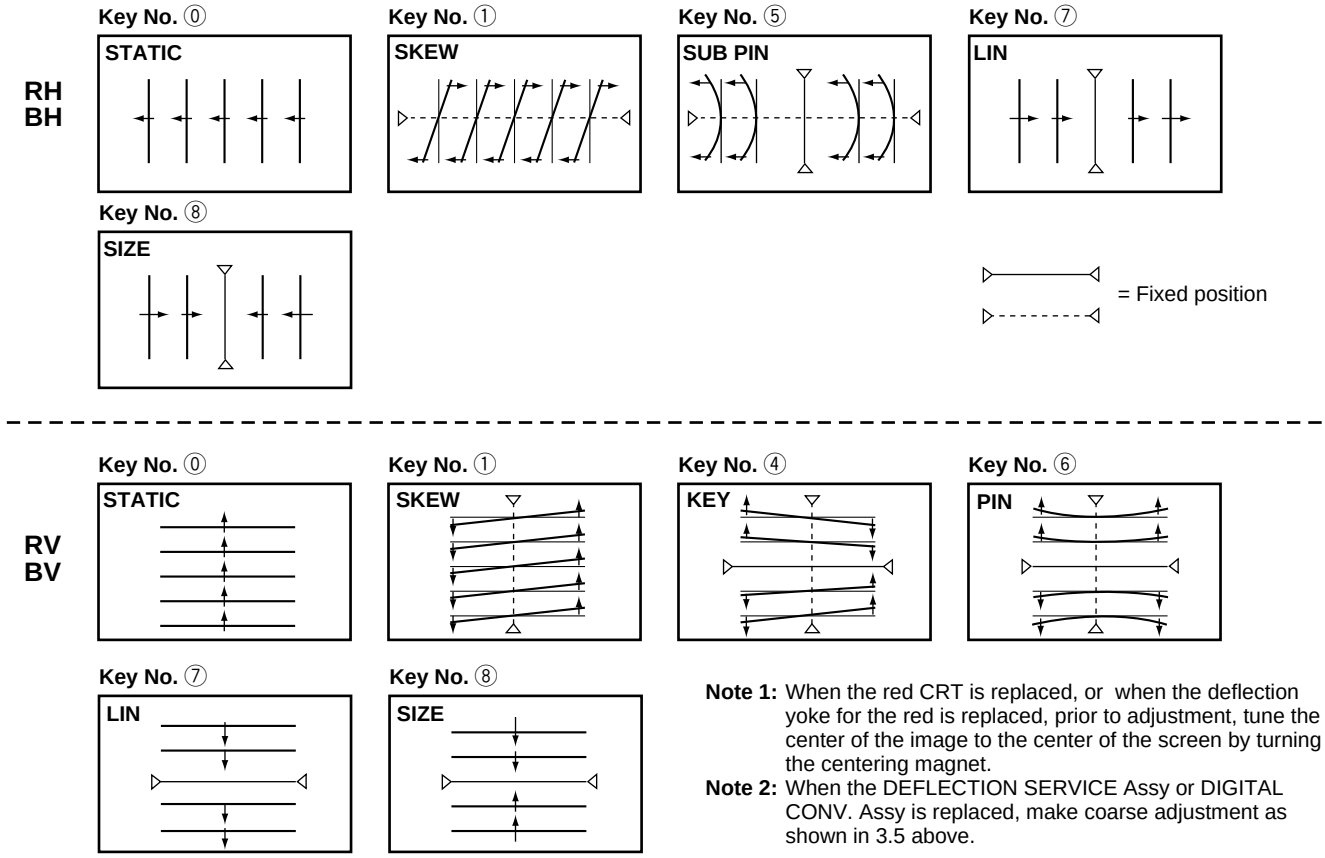

Note 1: When the red CRT is replaced, or when the deflection yoke for the red is replaced, prior to adjustment, tune the center of the image to the center of the screen by turning the centering magnet.

Note 2: When the DEFLECTION SERVICE Assy or DIGITAL CONV. Assy is replaced, make coarse adjustment as shown in 3.5 above.

3.6 Fine-adjustment of the Red

To fine-adjust the red, press the SET/ENTER key to enter MANUAL CONVERGENCE mode. Repeat the coarse adjustment described in "3.5 Coarse Adjustment of the Red" if necessary. Make adjustment for each SCREEN mode, and eliminate distortion to converge with the green.

3.6.1

Press the SET/ENTER key to enter MANUAL CONVERGENCE mode, and make adjustment in the same manner as with the green. First, adjust the vertical and horizontal the red lines at the center of the screen so that they converge with the green center lines.

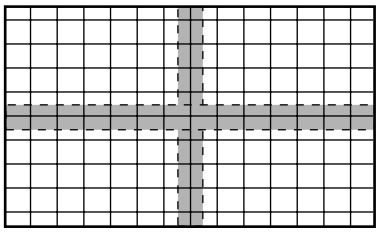

3.6.2

Adjust the red vertical lines so that they converge with the green vertical lines. Proceed to adjustment of the right half of the screen, then the left half. Adjustment should be done from the part where convergence is greatly dislocated.

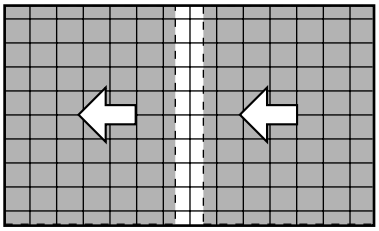

3.6.3

Adjust the red horizontal lines so that they converge with the green horizontal lines. Proceed to adjustment of the upper half of the screen, then the lower half. Adjustment should be done from the part where convergence is greatly dislocated.

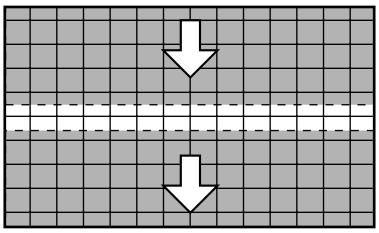

3.6.4

Repeat the adjustments described in 3.6.2 and 3.6.3 so that all the red vertical and horizontal lines converge with the green lines. (Completion of one screen mode)

3.6.5

Repeat procedures 3.6.2 through 3.6.4 for the other screen modes. (Completion of the red adjustment)

3.7 Coarse Adjustment and Fine Adjustment of the Blue

Make coarse and fine-adjustments of the blue in the same manner as with the red, described in 3.5 and 3.6.

3.8 Confirmation of Adjustment

After the green, red, and blue adjustments are finished, check convergence errors with the patterns for all three colors on the monitor.
Check the patterns in all SCREEN modes, and if any error in convergence is recognized, readjust convergence in MANUAL CONVER. mode.

Note: Be sure NOT to change the green pattern during readjustment.

IMPORTANT!

(1) When all the adjustments are completed, or when adjustment should be temporarily interrupted, adjustment data must be written to the EEPROM, in the following manner:

When all the adjustments are completed, or to interrupt adjustment, press the MENU key to quit Convergence Adjustment mode. The display will be unstable for several seconds, but this is because the data are being written to the EEPROM. Wait without doing anything until the display becomes stable, which means writing of data to the EEPROM is finished.
If the power of the TV is turned off (standby) during Convergence Adjustment mode (coarse and fine-adjustments), turn on the TV, enter FACTORY mode, and enter Convergence Adjustment mode by pressing the SET/ENTER key. Then press the MENU key. The data will be written to the EEPROM as described above.

(2) Do NOT turn off the main power during or after convergence adjustment.
If you do so, the adjusted data may be lost. If the data are lost, you must make all the adjustments again.

(3) When the CENTER POINT (test cross) or MULTI-POINT (user convergence) adjustments have been made by a user, and if the unit enters FACTORY Convergence Adjustment mode (with the INPUT4 and SET/ENTER keys), the user's adjustment data will be all cleared and returned to the factory-preset values.
Be sure NOT to enter this Convergence Adjustment mode except when a repair related to convergence or a repair that requires convergence adjustment later, is needed.
If you inadvertently enter Convergence Adjustment mode, readjust the convergence.

6 White Balance Adjustment

6 -1 Contrast Adjustment

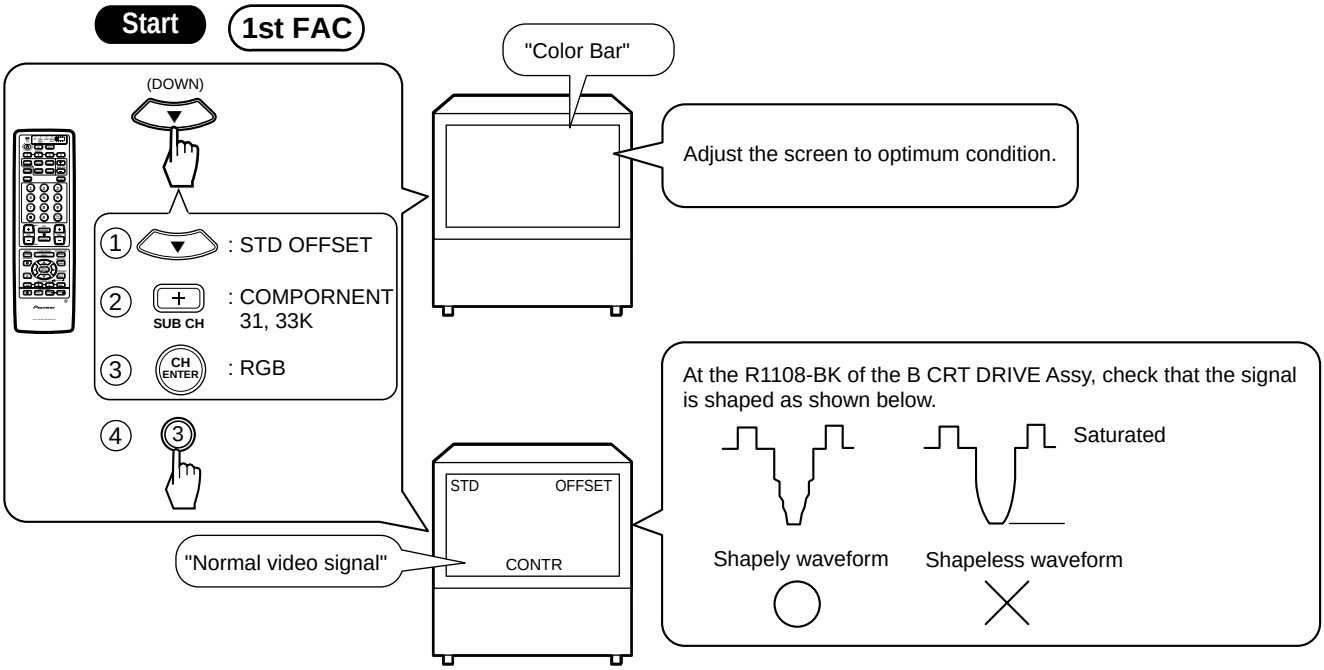

After the STD adjustment is complete, adjust the COMP 31K and 33K RGB.

6 -2 White Balance Adjustment

This mode is to set the standard picture quality for a normal picture.

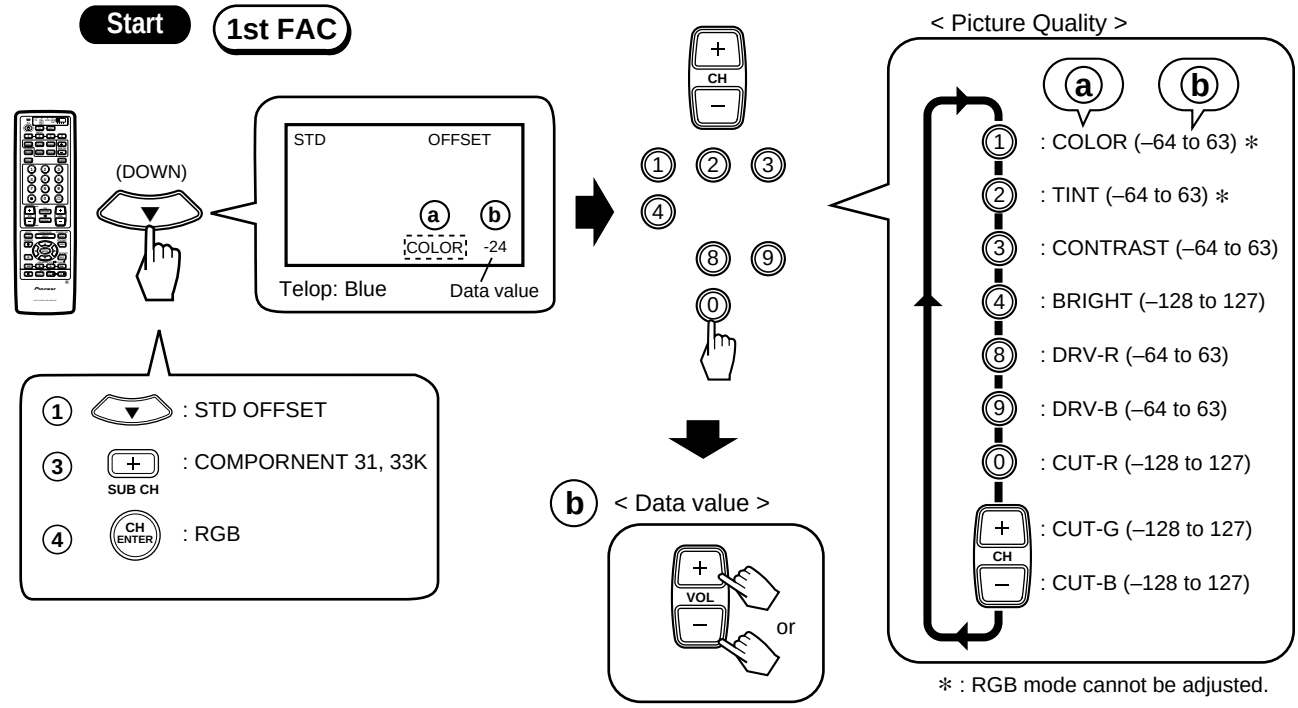

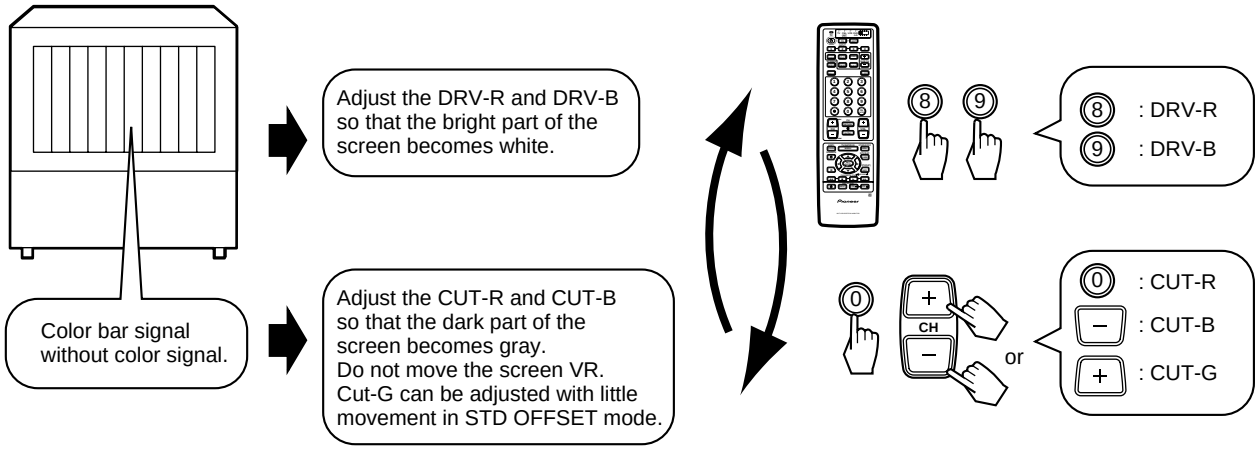

Note :
Refer to the following adjustment procedure.

● **Adjustment Procedure of White Balnce**

OFFSET Data Table

COLOR TEMP Setting	**Without RGB Input**			**RGB Input**		
	LIVE	FILM STD	FILM THEATER		LIVE	FILM
	K	L	M		γ	Y
User Mode	THEATER	GAME		THEATER	GAME (RGB)	
	E	F		V	J	
Input Signal	TV	COMPORNENT 15K	COMPORNENT 31K 33K	RGB		
	B	C	D	T		
	STD OFFSET					
	A					

Adjustments are required for A, D and T in the table above. Data in other parts are fixed. (I="0")
Proceed with the adjustments in the following order:

Adjustment	**Direct key**		**Picture quality data on the screen**
(1) STD OFFSET	DOWN	A	Adjustment of all standard picture qualities
(2) COMPONENT 31, 33K	SUB CH+	A+D	Adjustment of D
(3) RGB	CH ENTER	A+T	Adjustment of T

Make adjustment only for items described as ADJ in the following table.
Do NOT change other data.
Other data are adjusted in factory shipment by 3 data of the following table . (refer to page 129.)

- First, perform "(1) STD OFFSET", then perform adjustments (2) and (3) so that the same picture quality (color temperature) as achieved in (1) is obtained.
- When readjusting, once "(1) STD OFFSET" is adjusted, the data for other input signals (component, etc.) revert to the factory-preset values, in principle.
- After the adjustment of STD OFFSET is completed, check other picture quality modes by switching color temperatures and signals. It is OK if picture quality does not deviate greatly when input signal is changed (composite, component 15K, etc.). Furthermore, it is OK if color temperature changes when color remperarure is changed.

6 -3 Color/Tint Adjustment

Start **1st FAC**

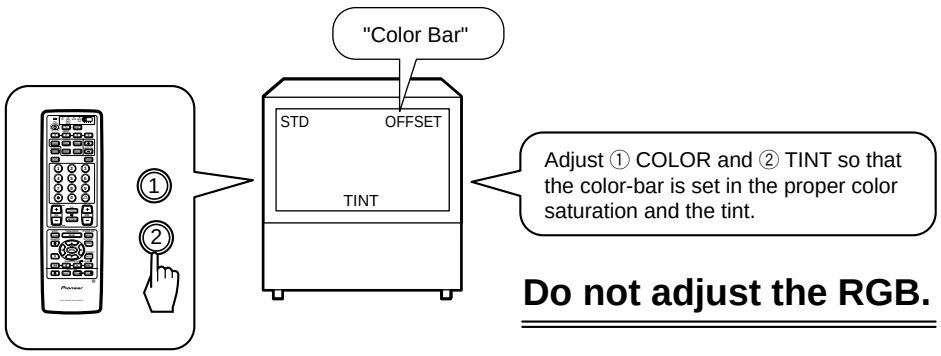

Do not adjust the RGB.

OFFSET DATA (VIDEO)

ADJ :Adjustment item
The numerical value is shipping a set value in the factory.
A set value is data of 2001.6 present provinces.

DIRECT KEY

OFFSET MODE		MODEL
KEY	ADJ NAME	SD-533HD5 SD-643HD5
DOWN		
STD OFFSET A		
1	COLOR	ADJ
2	TINT	ADJ
3	CONTRAST	ADJ
4	BRIGHT	ADJ
5	SHARPNESS	6
6	DETAIL	0
7	S. V. M	0
8	R DRV	ADJ
9	B DRV	ADJ
0	R CUT	ADJ
CH+	G CUT	ADJ
CH–	B CUT	ADJ
SUB CH –		
COMPONENT 15K C		
1	COLOR	0
2	TINT	0
3	CONTRAST	0
4	BRIGHT	0
5	SHARPNESS	0
6	DETAIL	0
7	S. V. M	0
8	R DRV	0
9	B DRV	0
0	R CUT	0
CH+	G CUT	0
CH–	B CUT	0
SUB CH+		
COMPONENT 31, 33K D		
1	COLOR	ADJ
2	TINT	ADJ
3	CONTRAST	ADJ
4	BRIGHT	+15
5	SHARPNESS	– 9
6	DETAIL	0
7	S. V. M	– 6
8	R DRV	ADJ
9	B DRV	ADJ
0	R CUT	ADJ
CH+	G CUT	ADJ
CH–	B CUT	ADJ
RED		
TV OFFSET B		
1	COLOR	– 15
2	TINT	0
3	CONTRAST	0
4	BRIGHT	0
5	SHARPNESS	0

DIRECT KEY

OFFSET MODE		MODEL
KEY	ADJ NAME	SD-533HD5 SD-643HD5
BLUE (cyclically)		
THEATER OFFSET E		
1	COLOR	– 33
2	TINT	– 5
3	CONTRAST	– 17
4	BRIGHT	0
5	SHARPNESS	0
6	DETAIL	0
8	R DRV	– 2
9	B DRV	– 1
0	R CUT	5
CH+	G CUT	4
CH–	B CUT	6
GAME OFFSET F		
1	COLOR	0
2	TINT	0
3	CONTRAST	– 40
4	BRIGHT	0
5	SHARPNESS	0
6	DETAIL	0
8	R DRV	– 6
9	B DRV	– 9
0	R CUT	11
CH+	G CUT	9
CH–	B CUT	16
THEATER OFFSET for RGB V		
3	CONTRAST	– 16
4	BRIGHT	0
8	R DRV	– 5
9	B DRV	1
0	R CUT	– 11
CH+	G CUT	– 7
CH–	B CUT	– 14
GAME OFFSET for RGB J		
3	CONTRAST	– 36
4	BRIGHT	0
8	R DRV	– 8
9	B DRV	– 4
0	R CUT	– 8
CH+	G CUT	– 5
CH–	B CUT	– 9

DIRECT KEY

OFFSET MODE		MODEL
KEY	ADJ NAME	SD-533HD5 SD-643HD5
CH ENTER		
RGB OFFSET T		
3	CONTRAST	ADJ
4	BRIGHT	ADJ
8	R DRV	ADJ
9	B DRV	ADJ
0	R CUT	ADJ
CH+	G CUT	ADJ
CH–	B CUT	ADJ
SWAP		
COLOR TEMP FILM for STD L		
3	CONTRAST	– 1
8	R DRV	9
9	B DRV	– 16
0	R CUT	– 2
CH+	G CUT	1
CH–	B CUT	6
SLEEP		
COLOR TEMP Film for THEATER M		
3	CONTRAST	– 2
8	R DRV	7
9	B DRV	– 20
0	R CUT	– 1
CH+	G CUT	1
CH–	B CUT	7

DIRECT KEY

OFFSET MODE		MODEL
KEY	ADJ NAME	SD-533HD5 SD-643HD5
GREEN (cyclically)		
COLOR TEMP LIVE for STD K		
3	CONTRAST	0
8	R DRV	– 4
9	B DRV	7
0	R CUT	2
CH+	G CUT	0
CH–	B CUT	– 2
COLOR TEMP LIVE for RGB γ		
3	CONTRAST	0
4	BRIGHT	0
8	R DRV	– 3
9	B DRV	6
0	R CUT	– 2
CH+	G CUT	– 2
CH–	B CUT	– 3
COLOR TEMP FILM for RGB Y		
3	CONTRAST	0
4	BRIGHT	0
8	R DRV	4
9	B DRV	– 18
0	R CUT	1
CH+	G CUT	0
CH–	B CUT	3

7 Panel Adjustment

Start 1st FAC

- Mode for adjusting the brightness, contrast of the gray part (panel) of the 4:3 normal screen.

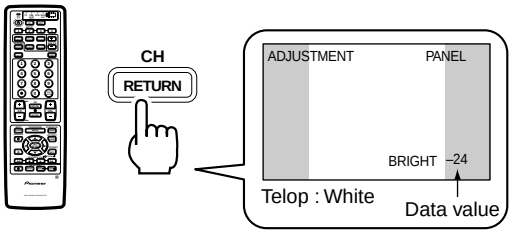

<Data value section>

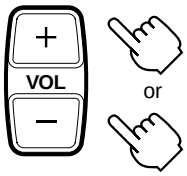

<Adjustment item section>

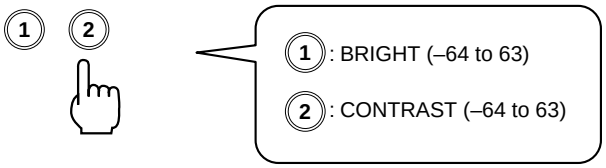

Procedures

① Send the black-burst signal to the INPUT 1 connector.
Enter Adjustment mode by following the procedures described above.

② With BRIGHT, adjust the gray part (panel) of the screen.
By observing R1058-GK of the G CRT DRIVE Assy with the oscilloscope, , adjust the brightness level which is low by 20V from Black level of the main screen.

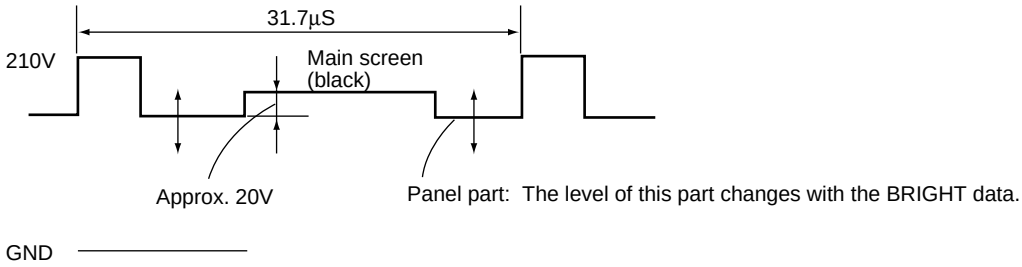

③ Switch the input signal to a 100%-white signal.
Adjust the panel part and the main screen with CONTRAST.
Observe the same site as described in Step ② above, and adjust the amplitude of the luminosity.

Adjust so that the level of the luminosity of the panel and that of the main screen become the same.

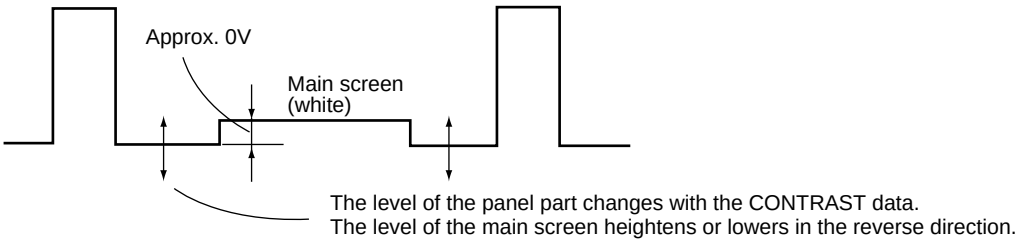

❽ Panel Adjustment for 480P

Start 1st FAC

- Mode for adjusting the brightness, contrast of the gray part (panel) of the 4:3 normal screen of 480P signal.

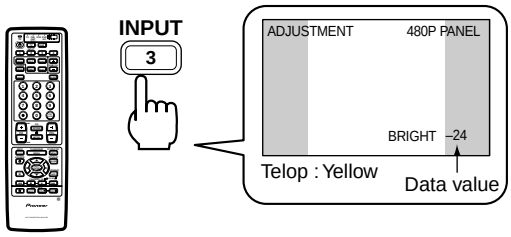

<Data value section>

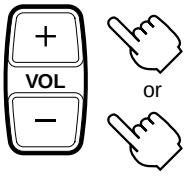

<Adjustment item section>

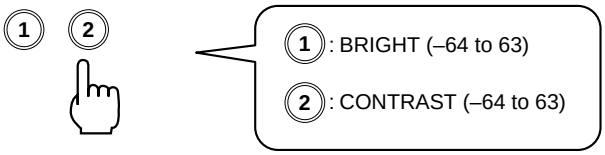

Note :
- The adjustment procedures are the same as those described in " ❼ Panel Adjustment," except for the following:
- Send the black burst of the 480P signal to the INPUT 1 connector.
- Send a 100%-white 480P signal to the INPUT 1 connector.
- When 480P signal is not obtained and adjustment does not complete, input a value the same as BRIGHT and the CONTRAST data value that adjusted with step ❼.

After the adjustment was completed, perform the following operations.

(**Purposes:** To match the picture quality of SUB screen with MAIN screen by two screen display)

① Observe R1058-GK of the G CRT DRIVE Assy with the oscilloscope (20V/div.).
② Input the white 100% NTSC signal to the Composite input of INPUT 1.
③ Enter the 1ST Factory and press the ▲ key of the remote control unit.
(The main unit receives the composite signal of INPUT 1 then.)
④ The screen changes to two screen display (split screen) by pressing the 7 key, and enter the SUB CONTRAST Adjustment mode by pressing the 4 key.
⑤ Adjust VOL + or - keys so that the level of SUB screen becomes closest to the level of MAIN screen.

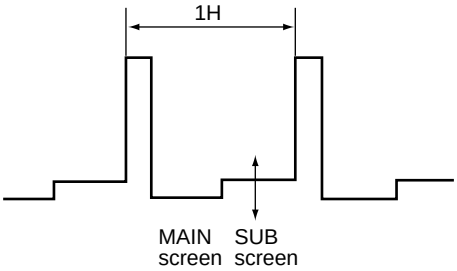

7. GENERAL INFORMATION

7.1 DIAGNOSIS

7.1.1 DIAGNOSIS METHOD

Various protection circuits are provided for this unit. When these protection circuits are activated, the power of the unit is shut down (P.D.: Power Down).
The defective parts can be easily diagnosed by observing the LEDs inside the POWER SUPPLY Assy.

1. D107 in the AWV1887 (For POWER SUPPLY Assy)
2. D111 in the AWV1887 (For DEFLECTION SERVICE Assy)

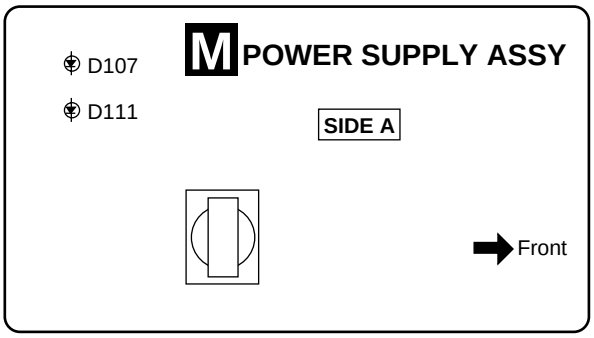

LED points

How to Diagnose a Failure

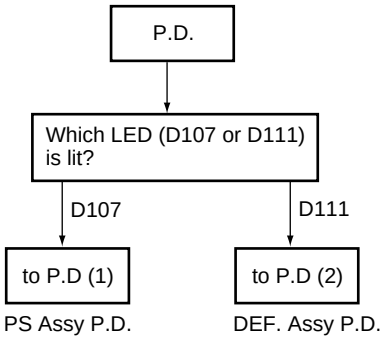

Note: There is a case that DEF. Assy P.D. works when there is a damage with the POWER SUPPLY Assy.

Example)
If there is not 9V, V. BLK does not come out. And P.D. hangs with the DEFLECTION SERVICE Assy more first than the POWER SUPPLY Assy.

1. P.D. (1)

Failure in the POWER SUPPLY Assy.
There are four main possibilities:
1. Abnormality in the regulator of the heater
2. Blown fuse(s) in secondary
3. Abnormality in AUDIO OUTPUT

Status	Causes	Check Items	Probable Defective Parts
D318 ANODE Hi	Abnormality in the regulator for the heater	The voltage of HT- at "+15V (HT-)" JP is NOT approx. 15 V, and that of the HT+ at "+21V (HT+)" JP is NOT approx. 22 V.	Q305, R319, D313, D312 (POWER SUPPLY Assy)
D305 ANODE Hi	Blown fuse(s)	The voltage HT+ (approx. 22 V) at "+21V (HT+)" JP is NOT supplied.	DEFLECTION SERVICE Assy
		The voltage (approx. 32 V) at R322 is NOT supplied.	IC901, IC902 (POWER SUPPLY Assy)
		The voltage (approx. 6 V) at R336 is NOT supplied.	VIDEO IP SERVICE Assy and SIGNAL Assy
D906 ANODE Hi	Abnormality in AUDIO OUTPUT	The SP line (CN901) is disconnected.	Connect the SP line.
		The voltage at the negative electrode of the C923 and C927 is 5.2 V or more.	C923, C927 (POWER SUPPLY Assy)

Note: The anode of the diode is high only for a short time after the power is turned on until the protection circuits are activated (P.D.)
The LEDs are lit by the HOLD circuit.

In a case when the power cannot be on with no LED lit, check the following:
1. Check if the FU201 fuse in the POWER SUPPLY Assy is blown.
2. Disconnect and check connector P11 (CN302) to see whether STB 5 V is supplied.
   If STB 5 V is supplied, replace the SIGNAL Assy. If STB 5 V is NOT supplied, replace the POWER SUPPLY Assy.
3. Disconnect and check connector P11 (CN302) to see whether AC CLK is supplied.
   If AC CLK is supplied, replace the SIGNAL Assy. If AC CLK is NOT supplied, replace the POWER SUPPLY Assy.

2. P.D. (2)

Failure in the DEFLECTION SERVICE Assy.
There are four main possibilities:
1. Overload detection
2. H. deflection stopping detection
3. X-ray protection

Status	Causes	Check Items	Probable Defective Parts
D503 ANODE Hi	Overload detection	It checks whether the parts of the account of the right have broken.	Q603 (short-circuited between D and S) Q511 (short-circuited between C and E) Q1001, Q1002, Q1051, Q1052, Q1101, Q1102 (CRT DRIVE Assy) Short D605 (short-circuited)
D512 ANODE Hi	Stopping H. deflection	Is the connector of the deflection yoke plugged in?	Plug in the connector.
		No HDRV signal at R548	IC1902 (VIDEO IP SERVICE Assy)
		No DH. BLK signal at D506 (Cathode)	Q508, Q511
D613 ANODE Hi	X-ray protection	No change in the ABL voltage (no DC change) at Pin 6 of the CN1401 when a 100%-white signal is repeatedly connected and disconnected	D1914 (short-circuited) of the VIDEO IP SERVICE Assy
			T601 (FBT) rare short
D807 ANODE Hi	V. deflection stopping	Check that the connector (D3) from the POWER SUPPLY Assy is plugged in to the DEFLECTION SERVICE Assy.	Plug in the connectors.
		Check that the connector (S6) from the SIGNAL Assy is plugged in to the DEFLECTION SERVICE Assy.	Plug in the connectors.
		Abnormality in V. BLK 2 waveform that is output from Pin 4 of the CN2303 in the SIGNAL Assy (too long a high period with the DC voltage on)	IC2401 (SIGNAL Assy)
		Abnormality in V. DRV waveform that is output from Pin 8 of the CN2806 in the SIGNAL Assy (too long a high period with the DC voltage on)	IC1902 (VIDEO IP SERVICE Assy)
		No waveform is output from Pin 4 of the CN505.	IC802

Note: The anode of the diode is high only for a short time after the power is turned on until the protection circuits are activated (P.D.) The LEDs are lit by the HOLD circuit.

Note that the power may be shut down when the voltages 120V, 21V, 15V, -20V, 5V and STB5V from the POWER SUPPLY Assy are not supplied because the DEFLECTION SERVICE Assy is powered by the POWER SUPPLY Assy.

When overload detection mechanism is activated, the 120 V line is short-circuited. If the power switch is set to ON again in this condition, there may be a case where the power cannot be turned on, with just a whining sound, and where only the D107 LED in the POWER SUPPLY Assy is lit. If this happens, first replace only the DEFLECTION SERVICE Assy, disconnect the AC cord from the AC outlet or turn the main power switch OFF, and wait for five minutes. Then, turn on the power again. If the condition is ameliorated, only the DEFLECTION SERVICE Assy is defective. If the same symptom occurs, replace the POWER SUPPLY Assy. In the latter case, the DEFLECTION SERVICE Assy may not be defective.

Be sure to check the fuses in the POWER SUPPLY Assy because one or more may be blown as a result of short-circuiting of the load circuit of the DEFLECTION SERVICE Assy.

If the FU302 and FU303 fuses are blown, see the following table:

Causes	Check Items	Probable Defective Parts
Too high loading on the CONVER. AMP	Check that waveform signals are output from Pin 3 and Pin 1 of the CN401, CN402 and CN403, and that the DC element is not added to the signals.	IC401, IC402
CONVER. MUTING not activated	Check that the electric potential of Pin 3 and Pin 4 of IC401 and IC402 are at the same level when the power is turned on.	Q404, Q402

4. Block Diagram of the Protection Circuit

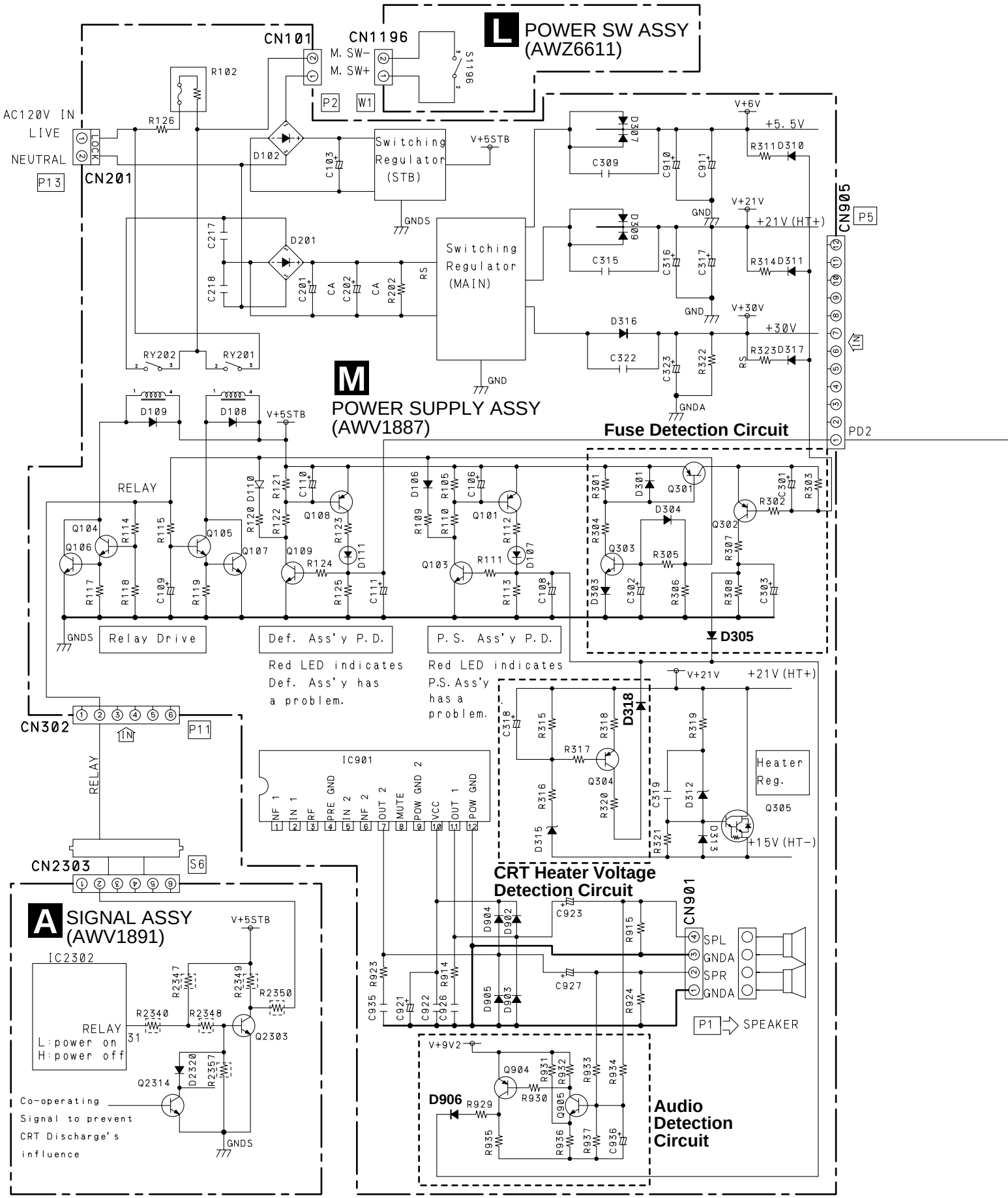

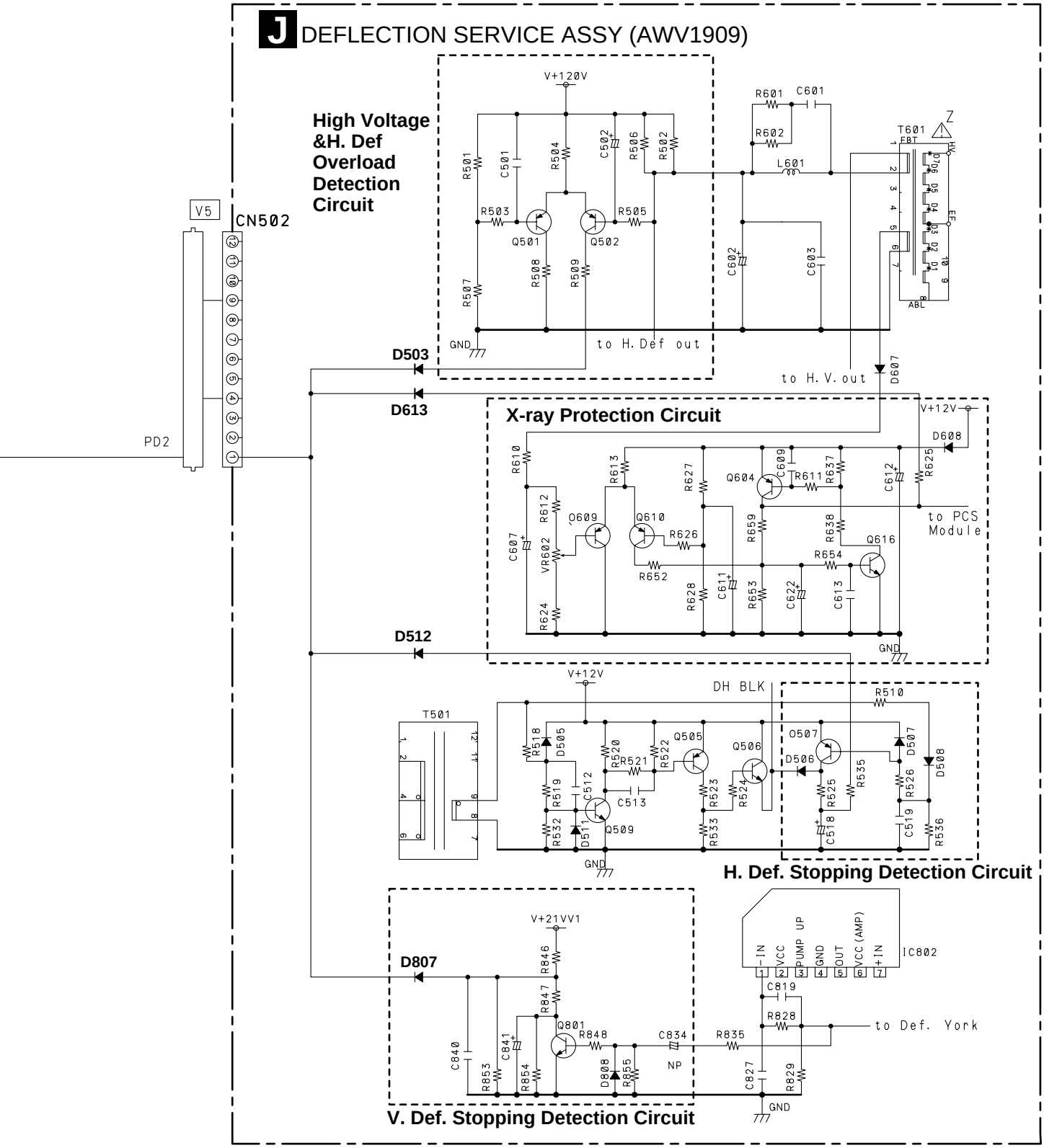
J DEFLECTION SERVICE ASSY (AWV1909)
High Voltage &H. Def Overload Detection Circuit
V+120V
R601
C601
R602
T601
EBT
HV
L601
R501
C501
R504
C502
R506
R502
R503
R505
Q501
Q502
R508
R509
R507
C602
C603
ABL
EF
GND
to H. Def out
to H. V. out
D607
V5
CN502
PD2
D503
D613
X-ray Protection Circuit
V+12V
D608
R610
R613
R627
Q604
C609
R611
R637
C612
R625
R612
Q609
Q610
R626
R659
R638
to PCS Module
C607
VR602
R652
Q616
R654
R624
R628
C611
R653
C622
C613
D512
DH BLK
R510
T501
R518
D505
R520
R521
R522
Q505
Q506
Q507
D506
D507
D508
R519
C512
C513
R523
R524
R535
R525
R526
R532
D511
Q509
R533
C518
C519
R536
H. Def. Stopping Detection Circuit
V+21VV1
D807
R846
R847
Q801
R848
C834
R835
IC802
-IN
VCC
PUMP UP
GND
OUT
VCC (AMP)
+IN
C819
R828
to Def. York
C840
C841
R853
R854
D808
R855
NP
C827
R829
V. Def. Stopping Detection Circuit

7.1.2 DISASSEMBLY

■ How to remove a front part

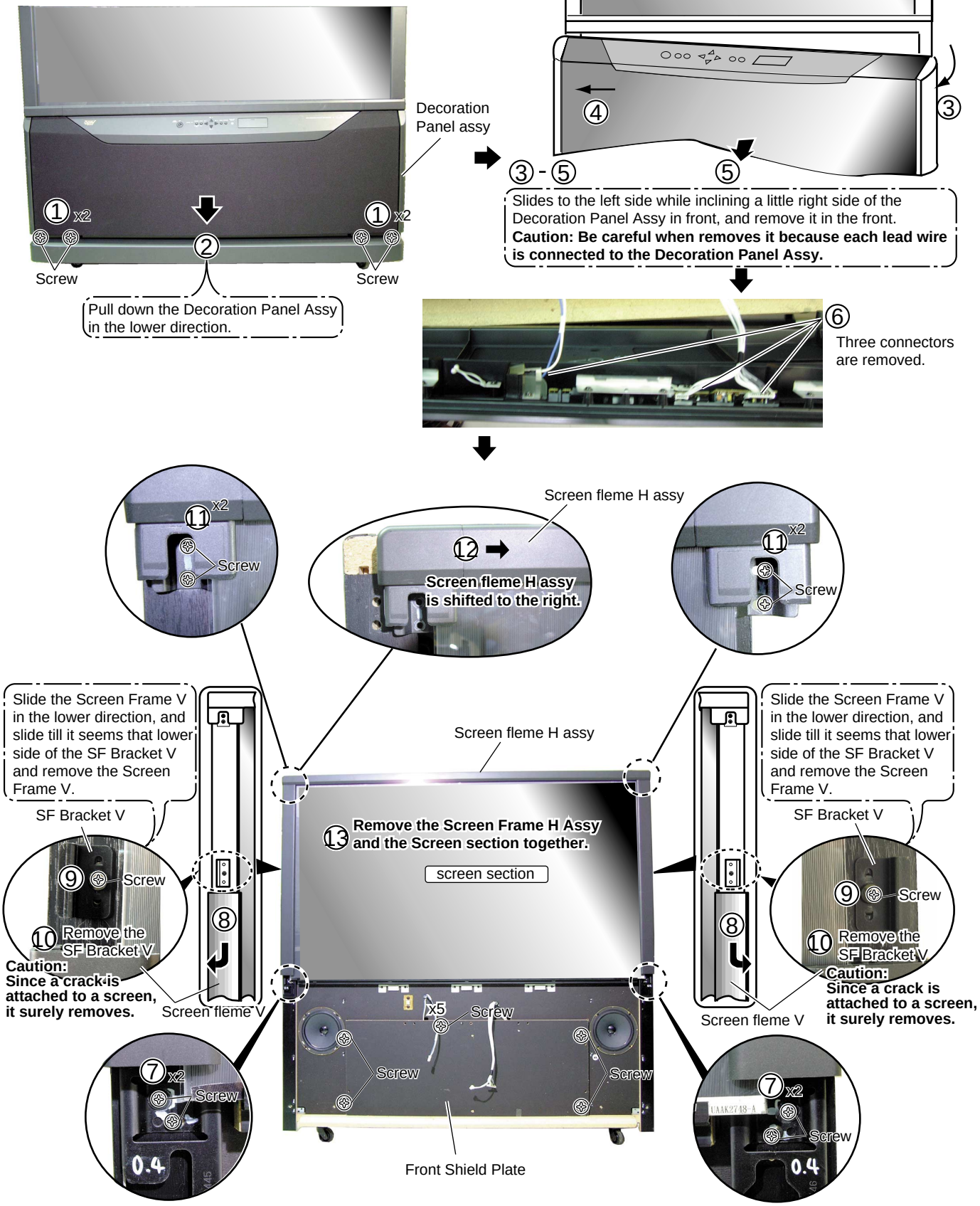

■ How to remove the screen (for adjusting Lens assemblies)

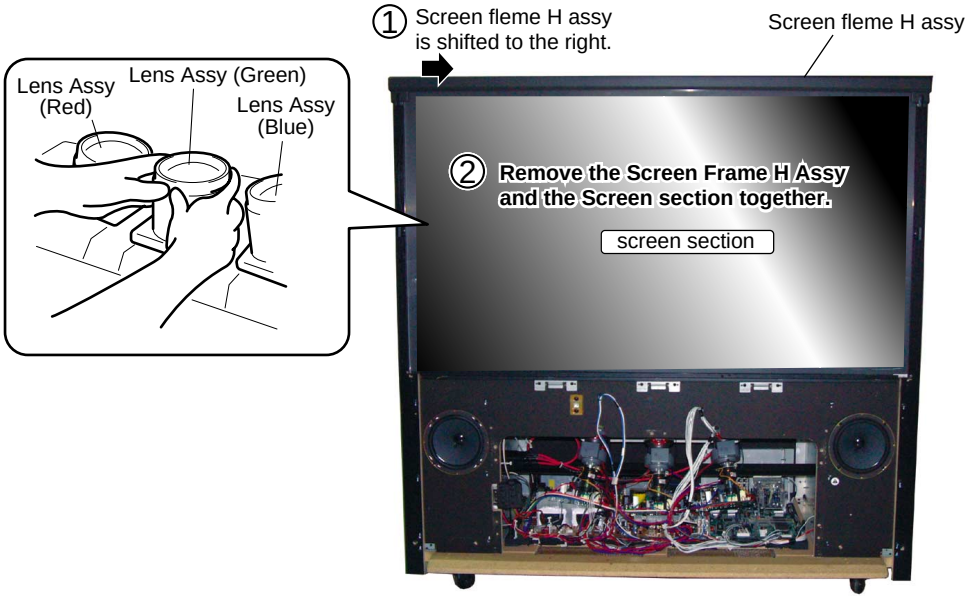

■ How to remove a Rear part

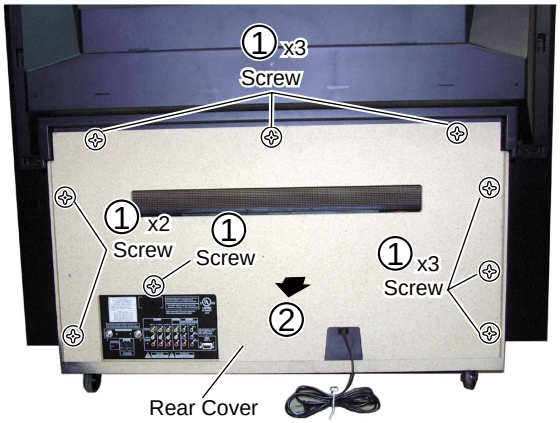

■ The notes on an assembly

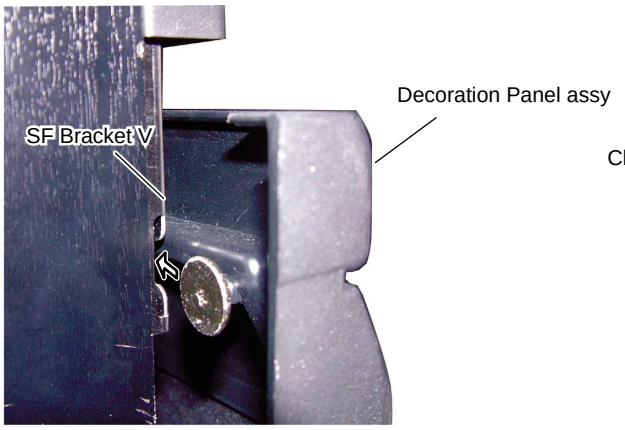

A Decoration Panel assy is set so that the joint of SF Bracket V may be suited.

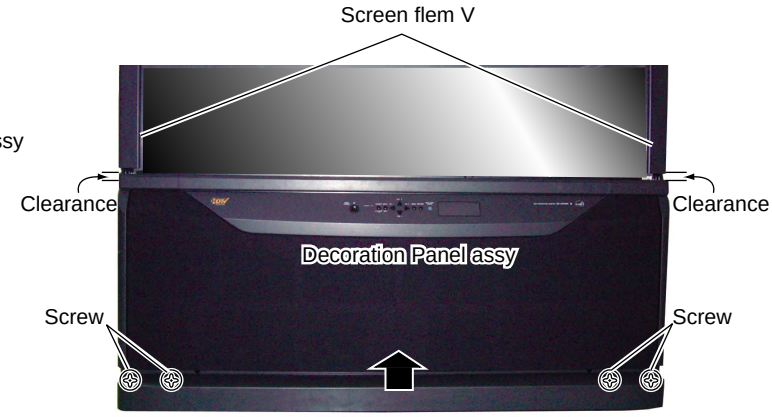

A screw stop is brought near and turned up so that the clearance between a decoration panel assy and screen flem V may be lost.

■ Disconnect the Anode Cable

WARNING :
Before disconnect the Anode Cable, turn off the power, unplug the AC plug and let the unit discharge for more than 1 minute.

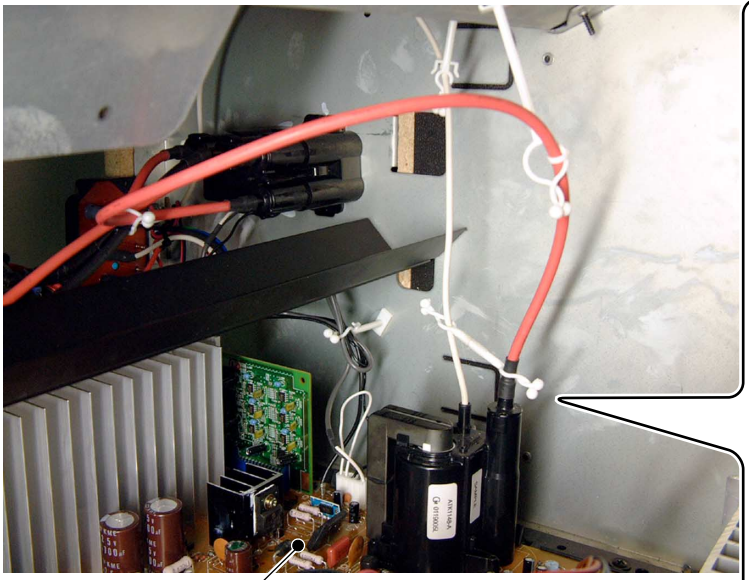

J DEFLECTION SERVICE ASSY

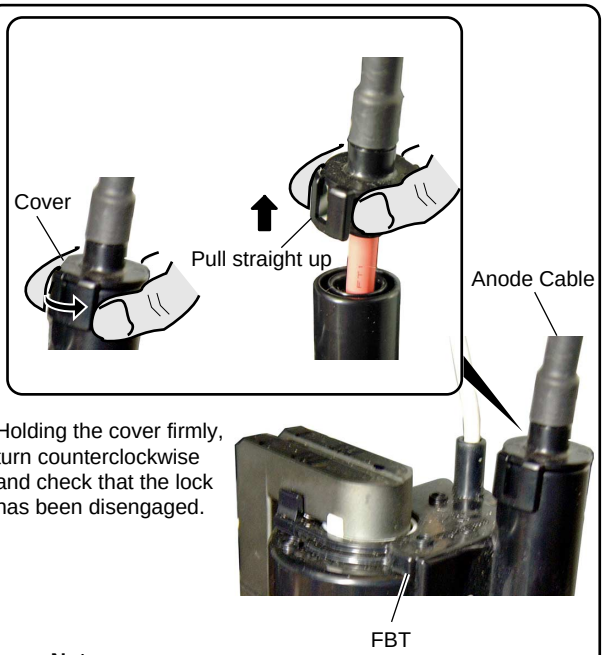

Note :
When reconnecting the cable, proceed in the reverse order. After reconnecting, tug on the cable to check that it is secure.

∗Confirm that is locked surely after put Anode Cable in the FBT.

7.1.3 WIRING DIAGRAM

● Front Section

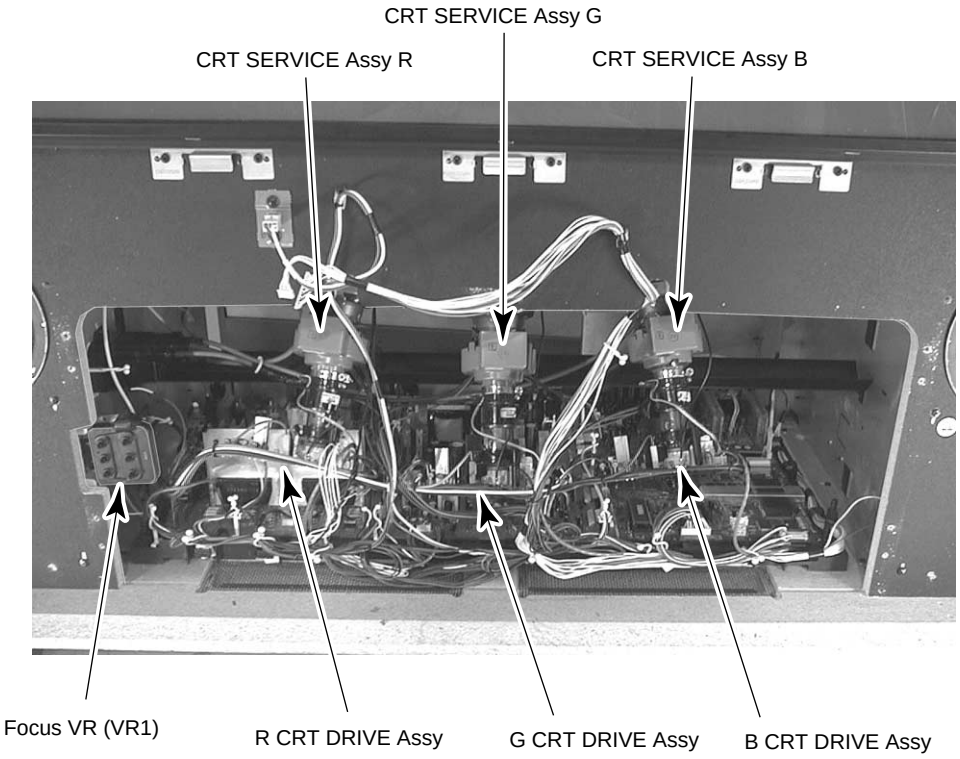

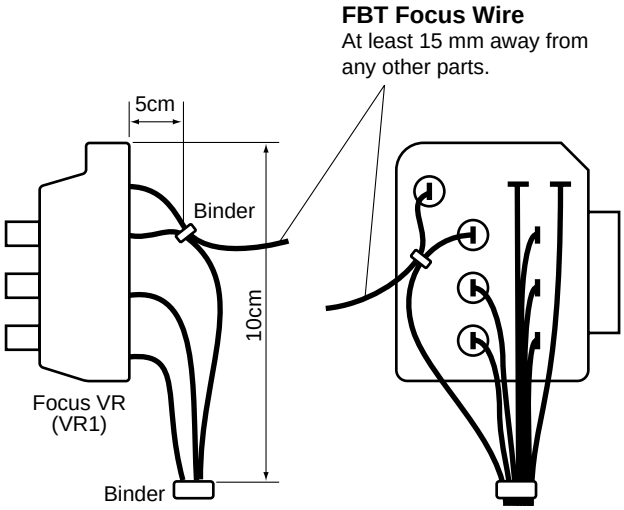

● Rear Section

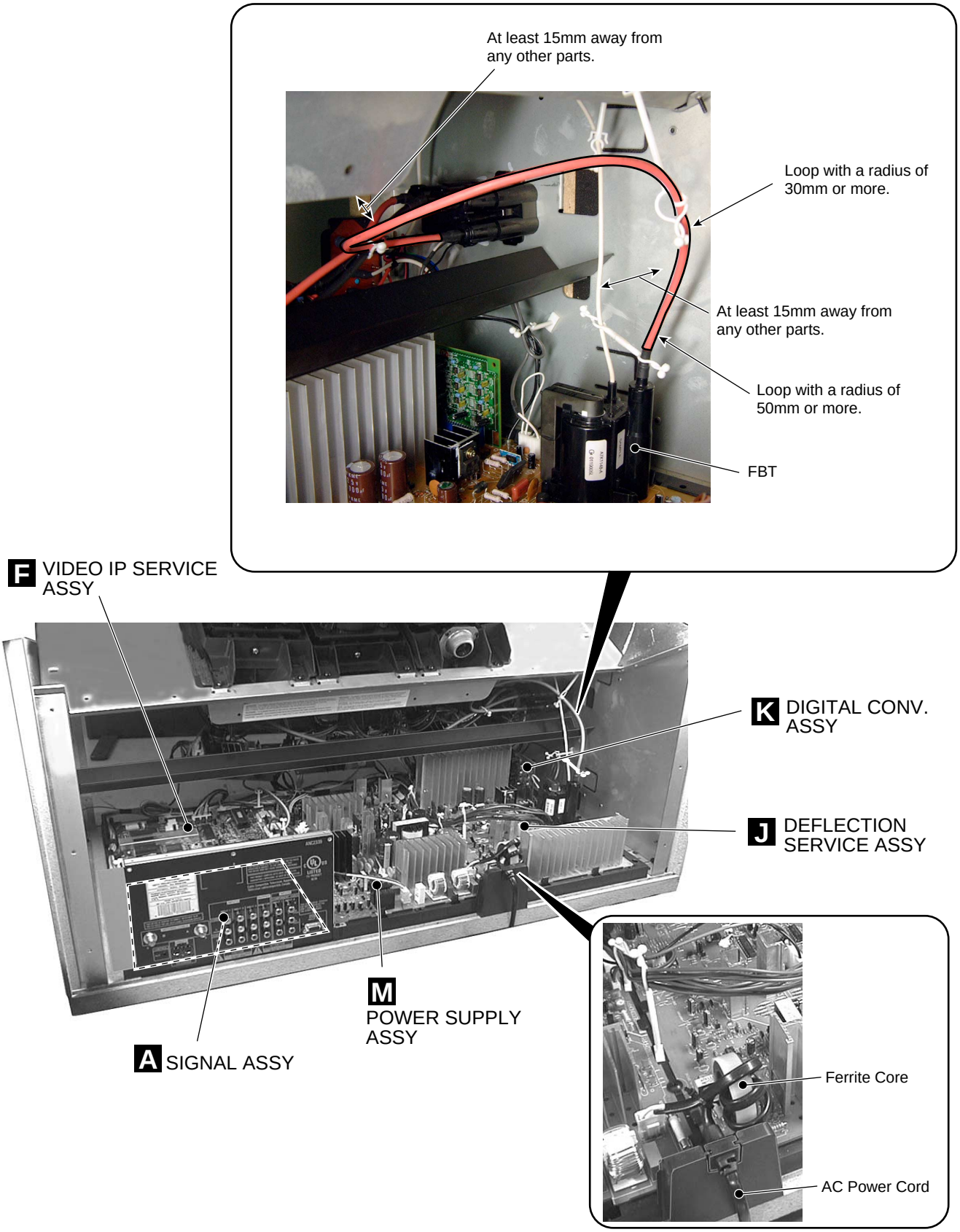

7.1.4 The method of power-on (for service)

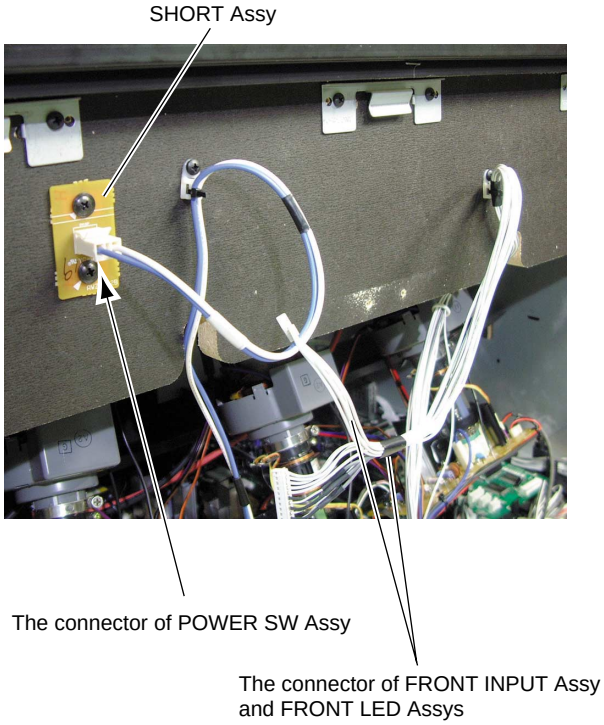

- When removes the Front Grille, remove the connectors from POWER SW Assy, FRONT INPUT Assy and FRONT LED Assy and remove the Grille. This set is not turned on the power in the state that removed the connectors.
  At this time, connect a connector that connected to the POWER SW Assy to the SHORT Assy, and can turn the MAIN POWER SW to ON.
  Be careful there is a case to be turned on the power in the state that front side of this set opens.
  In addition, the front input and front key do not work because each Assy does not connect it, but the remote control unit works in the same way normally.
  There is a Factory Key on the FRONT LED Assy.
  When enter the Factory mode, transfer a code with the remote control unit or connect the FRONT LED Assy. (Turn the Main Power SW to OFF when connects it.)

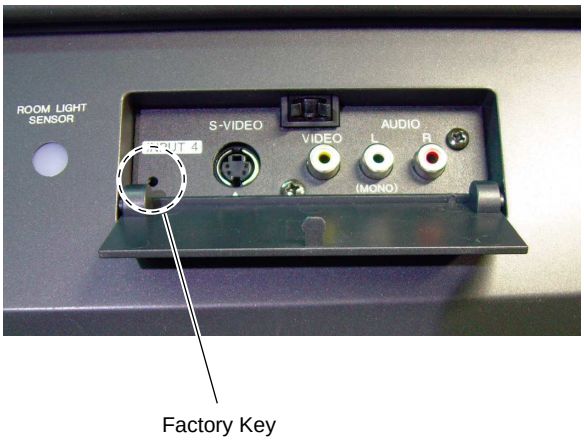

7.2 PARTS

7.2.1 IC

• The information shown in the list is basic information and may not correspond exactly to that shown in the schematic diagrams.

●List of IC

BD3867AS, CD0031AM, CXA2019AQ, CXA2079Q, LA4282, LA78045, M52065FP, M52347FP, NJM2283M, PQ30RV11, SDA9280, TA1316AN, TC74HC126AF, PD5688A9, PD5689A9

■ BD3867AS (POWER SUPPLY ASSY : IC902)

• Audio Sound Processor IC

● Block Diagram

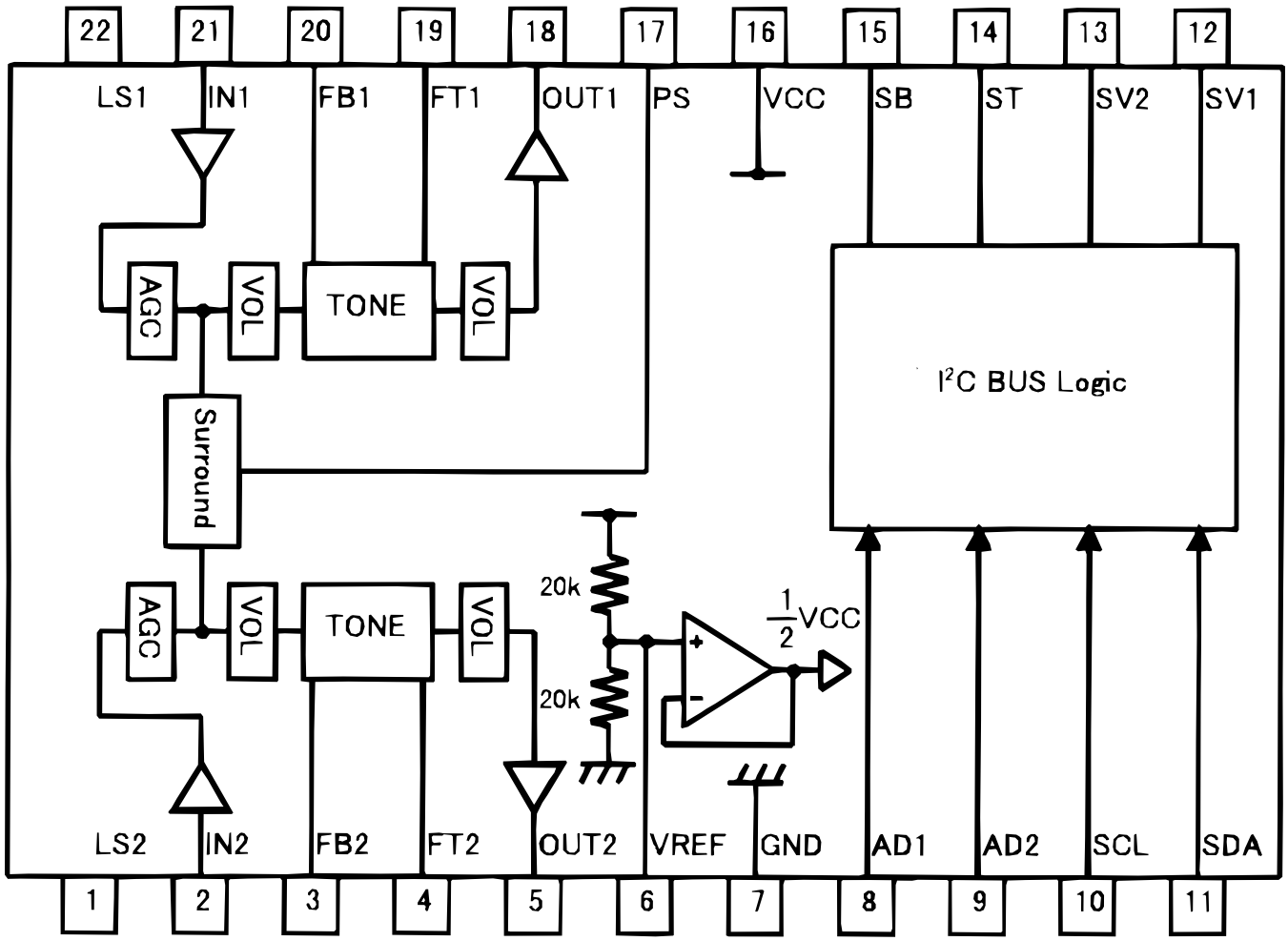

● Pin Function

Terminal Number	Terminal Name	Description	Terminal Number	Terminal Name	Description
1	LS2	AGC Level sensor terminal 2	12	SV1	1ch Volume shock sound integration terminal
2	IN2	2ch input terminal	13	SV2	2ch Volume shock sound integration terminal
3	FB2	2ch Bass fc setting terminal	14	ST	Treble shock sound integration terminal
4	FT2	2ch Treble fc setting terminal	15	SB	Bass shock sound integration terminal
5	OUT2	2ch output terminal	16	VCC	Power supply terminal
6	VREF	1/2 VCC terminal	17	PS	Phase Shift terminal
7	GND	Grounding terminal	18	OUT1	1ch output terminal
8	AD1	Slave address select terminal 1	19	FT1	1ch Treble fc setting terminal
9	AD2	Slave address select terminal 2	20	FB1	1ch Bass fc setting terminal
10	SCL	I^2C communication clock terminal	21	IN1	1ch input terminal
11	SDA	I^2C communication data terminal	22	LS1	AGC Level sensor terminal 1

■ CD0031AM (DIGITAL CONV. ASSY : IC1205)

- **16bit DAC IC**

● Block Diagram

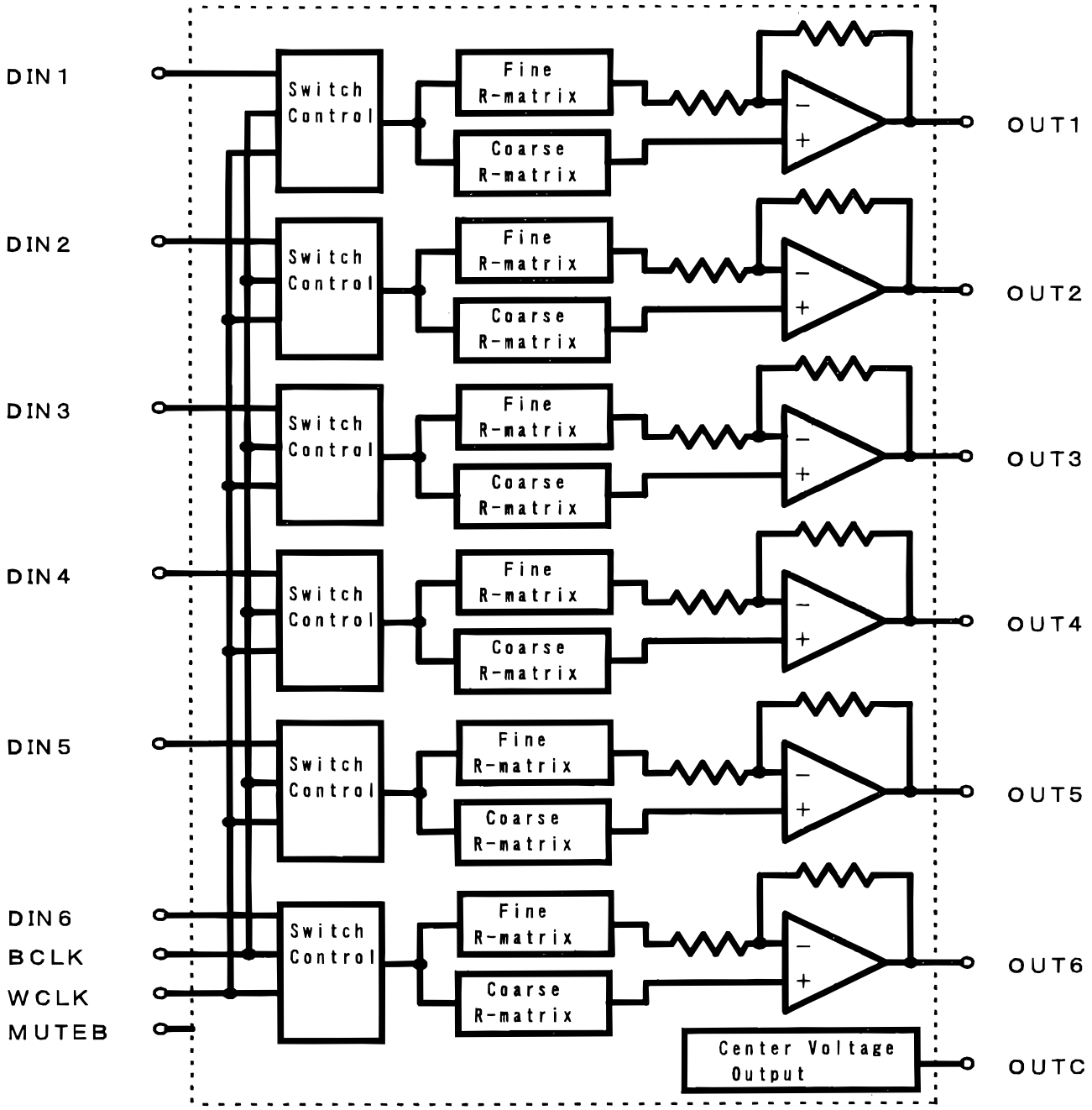

● Pin Function

No.	NAME	FUNCTION	No.	NAME	FUNCTION
1	DIN3	Serial Data Input for DAC3	25	OUTC	Center DAC Output
2	DIN2	Serial Data Input for DAC2	26	VDDC	Analog Power Supply for Center DAC
3	DIN1	Serial Data Input for DAC1	27	N.C.	Non Connection
4	BCLK	Bit Clock Input	28	N.C.	Non Connection
5	WCLK	Word Clock Input	29	GNDC2	Analog Ground for Center DAC
6	DGND	Digital Ground	30	N.C.	Non Connection
7	GND4	Analog Ground for DAC4	31	VDD2	Analog Power Supply for DAC2
8	OUT4	DAC4 Output (for DIN4)	32	REF2	Reference Voltage for DAC2
9	REF4	Reference Voltage for DAC4	33	OUT2	DAC2 Output (for DIN2)
10	VDD4	Analog Power Supply for DAC4	34	GND2	Analog Ground for DAC2
11	GND6	Analog Ground for DAC6	35	VDD3	Analog Power Supply for DAC3
12	OUT6	DAC6 Output (for DIN6)	36	REF3	Reference Voltage for DAC3
13	REF6	Reference Voltage for DAC6	37	OUT3	DAC3 Output (for DIN3)
14	VDD6	Analog Power Supply for DAC6	38	GND3	Analog Ground for DAC3
15	GND5	Analog Ground for DAC5	39	VDD1	Analog Power Supply for DAC1
16	OUT5	DAC5 Output (for DIN5)	40	REF1	Reference Voltage for DAC1
17	REF5	Reference Voltage for DAC5	41	OUT1	DAC1 Output (for DIN1)
18	VDD5	Analog Power Supply for DAC5	42	GND1	Analog Ground for DAC1
19	N.C.	Non Connection	43	DGND	Digital Ground
20	N.C.	Non Connection	44	DVDD	Digital Power Supply
21	N.C.	Non Connection	45	MUTEB	Low : Center Voltage Output High : Normal Output
22	N.C.	Non Connection	46	DIN6	Serial Data Input for DAC6
23	GNDC1	Analog Ground for Center DAC	47	DIN5	Serial Data Input for DAC5
24	N.C.	Non Connection	48	DIN4	Serial Data Input for DAC4

■ CXA2019AQ (SIGNAL ASSY : IC2702)

• NTSC/PAL Chroma Decoder

● Block Diagram

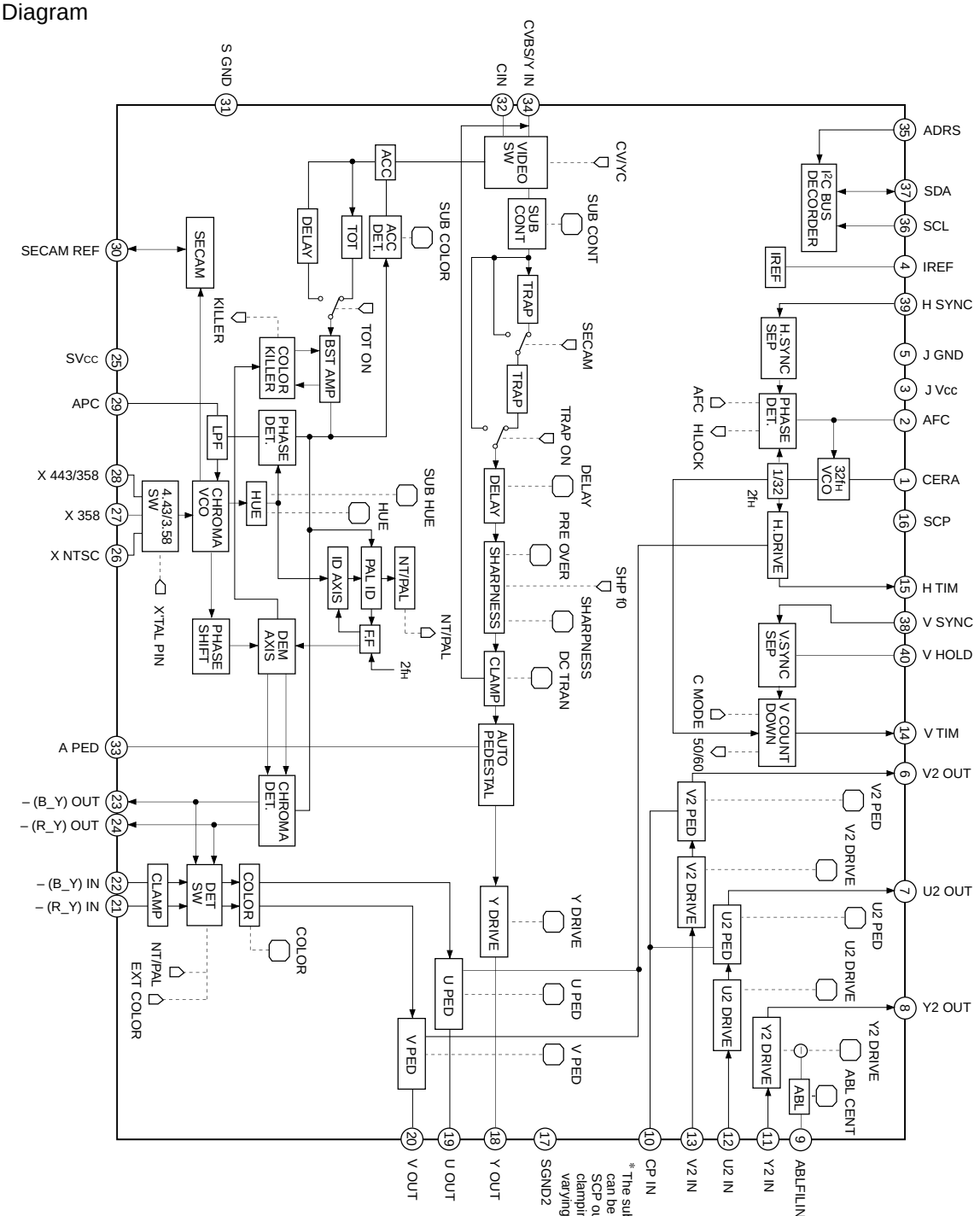

* The sub picture bright and white balance can be adjusted by receiving BGP or SCP output from the main picture Y/C/J, clamping the PINP PROC. output, and varying the DC of the clamped portion.

● Pin Function

Pin No.	Symbol	Pin voltage	Equivalent circuit	Description
1	CERA	—	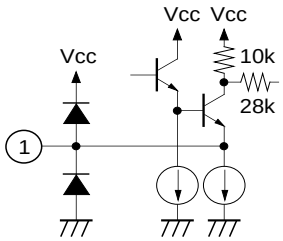	32fH (500 or 503.5kHz) ceramic oscillator connection.
2	AFC	—	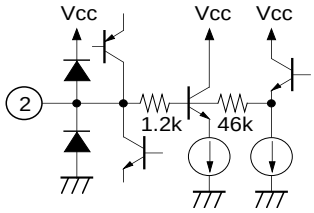	CR connection for AFC lag-lead filter.
3	JVCC	9.0V		Power supply.
4	IREF	1.8V	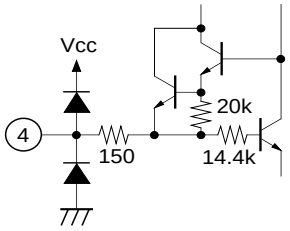	Connect a 10kΩ resistor between this pin and GND.
5	J GND	—		Jungle system (H/V) GND.
6 7	V2 OUT U2 OUT	3V	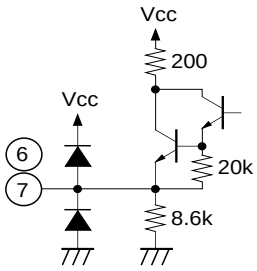	Reinput system outputs.
8	Y2 OUT	3V	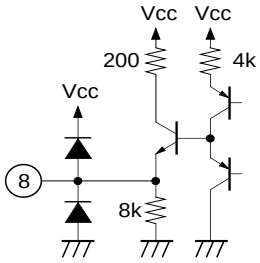	Reinput system output.

Pin No.	Symbol	Pin voltage	Equivalent circuit	Description
9	ABLFILIN	—	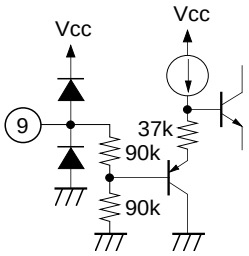	ABLFIL voltage input. Input the main picture Y/C/J ABLFIL voltage.
10	CP IN	—	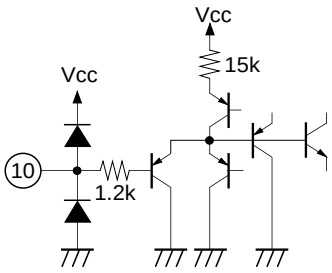	Reinput system clamp pulse input. Input the main picture BGP (SCP). Vth: 2.5V
11 12 13	Y2 IN U2 IN V2 IN	4V	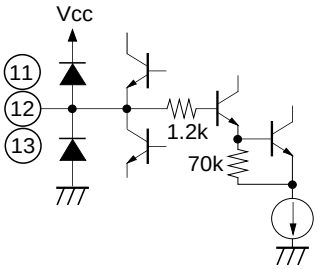	Reinput system inputs. Input via a capacitor.
14	V TIM	—	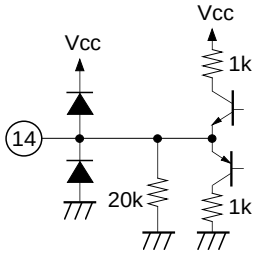	V timing pulse output. Outputs a 0 to 5V positive polarity pulse.
15	H TIM	—	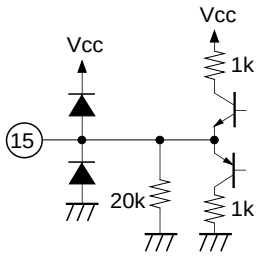	H timing pulse output. Outputs a 0 to 5V positive polarity pulse.

Pin No.	Symbol	Pin voltage	Equivalent circuit	Description
16	SCP	—	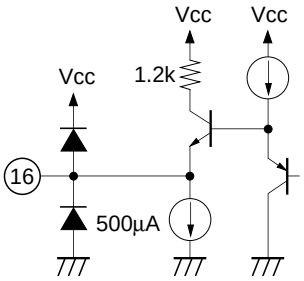	Outputs BGP and HBLK as SCP (sand castle pulse). The typ. waveform is as follows. 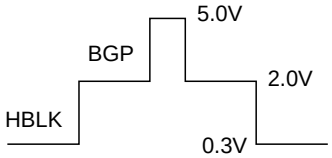
17	SGND2	—		GND.
18	Y OUT	3V	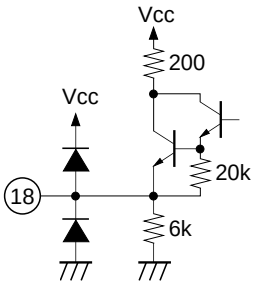	Y (luminance signal) output. Standard output level: 1.1Vp-p
19 20	U OUT V OUT	3V	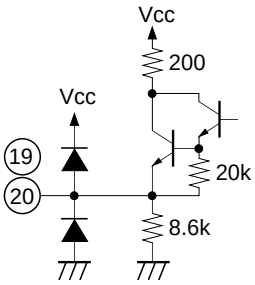	U/V (color difference signal) outputs. Output level: U = V = 1.2Vp-p (In case of setting data as shown in "I^{2}C BUS Register Initial Settings.")
21 22	– (R_Y) IN – (B_Y) IN	5.6V	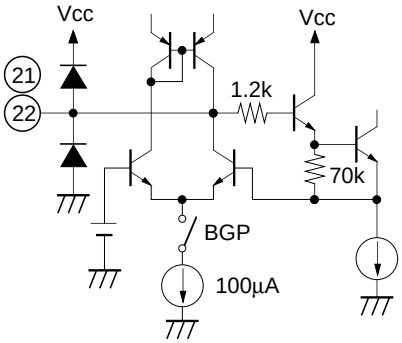	Color difference signal inputs. Input as negative polarity via a capacitor. Standard input levels: B-Y: 1.33Vp-p R-Y: 1.05Vp-p

Pin No.	Symbol	Pin voltage	Equivalent circuit	Description
23 24	– (B_Y) OUT – (R_Y) OUT	5.6V	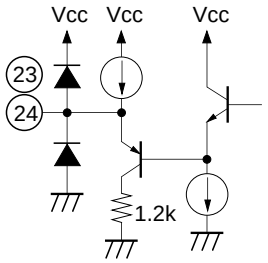	Color difference signal outputs. Output as negative polarity. Standard output levels: B-Y: 0.665Vp-p R-Y: 0.525Vp-p
25	SVcc	9.0V		Power supply.
26 27 28	X NTSC X 358 X443/358	—	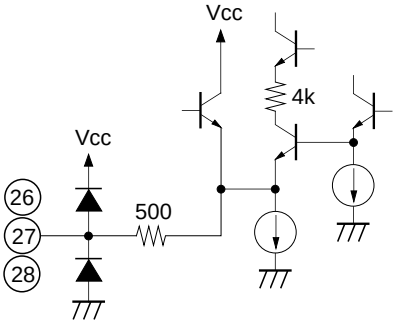	Crystal oscillator connections. Connect the PALN and 4.43MHz crystal to Pin 28. Connect the PALM crystal to Pin 27, and the NTSC crystal to Pin 26.
29	APC	—	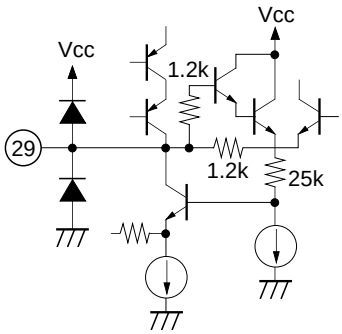	CR connection for APC lag-lead filter.
30	SECAM REF	1.5V	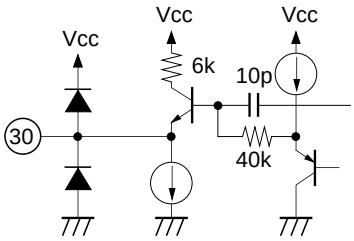	When the IC is set to SECAM identification mode, the 4.43MHz VCO oscillator waveform is output from this pin centering on DC 1.5V. If a 150µA current is led from this pin during this identification mode, the IC is set to SECAM mode. In SECAM mode, the 4.43MHz VCO oscillator waveform is output centering on DC = 5V only during the VBLK interval.
31	S GND	—		GND.

Pin No.	Symbol	Pin voltage	Equivalent circuit	Description
32	C IN	—	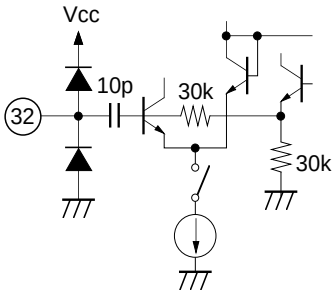	Chroma signal input. Standard input level (burst level) : 570mVp-p
33	A PED	—	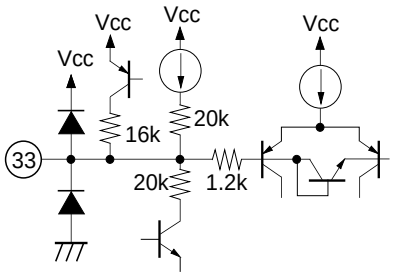	Black peak hold for auto pedestal (black expansion). Connect a capacitor.
34	CVBS/Y IN	—	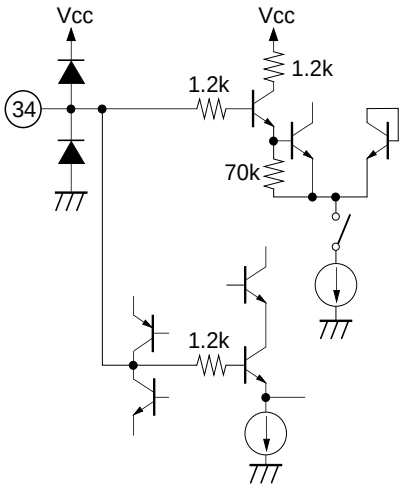	Y signal input. Input via a capacitor. Standard input level: 2Vp-p
35	ADRS	—	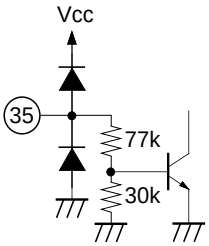	This pin is used to switch the slave address. Vcc: 9AH GND: 9EH Vth = 2.5 V

Pin No.	Symbol	Pin voltage	Equivalent circuit	Description
36 37	SCL SDA	—	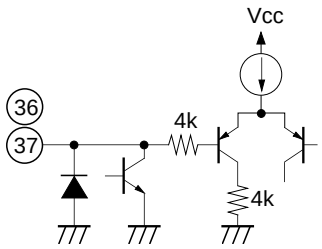	I²C BUS SCL (Serial Clock) and SDA (Serial Data). Vilmax = 1.5V Vihmin = 3V Volmax = 0.4V
38	V SYNC	3.5V	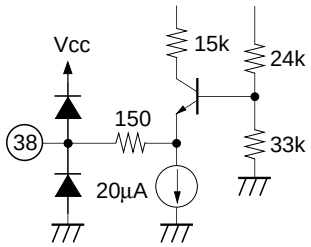	V sync separation input. Input a 2Vp-p video signal via a capacitor and resistor.
39	H SYNC	2.5V	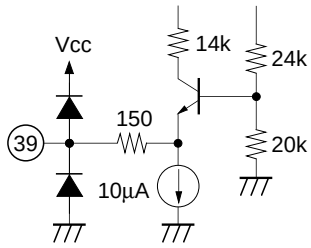	H sync separation input. Input a 2Vp-p video signal via a capacitor and resistor.
40	V HOLD	—	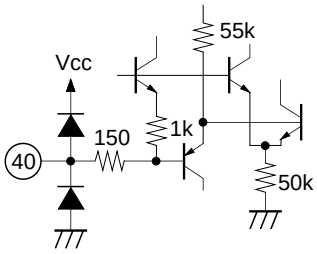	Peak hold for V sync separation. Connect a capacitor.

■ CXA2079Q (SIGNAL ASSY : IC2801)

• S2-Compatible 6-Input 2-Output Audio/Video Switch

● Block Diagram

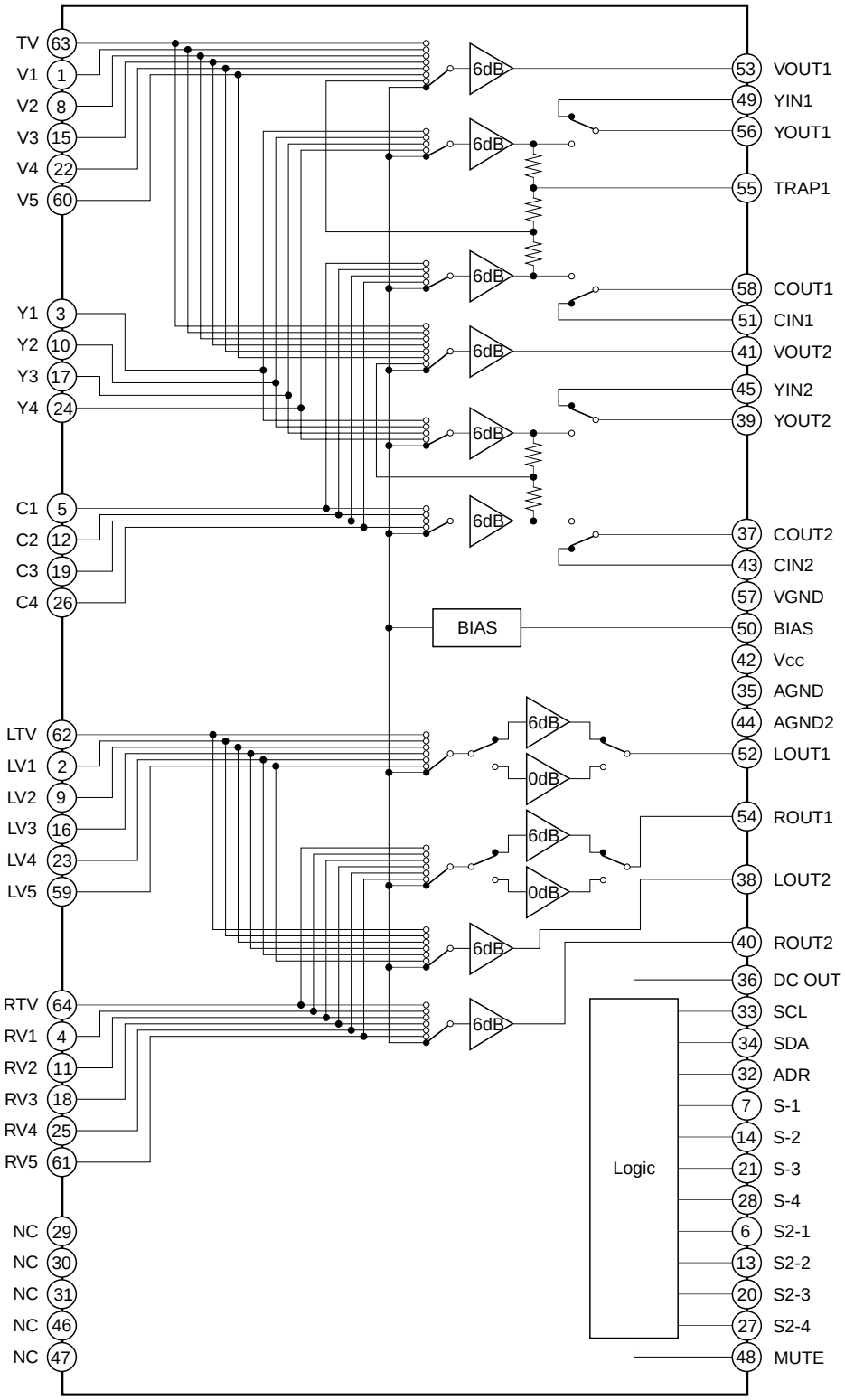

Audio system is attenuated by 6dB for 6kΩ resistor input, and a total gain is 0dB (LOUT1 and ROUT1 can be changed to –6dB).

● Pin Function

Pin No.	Symbol	Pin voltage	Equivalent circuit	Description
63 1 8 15 22 60	TV V1 V2 V3 V4 V5	4.0V	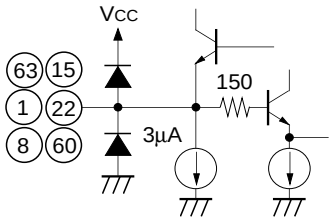	Video signal inputs. Input composite video signals.
3 10 17 24 49 45	Y1 Y2 Y3 Y4 YIN1 YIN2	4.0V	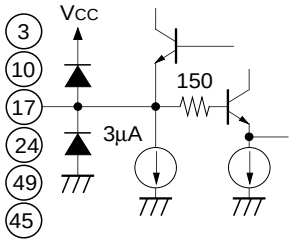	Y/C separation signal inputs. Input luminance signals. The YIN1 pin inputs the signal obtained by Y/C separating the VOUT1 pin output. The YIN2 pin inputs the signal obtained by Y/C separating the VOUT2 pin output.
5 12 19 26 51 43	C1 C2 C3 C4 CIN1 CIN2	4.5V	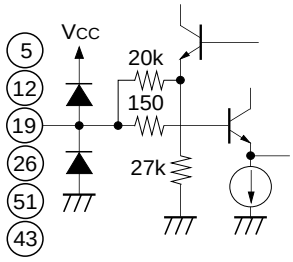	Y/C separation signal inputs. Input chrominance signals. The CIN1 pin inputs the signal obtained by Y/C separating the VOUT1 pin output. The CIN2 pin inputs the signal obtained by Y/C separating the VOUT2 pin output.
62 2 9 16 23 59 64 4 11 18 25 61	LTV LV1 LV2 LV3 LV4 LV5 RTV RV1 RV2 RV3 RV4 RV5	4.5V	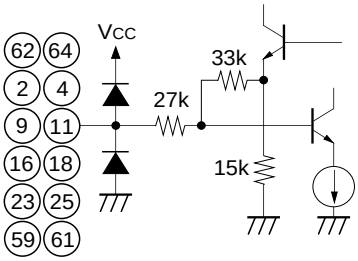	Audio signal inputs.
53 41	VOUT1 VOUT2	3.9V	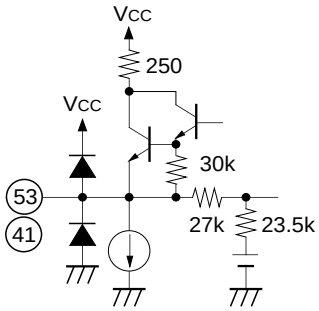	Video signal outputs. Output composite video signals.

Pin No.	Symbol	Pin voltage	Equivalent circuit	Description
56 39	YOUT1 YOUT2	3.3V	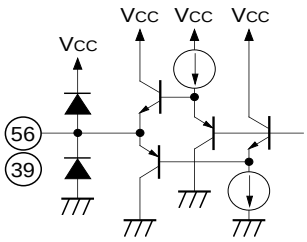	Video signal outputs. Output luminance signals.
58 37	COUT1 COUT2	4.5V	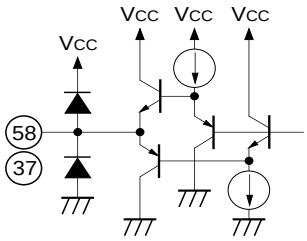	Video signal outputs. Output chrominance signals.
52 38 54 40	LOUT1 LOUT2 ROUT1 ROUT2	4.5V	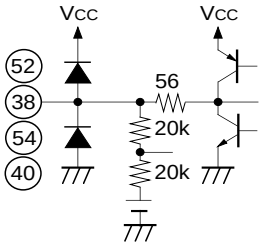	Audio signal outputs. Zo = 50Ω (within DC ± 2mA)
6 13 20 27	S2-1 S2-2 S2-3 S2-4	—	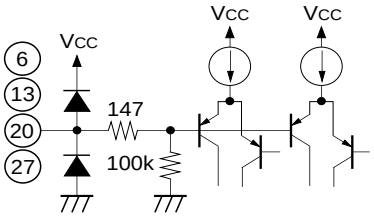	Detects the S2-compatible DC superimposed onto the C signal. 4:3 video signal at 1.3V or less 4:3 letter-box signal at 1.3V or more to 2.5V or less 16:9 picture squeezed signal at 2.5V or more These pins are pulled down to GND by a 100kΩ resistor, so the 4:3 video signals are selected when open.
7 14 21 28	S-1 S-2 S-3 S-4	—	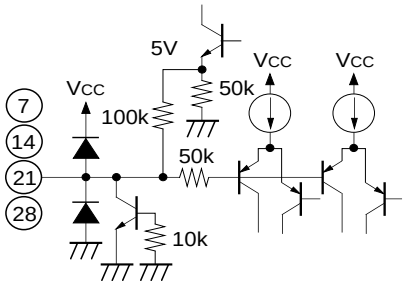	Composite video/S selector. The detection results are written to the status register. S signal at 3.5V or less Composite video signal at 3.5V or more These pins are pulled up to 5V by a 100kΩ resistor, so the composite video signals are selected when open.
32	ADR	—	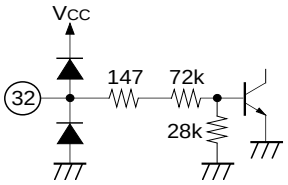	Selects the slave address for the I^2C bus. 90H at 1.5V or less 92H at 2.5V or more 90H when open

Pin No.	Symbol	Pin voltage	Equivalent circuit	Description
33	SCL	—	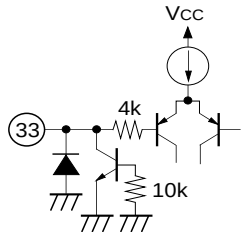	I²C bus signal input VILmax = 1.5V VIHmin = 3.0V
34	SDA	—	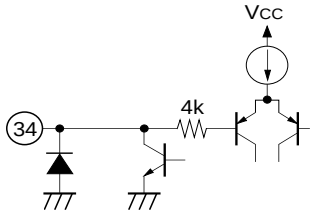	I²C bus signal input VILmax = 1.5V VIHmin = 3.0V VOLmax = 0.4V
36	DC OUT	—	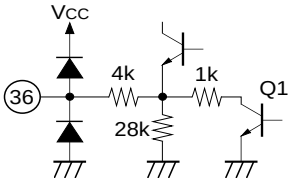	Outputs the S2-compatible DC superimposed onto the COUT2 output. The DC is superimposed by connecting this pin to the COUT2 output via a capacitor. Control is performed by the I²C bus. When 0V is output, Q1 is ON and the impedance is 5kΩ. S2 protocol output DC impedance of 10 ± 3kΩ is realized by attaching external resistance of 4.7kΩ. DC OUT (bus) Output DC 0 4.5V 1 0V 2 1.9V 3 4.5V
55	TRAP1	3.8V	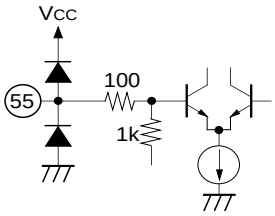	Connects trap circuit for subcarrier.
48	MUTE	—	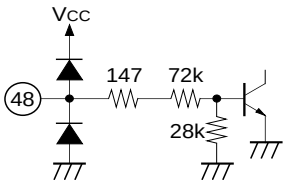	Audio signal output mute. Mute OFF at 1.5V or less Mute ON at 2.5V or more Mute OFF when open
50	BIAS	4.5V	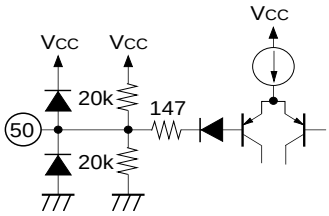	Internal reference bias (Vcc/2). Connects to GND via a capacitor.

■ LA4282 (POWER SUPPLY ASSY : IC901)

- **Audio IC**

● Block Diagram

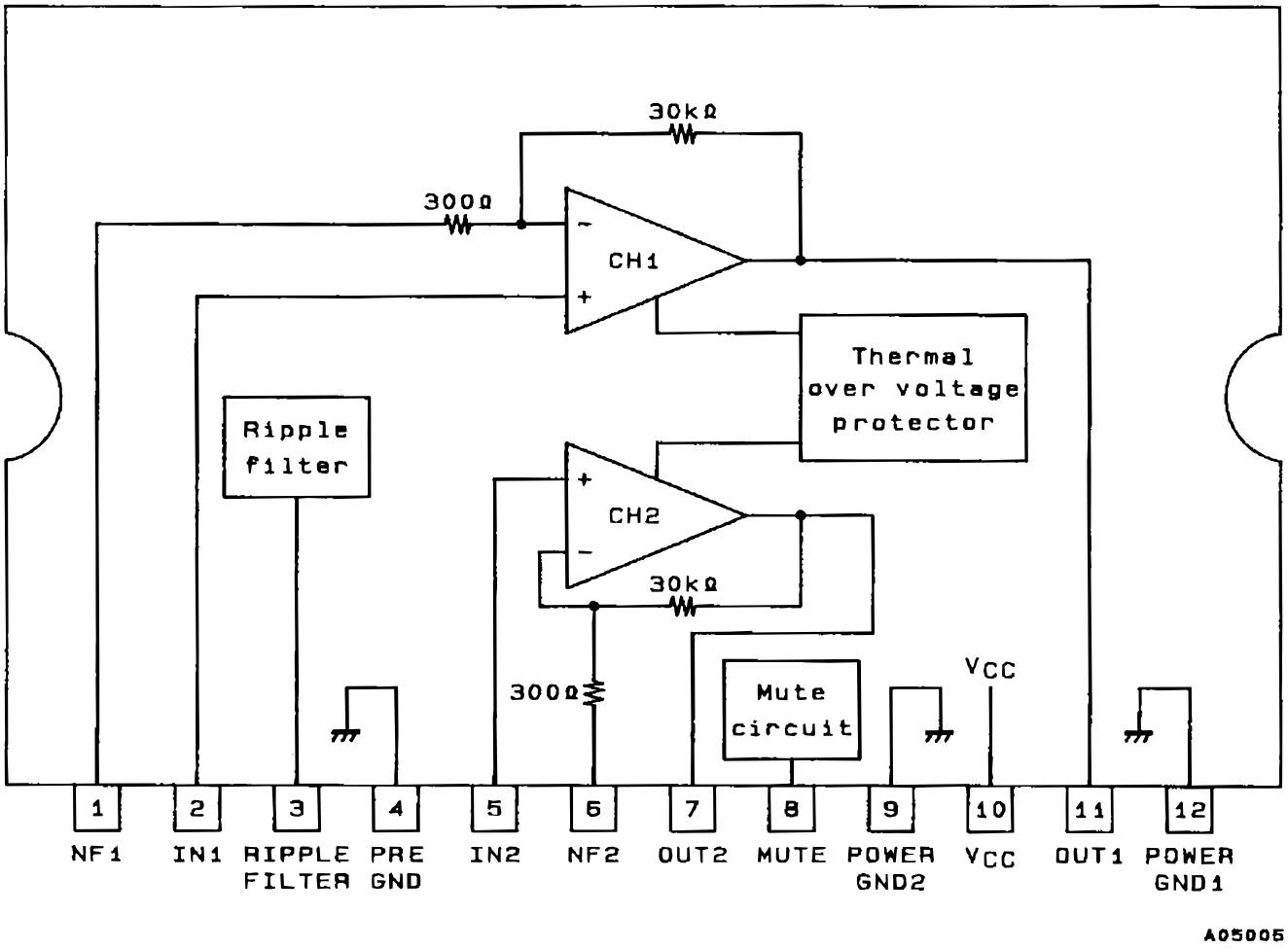

■ LA78045 (DEFLECTION SERVICE ASSY : IC802)

• Bus Supported TV Disply Vertical Output

● Block Diagram

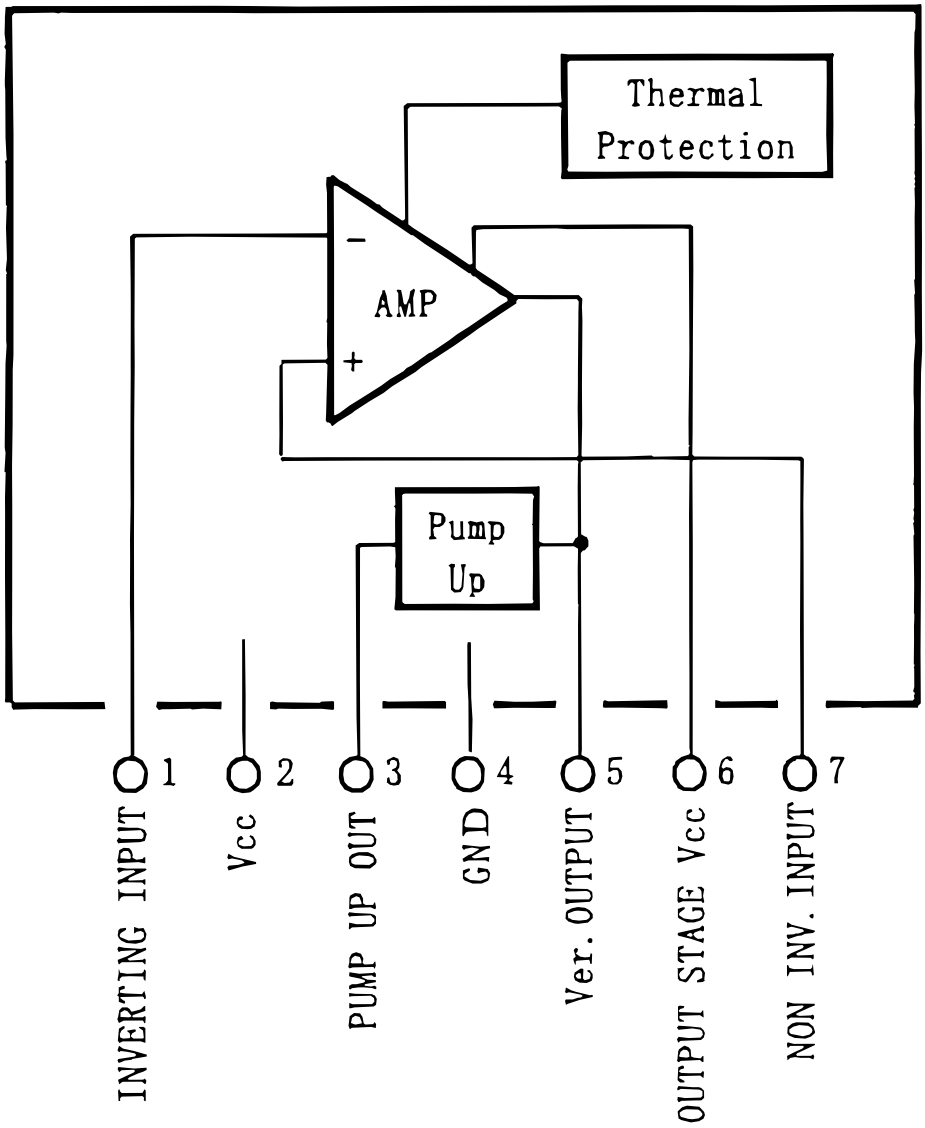

■ M52065FP (SIGNAL ASSY : IC2802)

• Analog Switch

● Block Diagram

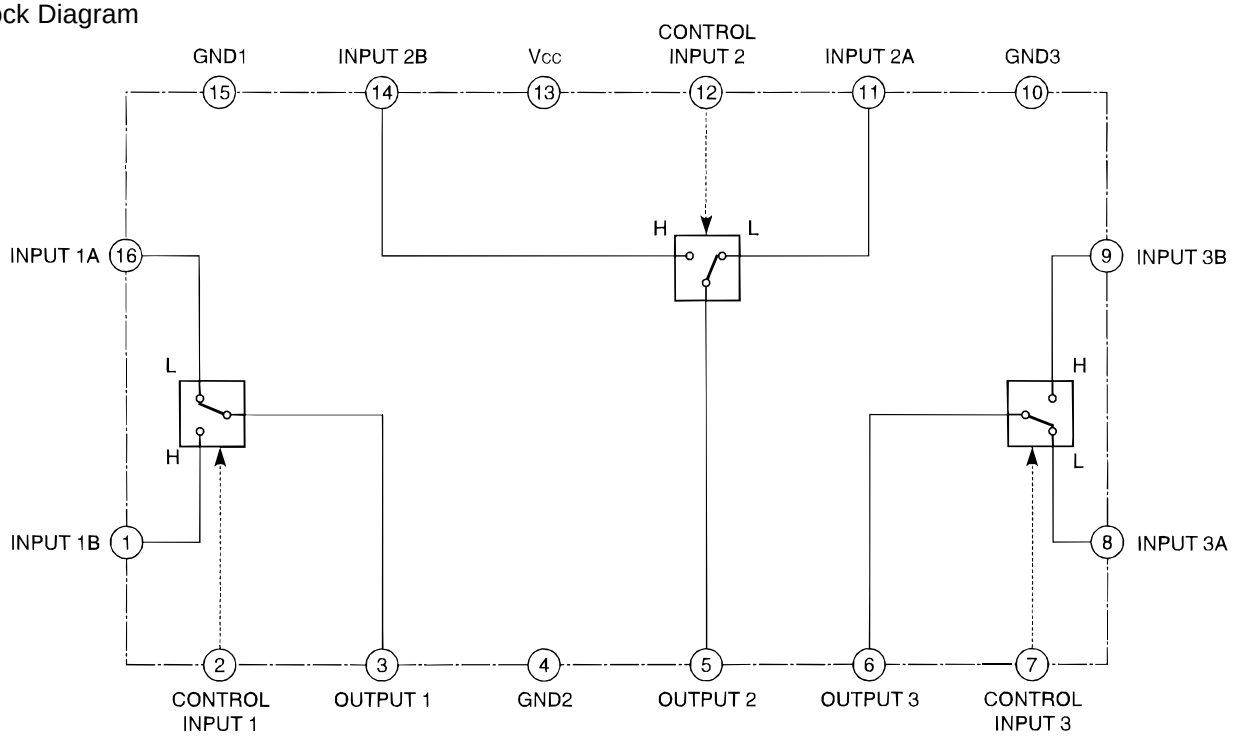

● Pin Function

1 8 9 11 14 16	INPUT	2.0	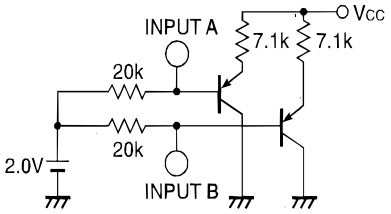	
3 5 6	OUTPUT	1.95	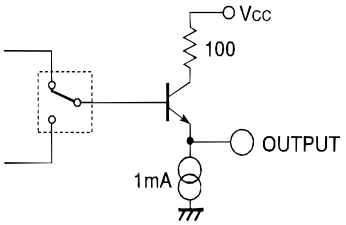	
2 7 12	CONTROL	–	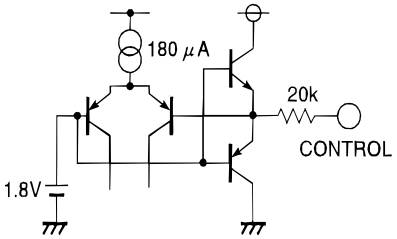	

■ M52347FP (SIGNAL ASSY : IC3901)

• Sync Signal Processor

● Block Diagram

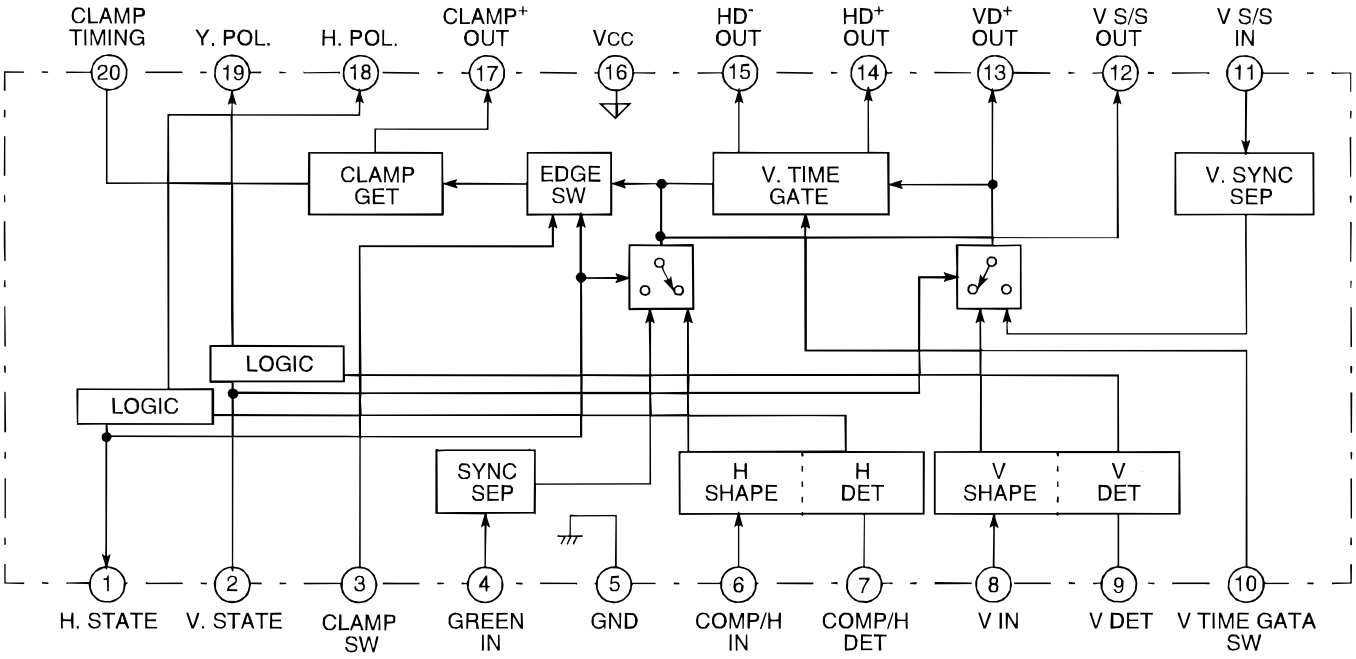

● Pin Function

Pin No.	Name	Pin voltage	Peripheral circuit of pins	Description of function
①	H.STATE	0 VDC or 5 VDC	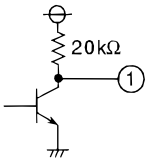	Logic output pin for horizontal synchronous signal When pin⑥input signal is POSI, outputs "H"; when NON, outputs "L"; and when NEG, outputs "H".
②	V.STATE	0 VDC or 5 VDC	Same as pin①	Logic output pin for vertical synchronous signal When pin⑧input signal is POSI, outputs "H"; when NON, outputs "L"; and when NEG, outputs "H".
③	CLAMP SW	≈2.2V when open	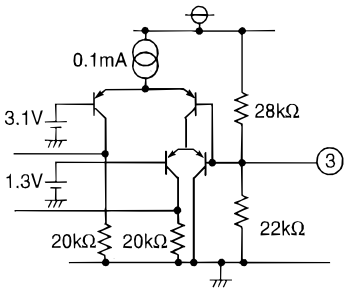	This SW is available to change the generating position of clamp pulse for input signal. (See Table 2.) VTH L =0 to1V VTH M =1.6 to 2.8V VTH H =3.4 to 5V
④	GREEN IN	≈2.8V when open	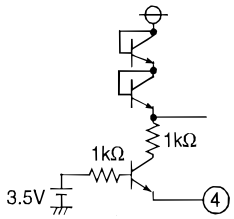	GREEN (SYNC ON VIDEO) input pin Input with negative sync. Comparison of pin④input signal and reference voltage within the IC performs synchronous separation.
⑤	GND			Grounding
⑥	COMP/H IN	≈2.5V when open	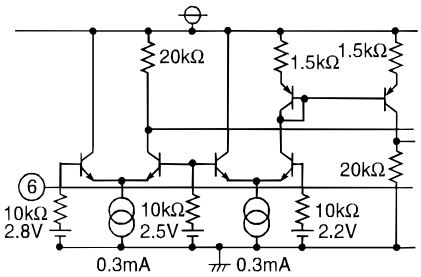	Composite sync/H sync input pin. Bias is approx. 2.5V and impedance is 10kΩ. The internal double threshold comparator is used for shaping waveform and detecting polarity. Optimum input amplitude is 0.6 Vp-p at pin⑥. Up to approx. 50% of duty, waveform shaping and polarity detection can be done.
⑦	COMP/H DET	≈2.5V when open (no signal)	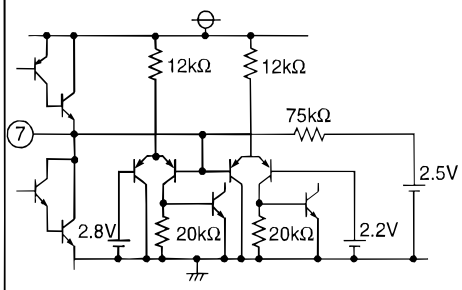	External capacitance is required as a filter pin for detecting polarity and detecting non-input. As the value is larger, the ripple is smaller and less malfunction occurs. However, this lowers the response speed of detection.
⑧	V IN	≈2.5V when open	Same as pin⑥	V sync input pin Same as pin⑥
⑨	V DET	≈2.5V when open (no signal)	Same as pin⑦	Same as pin⑦

Pin No.	Name	Pin voltage	Peripheral circuit of pins	Description of function
⑩	V.TEME GATE SW	≈3.2V when open	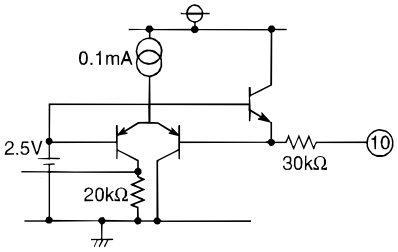	V TIME GATE SW pin Can select whether to output the pulse of VD portion from pin ⑭,⑮ output pluse. The threshold voltage is approx. 2.5V. VTH L=0 to 2V VTH H=3 to 5V
⑪	V S/S IN		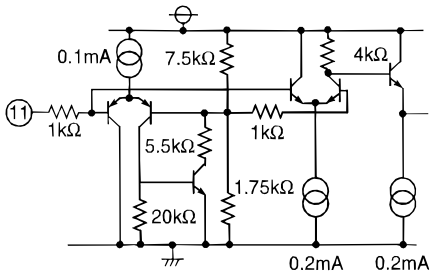	V S/S IN pin Inputs a signal of having externally integrated composite sync for V sync separation.
⑫	V S/S OUT		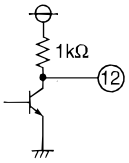	V S/S pulse output pin No problem occurs when current of approx. 6 mA flows to internal part of the IC. To improve the rising speed, connect a resistance between power supplies.
⑬	VD+OUT		Same as pin⑫	VD+ pulse output pin Same as pin ⑫
⑭	HD+OUT		Same as pin⑫	HD+ pulse output pin Same as pin ⑫
⑮	HD-OUT		Same as pin⑫	HD- pulse output pin Same as pin ⑫
⑯	VCC	5V		Power supply
⑰	CLAMP+ OUT		Same as pin⑫	CLAMP+ pulse output pin Same as pin ⑫
⑱	H.POL.	0 VDC or 5 VDC	Same as pin①	Logic output pin for horizontal synchronous signal When pin⑥input signal is POSI, outputs "L"; when NON, outputs "L"; and when NEG, outputs "H".
⑲	V.POL.	0 VDC or 5 VDC	Same as pin①	Logic output pin for vertical synchronous signal When pin⑧input signal is POSI, outputs "L"; when NON, outputs "L"; and when NEG, outputs "H".
⑳	CLAMP TIMING	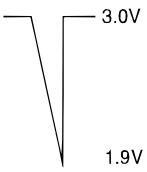	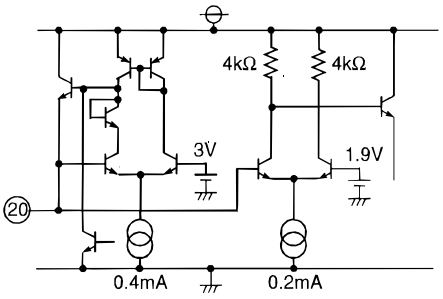	CLAMP TIMING pin The clamp pulse width is determined depending on the external resistance and capacitance. As the resistance value and capacitance value are larger, the clamp pulse width is wider.

■ NJM2283M (SIGNAL ASSY : IC2703, IC2804)

• 2 Input Video Switch

● Block Diagram

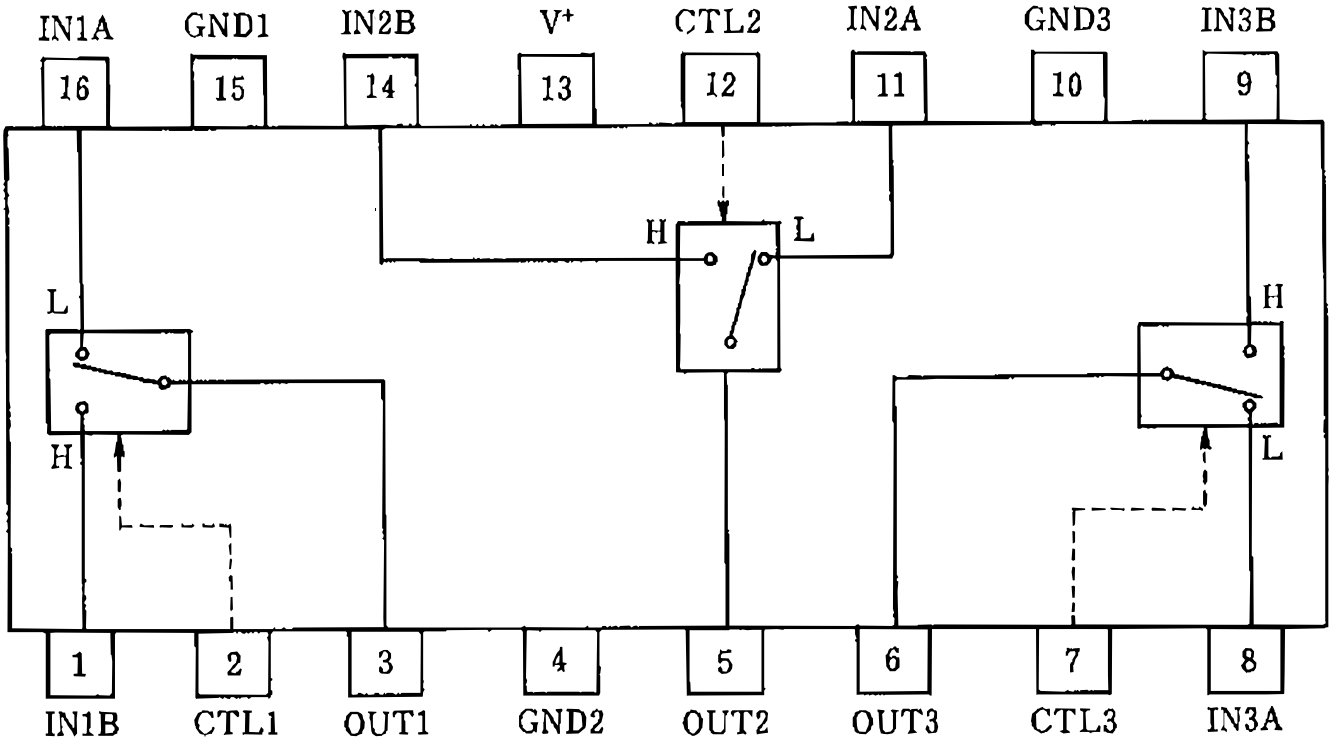

● Pin Function

16 1 11 14 8 9	IN 1 A IN 1 B IN 2 A IN 2 B IN 3 A IN 3 B	2.5V $\left(\frac{1}{2}V^{+}\right)$	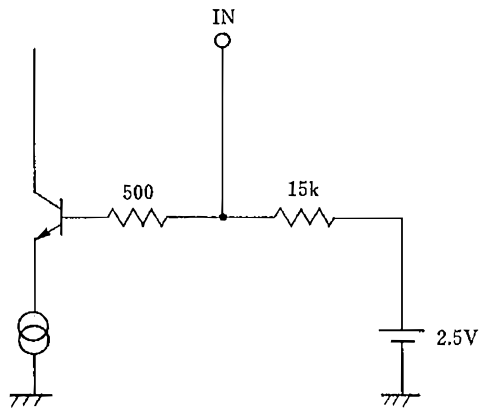
2 12 7	CTL 1 CTL 2 CTL 3		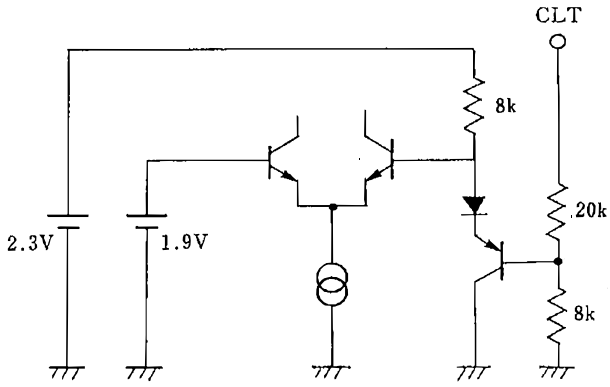
3 5 6	OUT 1 OUT 2 OUT 3	1.8 V $\left(\frac{1}{2}V^{+}-0.7\right)$	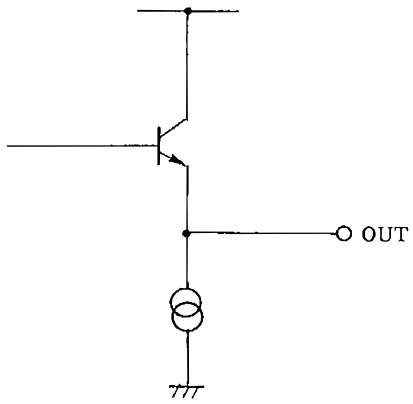
13	V^{+}	5 V	
15 4 10	GND 1 GND 2 GND 3		

■ PQ30RV11 (POWER SUPPLY ASSY : IC302)

• Low Power-Loss Voltage Regulators

● Block Diagram

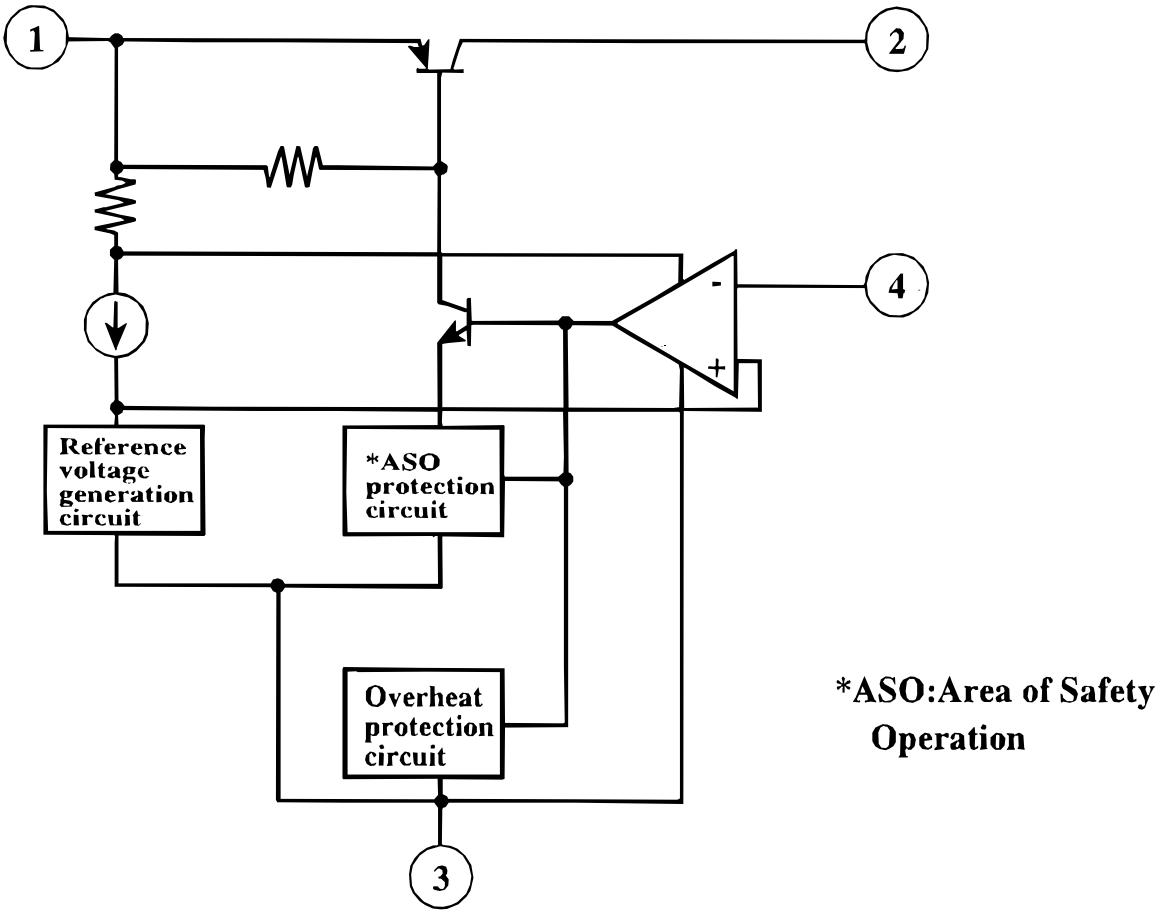

· Please refer to the chapter“ Handling Precautions ”.

■ SDA9280 (VIDEO IP SERVICE ASSY : IC3602)

• Disply Processor

● Block Diagram

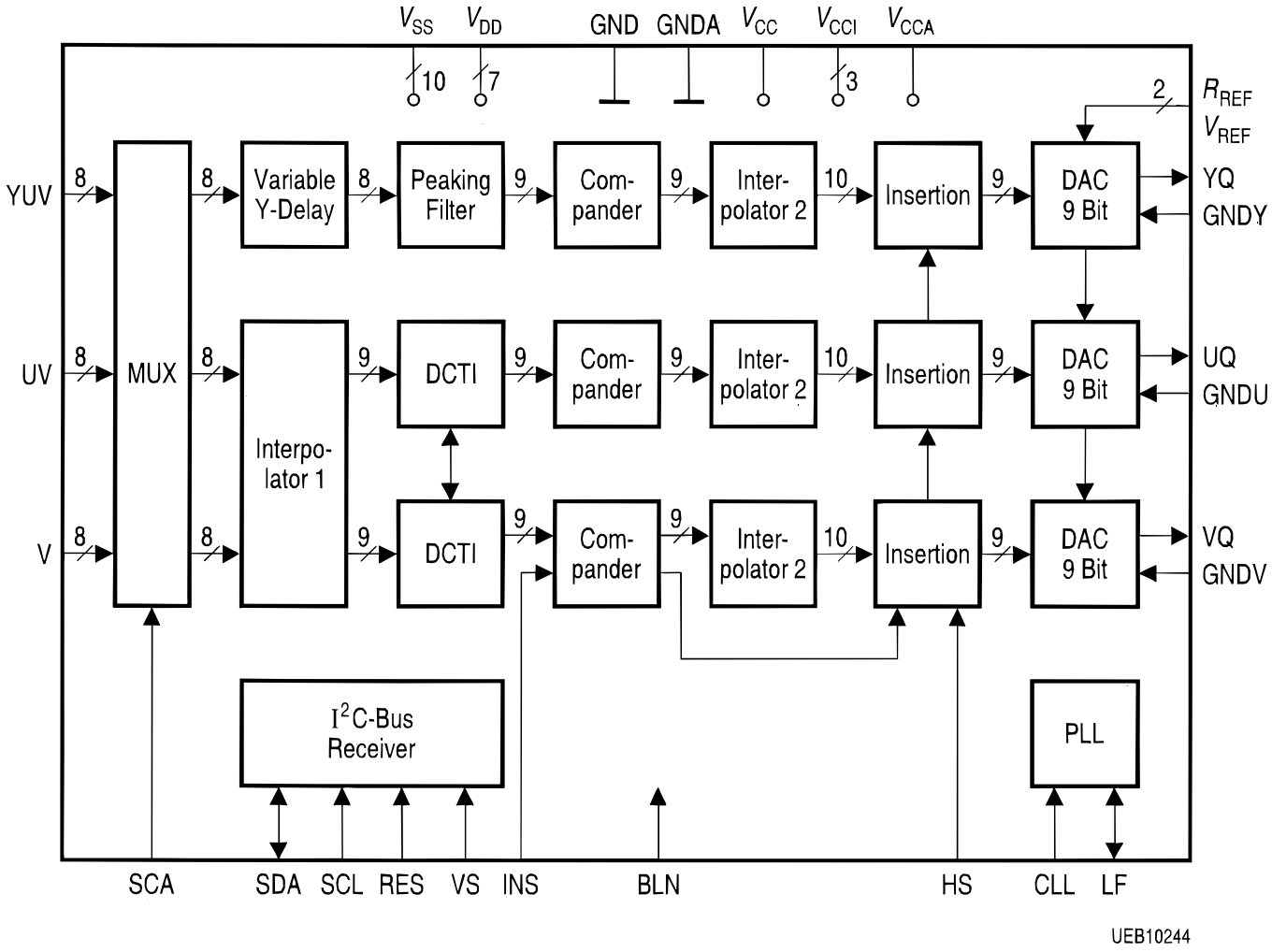

● Pin Function

Pin No.	Symbol	Type	Description
1,17,35	V_{SS}	S	Supply voltage (V_{SS}) for input stages
8,9,27,34,43, 60,63	V_{SS}	S	Supply voltage (V_{SS}) for digital parts and PLL ***Note**: no internal connection to pins No 1,17,35*
10,11,26,33, 42,61,62	V_{DD}	S	Supply voltage (V_{DD}) for digital parts, PLL and input stages ***Note**: internal connection to V_{CCI}, V_{CCA} (about 2 Ω)*
64 ... 68, 2 ... 4	V0 ... 7	I/TTL	Data input V (see Data Input Formats)
5,6,7,12 ... 16	UV0 ... 7	I/TTL	Data input UV (see Data Input Formats)
18 ... 25	YUV0 ... 7	I/TTL	Data input YUV (see Data Input Formats)
28	BLN	I/TTL	Blanking signal, high level indicates active video line
29	INS	I/TTL	Control signal for insertion of an arbitrary pattern (frame insertion)
30	SCA	I/TTL	Clock signal for data input
31	RES	I/TTL	Reset signal (active low) for I^2C Bus
32	SCL	I	I^2C-Bus clock line
36	SDA	IQ	I^2C-Bus data line
37	TEST		Don't connect
38	VS	I/TTL	Vertical synchronization signal for synchronizing I^2C Bus (active: HIGH)
39	CLL	I/TTL	System clock
40	HS	I/TTL	Control signal for black level insertion (line frequency)
41	TEST		Connect to VSS
44	LF		PLL-filter connection
45,48,52	V_{CCI}	S	Analog supply voltage for DACs internally connected to V_{DD}, V_{CCA} (about 2 Ω)
46	GNDY	S	Return path for YQ
47	YQ	Q/ana	Analog output: luminance signal Y
49	V_{CCA}	S	Analog supply voltage internally connected to V_{DD}, V_{CCI} (about 2 Ω)
50	GNDV	S	Return path for VQ

Pin No.	Symbol	Type	Description
51	VQ	Q/ana	Analog output: chrominance signal -(R-Y)
53	GNDU	S	Return path for UQ
54	UQ	Q/ana	Analog output: chrominance signal -(B-Y)
55	GNDA	S	Analog supply voltage
56	V_{REF}	I/ana	Analog reference voltage for DACs
57	R_{REF}		Reference resistor for DACs
58	V_{CC}	S	Analog supply voltage
59	GND	S	Analog supply voltage

S: supply, I: input, Q: output, TTL: digital (TTL)

■ TA1316AN (VIDEO IP SERVICE ASSY : IC1902)

• YCbCr/YPbPr Signal and Sync Processor for Digital TV, Progressive Scan TV and Duble Scan.

● Block Diagram

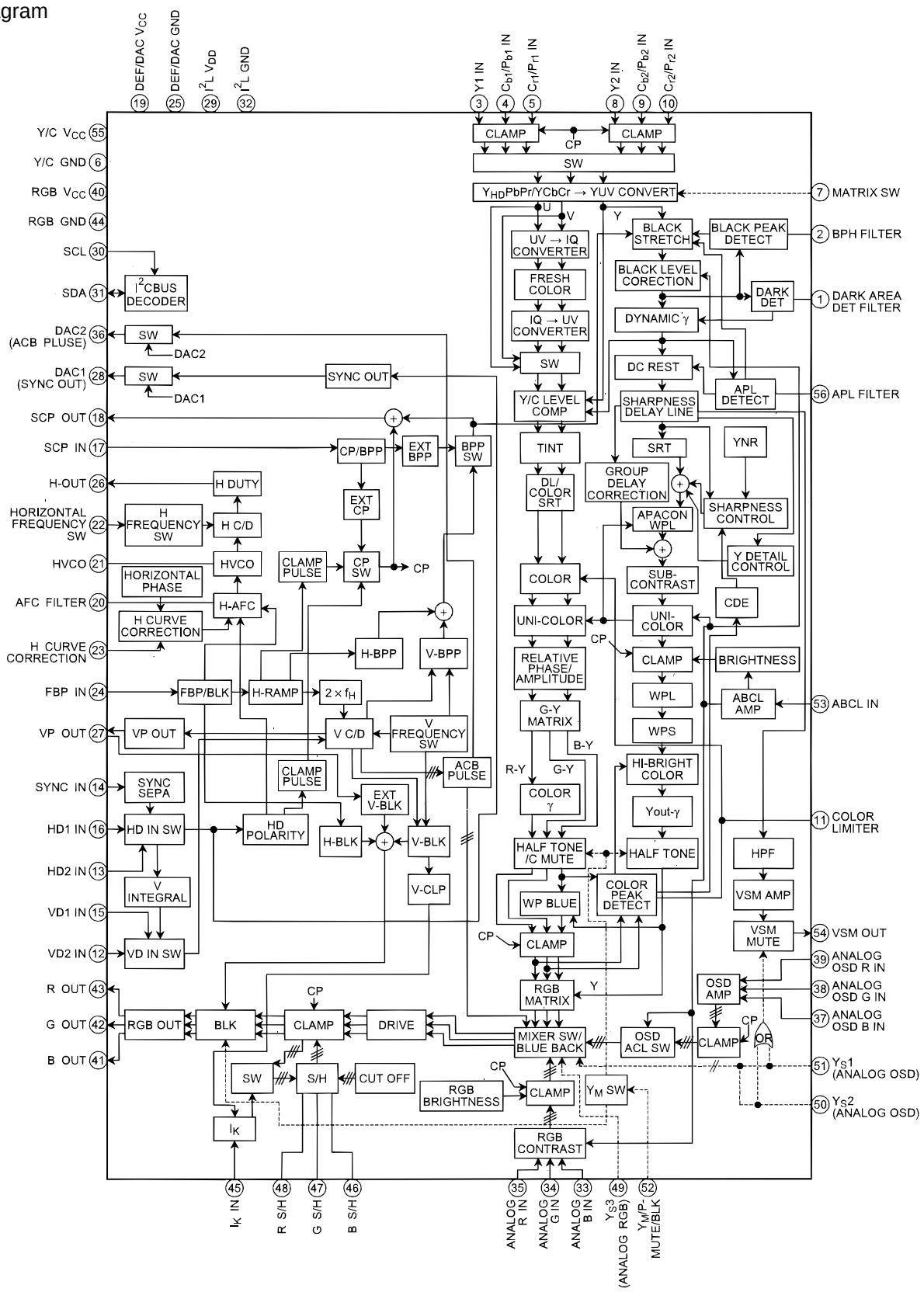

● Pin Function

Pin No.	Pin Name	Function	Interface Circuit	Input Signal/Output Signal
1	DARK AREA DET FILTER	Connect filter for detecting black area. Voltage value of this pin controls dynamic γ circuit gain.	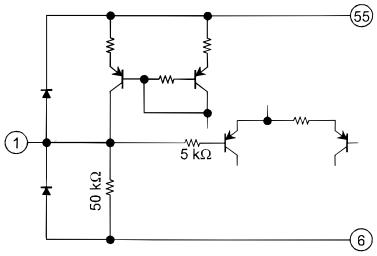	DC
2	BPH FILTER	Connect filter for detecting black peak. Voltage value of this pin controls black stretch gain.	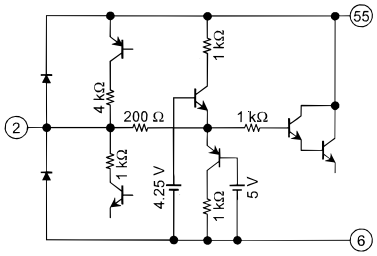	DC

Pin No.	Pin Name	Function	Interface Circuit	Input Signal/Output Signal
3	Y1 IN	Inputs Y1 signal via clamp capacitor. Recommended input amplitude: 1 V_{p-p} (including sync) at 100% color bar.	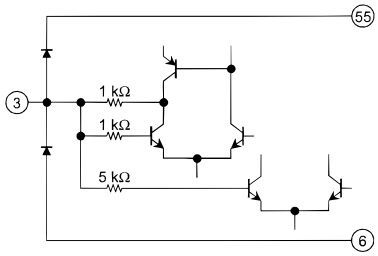	1 V_{p-p} (including sync) at 100% color bar 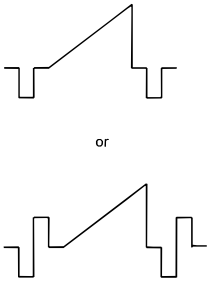
4	C_{b1}/P_{b1} IN	Inputs C_{b1}/P_{b1} signal via clamp capacitor. Recommended input amplitude: 700 mV_{p-p} at 100% color bar.	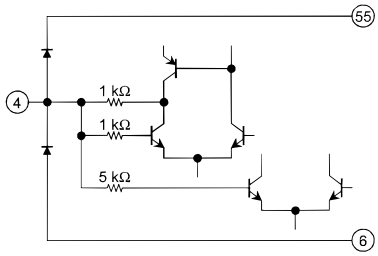	700 mV_{p-p} at 100% color bar for C_{b1}/P_{b1}

Pin No.	Pin Name	Function	Interface Circuit	Input Signal/Output Signal
5	C_{r1}/P_{r1} IN	Inputs C_{r1}/P_{r1} signal via clamp capacitor. Recommended input amplitude: 700 mV_{p-p} at 100% color bar.	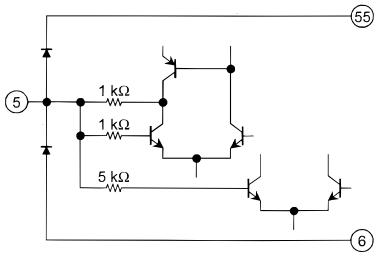	100 mV_{p-p} at 100% color bar for C_{r1}/P_{r1}
6	Y/C GND	GND pin for Y/C block.	—	—
7	MATRIX SW	Matrix switching pin for YCbCr or YPbPr input. Switches matrix according to voltage value input to this pin. Control by pin has priority over control by BUS. When pin is not used, connect 0.01 µF capacitor between pin and GND.	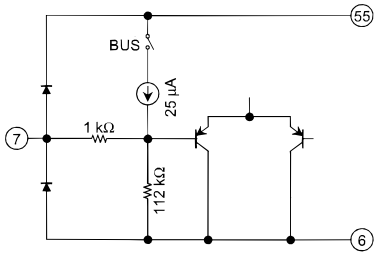	0~1.3 V: YCbCr → YUV 1.7~5 V: YPbPr → YUV Open: BUS control

Pin No.	Pin Name	Function	Interface Circuit	Input Signal/Output Signal
8	Y2 IN	Inputs Y2 signal via clamp capacitor. Recommended input amplitude: 1 V_{p-p} (including sync) at 100% color bar.	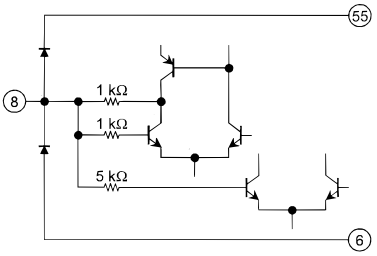	1 V_{p-p} (including sync) at 100% color bar 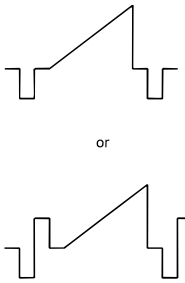
9	Cb2/Pb2 IN	Inputs C_{b2}/P_{b2} signal via clamp capacitor. Recommended input amplitude: 700 mV_{p-p} at 100% color bar.	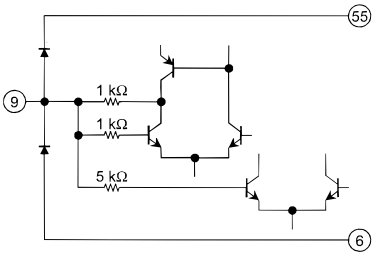	700 mV_{p-p} at 100% color bar for C_{b2}/P_{b2}

Pin No.	Pin Name	Function	Interface Circuit	Input Signal/Output Signal
10	C_{r2}/P_{r2} IN	Inputs C_{r2}/P_{r2} signal via clamp capacitor. Recommended input amplitude: 700 mV_{p-p} at 100% color bar.	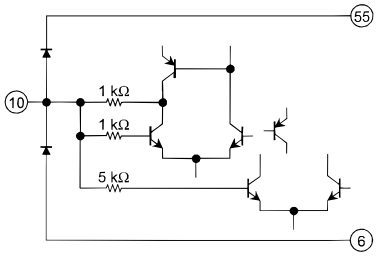	700 mV_{p-p} at 100% color bar for C_{r2}/P_{r2}
11	COLOR LIMITER	Connect filter for detecting color limit.	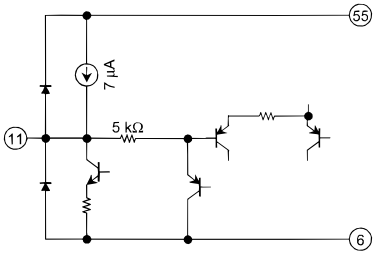	DC

Pin No.	Pin Name	Function	Interface Circuit	Input Signal/Output Signal
12	VD2 IN	Inputs vertical sync signal VD2. Signal input can have both positive and negative polarity.	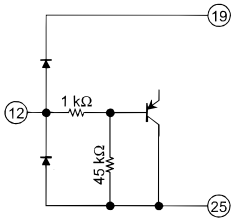	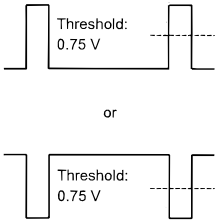
13	HD2 IN	Inputs horizontal sync signal HD2. Signal input can have both positive and negative polarity.	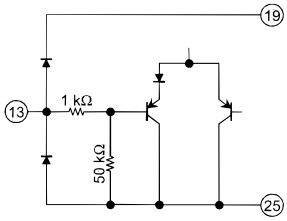	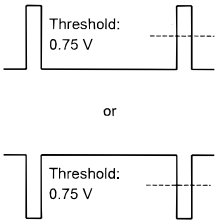

Pin No.	Pin Name	Function	Interface Circuit	Input Signal/Output Signal
14	SYNC IN	Inputs sync signal via clamp capacitor.	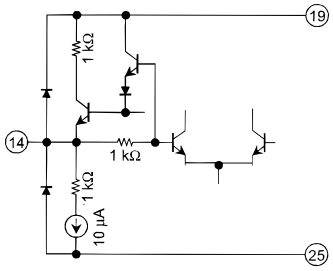	White 100%: 1 V_{p-p} 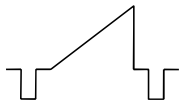 or 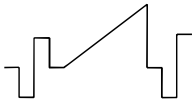
15	VD1 IN	Inputs vertical sync signal VD1. Signal input can have both positive and negative polarity.	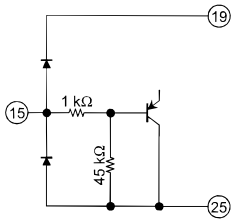	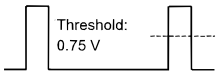 or 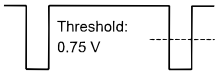

Pin No.	Pin Name	Function	Interface Circuit	Input Signal/Output Signal
16	HD1 IN	Inputs horizontal sync signal HD1. Input signal can have both positive and negative polarity.	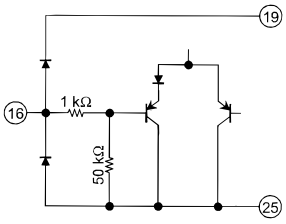	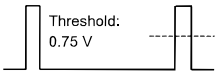 or 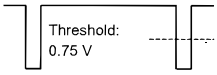
17	SCP IN	Inputs SCP from up converter. Input signals are clamp pulse (CP) and black peak detection stop pulse (BPP).	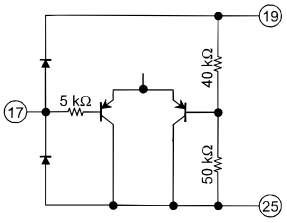	1.7 V~3.3 V: BPP 3.7 V~9 V: CP
18	SCP OUT	Outputs SCP. Output signals are clamp pulse (CP) and black peak detection stop pulse (BPP).	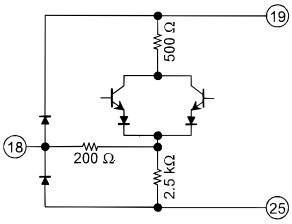	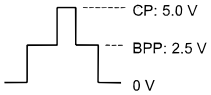

Pin No.	Pin Name	Function	Interface Circuit	Input Signal/Output Signal
19	DEF/DAC V_{CC}	V_{CC} pin for DEF/DAC block. To ascertain the correct voltage for V_{CC}, please refer to the table entitled Maximum Ratings.	—	—
20	AFC FILTER	Connect filter for detecting AFC.	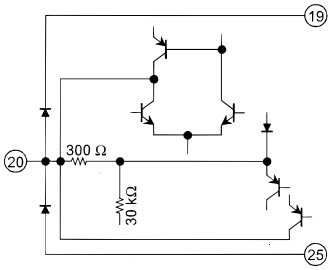	DC
21	HVCO	Connect ceramic oscillator for horizontal oscillation. Use Murata CSB503F30 oscillator.	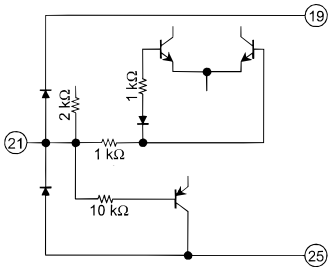	—

Pin No.	Pin Name	Function	Interface Circuit	Input Signal/Output Signal
22	HORIZONTAL FREQUENCY SW	Horizontal frequency select pin. Selects horizontal frequency according to voltage value input to this pin. When selecting horizontal frequency by BUS control, leave pin open. Control by pin has priority over control by BUS.	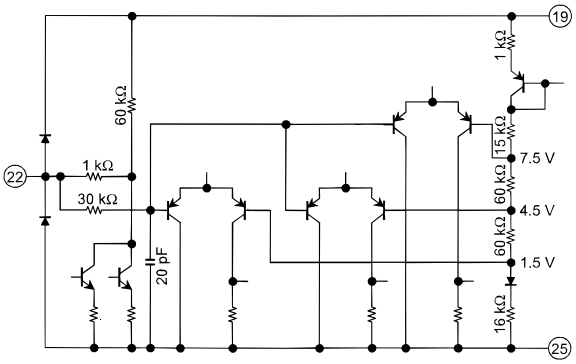	At BUS control (horizontal frequency): output voltage value 00 (15.75 kHz): DC 9 V 01 (31.5 kHz): DC 6 V 10 (33.75 kHz): DC 3 V 11 (45 kHz): DC 0 V At pin 22 control, horizontal frequency and input voltage value 0~1.0 V: 45 kHz 2.0~4.0 V: 33.75 kHz 5.0~7.0 V: 31.5 kHz 8.0~9.0 V: 15.75 kHz
23	H CURVE CORRECTION	Corrects curve at high-tension fluctuation. Input AC component of high-tension fluctuation. When pin is not used, connect 0.01 μF capacitor between pin and GND.	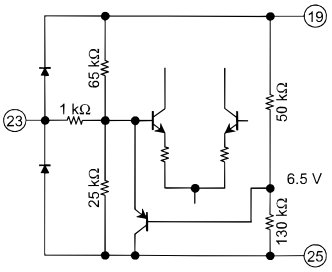	DC

Pin No.	Pin Name	Function	Interface Circuit	Input Signal/Output Signal
24	FBP IN	Input FBP and H-BLK for horizontal AFC.	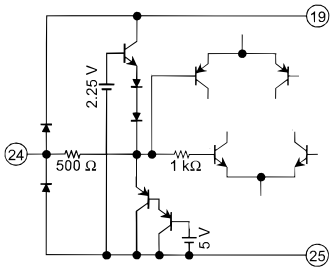	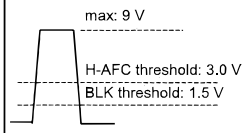
25	DEF/DAC GND	GND pin for DEF/DAC block.	—	—
26	H-OUT	Horizontal output pin. Open collector output.	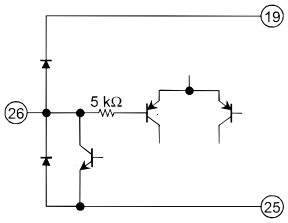	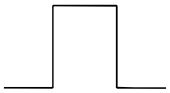

Pin No.	Pin Name	Function	Interface Circuit	Input Signal/Output Signal
27	VP OUT	Outputs vertical pulse. When a current of 500 μA or more is applied to the pin, external blanking is carried out by ORing this signal with the internal blanking signal.	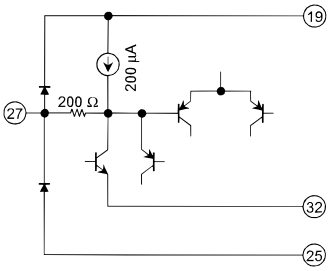	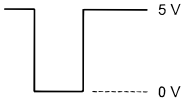
28	DAC1 (SYNC OUT)	Outputs 1-bit DAC or composite SYNC signal after sync separation. Open-collector output (The output level for this pin cannot be guaranteed since leakage from internal signals may occur.)	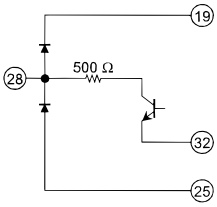	DC or SYNC OUT 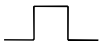
29	I^2L V_{DD}	V_{DD} pin for I^2L block. Connect 2 V (typ.).	—	—

Pin No.	Pin Name	Function	Interface Circuit	Input Signal/Output Signal
30	SCL	SCL pin for I^2C BUS.	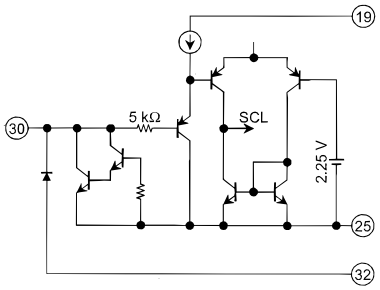	—
31	SDA	SDA pin for I^2C BUS.	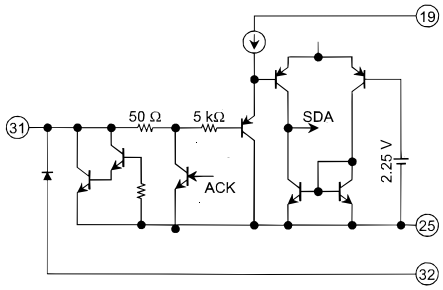	—
32	I^2L GND	GND pin for I^2L block.	—	—

Pin No.	Pin Name	Function	Interface Circuit	Input Signal/Output Signal
33 34 35	ANALOG B IN ANALOG G IN ANALOG R IN	Inputs analog R/G/B signal via clamp capacitor. Recommended input amplitude: 0.7 V_{p-p} (no sync) at 100% white	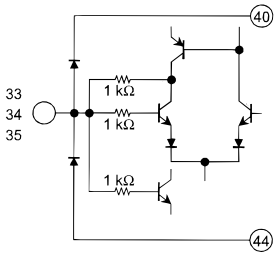	100 IRE: 0.7 V_{p-p}
36	DAC2 (ACB pulse)	Outputs 1-bit DAC or ACB pulse Open-collector output	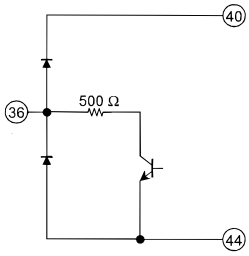	DC or ACB pulse 

Pin No.	Pin Name	Function	Interface Circuit	Input Signal/Output Signal
37 38 39	ANALOG OSD B IN ANALOG OSD G IN ANALOG OSD R IN	Inputs analog OSD signal via clamp capacitor. Recommended input amplitude: 0.7 V_{p-p} (no sync) at 100% white	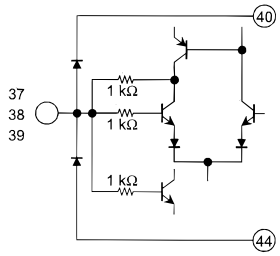	100 IRE: 0.7 V_{p-p}
40	RGB V_{CC}	V_{CC} pin for text/RGB block. To ascertain the correct voltage for V_{CC}, please refer to the table entitled Maximum Ratings:	—	—
41 42 43	B OUT G OUT R OUT	Outputs R/G/B signal. Recommended output amplitude: 100 IRE = 2.3 V_{p-p}	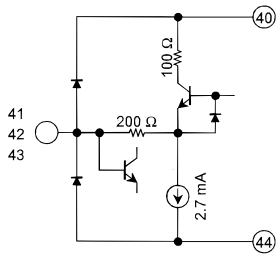	100 IRE: 2.3 V_{p-p} Conditions: UNI-COLOR = max SUB-CONT = Cent Y IN = 0.7 V_{p-p}
44	RGB GND	GND pin for text/RGB block.	—	—

Pin No.	Pin Name	Function	Interface Circuit	Input Signal/Output Signal
45	I_K IN	Inputs the feedback signal from CRT. (BLK level should be 0 V to 3 V.) When ACB is not used, connect this pin to the RGB V_{CC} pin.	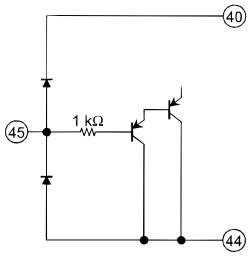	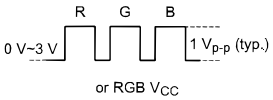
46 47 48	B S/H G S/H R S/H	Sample-and-hold (S/H) pin. In ACB mode connect a 2.2-µF capacitor. In CUTOFF mode connect a 0.01-µF capacitor.	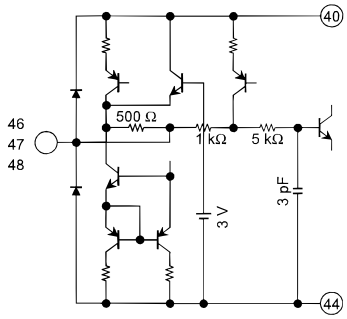	DC

Pin No.	Pin Name	Function	Interface Circuit	Input Signal/Output Signal
49	Y_S3 (analog RGB)	Selects input between internal RGB and external analog RGB according to voltage value input to this pin. When analog RGB is selected, mutes VSM output.	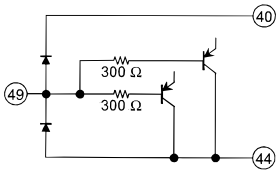	0~0.5 V: Internal 0.9~5 V: Analog RGB, VSM mute
50 51	Y_S2 (analog OSD) Y_S1 (analog OSD)	Switches between internal RGB and OSD input signals. Voltage applied to Y_S1 and Y_S2 adjusts blend ratio of internal RGB and OSD signals. When Y_S1 or Y_S2 is High, mutes VSM output. Y_S2 / Y_S1 / Blend ratio Int RGB: OSD RGB L / L / 10:0 H / L / 7:3 L / H / 5:5 H / H / 0:10	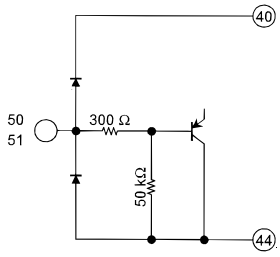	0~0.5 V: Internal 0.9~2.1 V: VSM mute 2.4~5 V: OSD, VSM mute

Pin No.	Pin Name	Function	Interface Circuit	Input Signal/Output Signal
52	Y_M/P-MUTE/BLK	Fast half-tone switch for internal RGB signal. Also performs image mute or blanking.	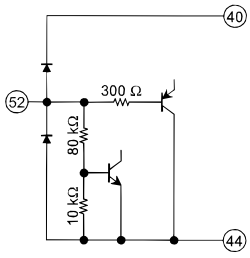	0~0.5 V: Internal 0.9~2.1 V: Half-tone 2.4~5.8 V: P-mute 6.2~9 V: Blanking
53	ABCL IN	ABL and ACL input pin. Can set gain and start point for ABL and dynamic ABL by BUS control.	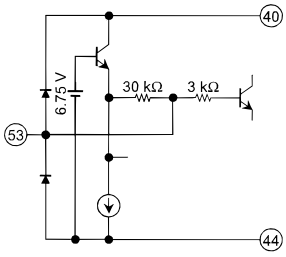	DC

Pin No.	Pin Name	Function	Interface Circuit	Input Signal/Output Signal
54	VSM OUT	Outputs Y signal for VSM which passes through HPF circuit (primary differential circuit). Mutes output signal using pins 49, 50 and 51.	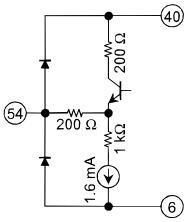	—
55	Y/C V_{CC}	V_{CC} pin for Y/C block. To ascertain the correct voltage for V_{CC}, please refer to the table entitled Maximum Ratings.	—	—
56	APL FILTER	Connect filter for correcting DC restoration. Leaving this pin open enables user to monitor Y signal after black stretch and dynamic γ.	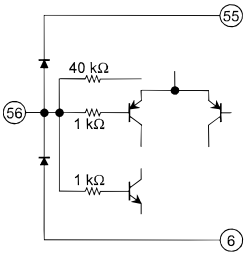	—

■ TC74HC126AF (VIDEO IP SERVICE ASSY : IC3205)

• Quad Bus Buffer

● Pin Arrangement

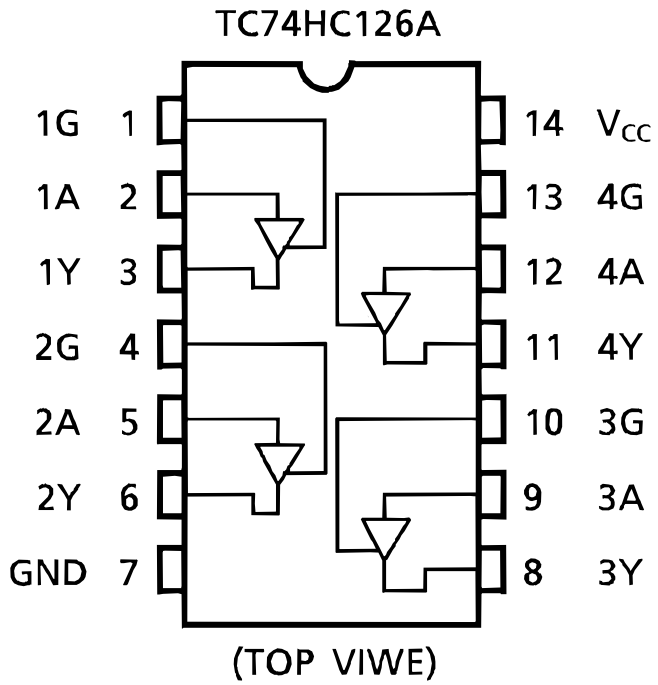

■ PD5688A9 (SIGNAL ASSY : IC2302)

• MAIN U-COM

● Pin Function

No.	Mark	Pin Name	I/O	Description
1	HSYNC	-	I	-
2	VSYNC	VDRV	I	Vsync input for V interruption processing
3	P40/AD4	KEY	I	The analog DC voltage input for KEY input distinction
4	P41/INT2	ST1	I	For sound multiplex control (MTS information)
5	P42/TIM2	HSYNC1	I	horizontal sync count input for tuner 1 reception
6	P43/TIM3	HSYNC2	I	horizontal sync count input for tuner 2 reception
7	P24/AD3	AFT2	I/O	The AFT analog voltage input for tuners 2
8	P25/AD2	AFT1	I/O	The AFT analog voltage input for tuners 1
9	P26/AD1	RLS	I/O	DC input for ROOM LIGHT SENSOR
10	P27	FMONO	I/O	For sound multiplex control (MTS change)
11	P00/PWM4	MPX	I/O	For sound multiplex control (MTS change)
12	P01/PWM5	SCL2	I/O	CXA2079 (AV I/O), uPD64082 (3DY/C), TA1270 (main color demodulation), SCL output for CXA2019 (sub color demodulation)
13	P02/PWM6	SDA2	I/O	CXA2079 (AV I/O), uPD64082 (3DY/C), TA1270 (main color demodulation), SDA output for CXA2019 (sub color demodulation)
14	P17/SIN	ANTSW	I/O	The output for ANT SW change
15	P44/INT1	REM	I	SR remote control signal input
16	P45/SOUT	SAP1	I/O	For sound multiplex control (MTS information)
17	P46/SCLK	DET	I/O	The input for electric discharge detection
18	AVCC	AVCC	-	The power supply for analogs. Connect with +5V

No.	Mark	Pin Name	I/O	Description
19	HLF	HLF	-	The external parts for CCD timing signal generating circuits are connected
20	RVCO	RVCO	-	The external parts for CCD timing signal generating circuits are connected
21	VHOLD	VHOLD	-	The external parts for CCD standard voltage generating circuits are connected.
22	CVIN	SCCY	I	The picture signal input for sub screen V CHIP detection (2.0Vpp)
23	CNVSS	CNVSS	-	GND
24	XIN	XIN	I	The input terminal of a main clock generating circuit
25	XOUT	XOUT	O	The output terminal of a main clock generating circuit
26	VSS	VSS	-	GND
27	VCC	VCC	-	STB5V
28	P63/OSC1/XCIN	ACCLK	I	The AC.CLK detection input for AC power supply OFF detection
29	P64/OSC2/XCOUT	NC	I/O	-
30	RESET	RESET	I	RESET input
31	P31	RELAY	I/O	Power supply relay control
32	P30	MONMUTE	I/O	A monitor out signal, the signal output for mute (at the time of a function change and power supply ON /OFF)
33	P03	SMUTE	I/O	MUTE for sub screens
34	P16/I2/INT3	SBUSY	I/O	The BUSY signal for communication between sub microcomputers
35	P15	EEPRST	I/O	RESET output for EEPROM
36	P14/SDA2	ESDA	I/O	SDA signal for EEP ROM communication
37	P13/SCL2	SDA1	I/O	TUNER 1 and 2, TA1316 (jungle) and CM0010 (multi-screen), SDA output for BD3867 (audio) control
38	P12/SCL2	ESCL	I/O	SCL signal for EEP ROM communication
39	P11/SCL1	SCL1	I/O	TUNER 1 and 2, TA1316 (jungle) and CM0010 (multi-screen), SCL output for BD3867 (audio) control
40	P10/OUT2	VMUTE	I/O	Image mute output (a main screen and sub screen is mute)
41	P23	AMUTE	I/O	Audio mute output
42	P22	CMUTE	I/O	Convergence mute output
43	P21	GENB	I/O	ENB output for HG62G010R29FB (auto zoom IC) control
44	P20	GRST	I/O	RESET output for HG62G010R29FB (auto zoom IC) control
45	P07/PWM3	GDATA	I/O	HG62G010R29FB (auto zoom IC) and DATA output for control
46	P06/PWM2	GCLK	I/O	HG62G010R29FB (auto zoom IC) and CLK output for control
47	P05/PWM1	SSDA	I/O	SDA signal for the communication between sub microcomputers
48	P04/PWM0	SSCL	I/O	SCL signal for the communication between sub microcomputers
49	P55/OUT1	RST	O	Three dimensional YC, the reset signal output for multi-screens
50	P54/B	PASS	O	Two screen ON / OFF
51	P53/G	STDSW	O	VCR non-standard signal detection (for AFC filter change)
52	P52/R	(TUSW)	O	It is an object for a frequency characteristic change at the time of a television function.

■ PD5689A9 (VIDEO IP SERVICE ASSY : IC1401)

• SUB U-COM

● Pin Function

No.	Mark	Pin Name	I/O	Description
1	HSYNC	DHBLK	I	Synchronizing signal for CCD display
2	VSYNC	VDRV	I	Synchronizing signal for CCD display Vsync input
3	P40/AD4	COPT	I	The option port for EEPROM existence change for convergence examination
4	P41/INT2	VS	I	The vertical synchronization input for fH detection of a component signal
5	P42/TIM2	HS	I	The horizontal synchronization input for fH detection of a component signal
6	P43/TIME3	SYNCDET	I	The signal input for RGB input separation SYNC distinction
7	P24/AD3	HOSCSW	I/O	horizontal free run frequency change
8	P25/AD2	MCOMPSW	I/O	Main composite (S) / component change signal
9	P26/AD1	SCOMPSW	I/O	Sub composite (S) / component change signal
10	P27/AD5	COMPOX2	I/O	Component signal detection for sub screens
11	P00/PWM4	SESCL	I/O	SCL output for EEP ROM for convergence examination
12	P50/PWM7	HSIZEADJ	O	PWM output for horizonatal size adjustment
13	P01/PWM5	SESDA	I/O	SDA output for EEP ROM for convergence examination
14	P47	MODE1	O	The signal for PINKEY change 1
15	P02/PWM6	VSIZEADJ	I/O	PWM output for vertical size adjustment
16	P51	NC	O	-
17	P17/SIN/R0	CRESET	I/O	RESET signal for CM0022 (digital convergence) control
18	P32	YGSW	O	Y / G change control output for HS
19	P44/INT1	NC	I	-
20	P56	SEEPRST	O	RESET output for EEPROM
21	P45/SOUT	NC	I/O	-
22	P57	NC	O	-
23	P46/SCLK	CBUSY	I/O	BUSY signal for CM0022 (digital convergence) control
24	AVCC	AVCC	-	The power supply for analogs. Connect with +5V.
25	HLF/AD6	HLF	I	The external parts for CCD timing signal generating circuits are connected.
26	P72/(SIN)	RVCO	I	The external parts for CCD timing signal generating circuits are connected.
27	P71/VHOLD	VHOLD	I	The external parts for CCD standard voltage generating circuits are connected.
28	P70/CVIN	CC Y1	I	Main screen CCD, the video signal input for V CHIP detection (2.0Vpp)
29	CNVSS	CNVSS	-	GND
30	XIN	XIN	I	The input terminal of a main clock generating circuit
31	XOUT	XOUT	O	The output terminal of a main clock generating circuit
32	VSS	VSS	-	GND
33	VCC	VCC	-	Power supply +5V
34	P63/OSC1/XCIN	OSC1	I	The clock input for a display (ceramic oscillation mode)
35	P64/OSC2/XCOUT	OSC2	I/O	The clock output for a display (ceramic oscillation mode)
36	RESET	RESET	I	Reset input
37	P31/AD8	WP	I/O	The write-protection signal for EEP ROM with CM0022 (digital convergence)
38	P30/AD7	480PSW	I/O	480i / 480p signal change SW
39	P03/PWM7	MASKMUTE	I/O	Reserve (at the time of VMASK starting signal for MUTE)
40	P16/INT3/B0	(UNLOCK)	I/O	PLL(IP) unlock detection (temporary construction law)
41	P15/G0	SBUSY	I/O	BUSY output for main microcomputer communication
42	P14/SDA2	CSDA	I/O	SDA output for CM0022 (digital convergence)
43	P13/SDA1	SSDA	I/O	SDA input for main microcomputer communication (hardware)

No.	Mark	Pin Name	I/O	Description
44	P67	BMUTE	O	Blue monochrome mute signal output
45	P12/SCL2	SCL5	I/O	SCL output for CM0022 (digital convergence)
46	P66	GMUTE	O	Green monochrome mute signal output
47	P11/SCL1	SSCL	I/O	SCL input for main microcomputer communication (hardware)
48	P65	RMUTE	O	Red monochrome mute signal output
49	P10/OUT2	OSDHALF	I/O	OSDHALF output
50	P23	PLLENB	I/O	ENB output for CXA3106 (PLL IC) control
51	P22	IPRST	I/O	The reset signal output for IP conversion
52	P21	IPERR	I/O	ERR signal for IP conversion
53	P20	IPBUSY	I/O	BUSY signal for IP conversion
54	P62	IPCLK	O	CLK signal for IP conversion
55	P07/PWM3	IPDATA	I/O	DATA signal for IP conversion
56	P61	PLLCLK	O	CLK output for CXA3106 (PLL IC) control
57	P06/PWM2	PLLDATA	I/O	DATA output for CXA3106 (PLL IC) control
58	P60	43RST	O	The reset signal for SDA9280
59	P05/PWM1	SCL3	I/O	CLK output for SDA9280 (480P4:3 compression)
60	P04/PWM0	SDA3	I/O	DATA output for SDA9280 (480P4:3 compression)
61	P55/OUT1	OSDBLK	O	OSD BLK output
62	P54/B/B1	OSDB	O	OSD B output
63	P53/G/H1	OSDG	O	OSD G output
64	P52/R/R1	OSDR	O	OSD R output

7.3 EXPLANATION

■ CONNECTING VIDEO/AUDIO EQUIPMENT

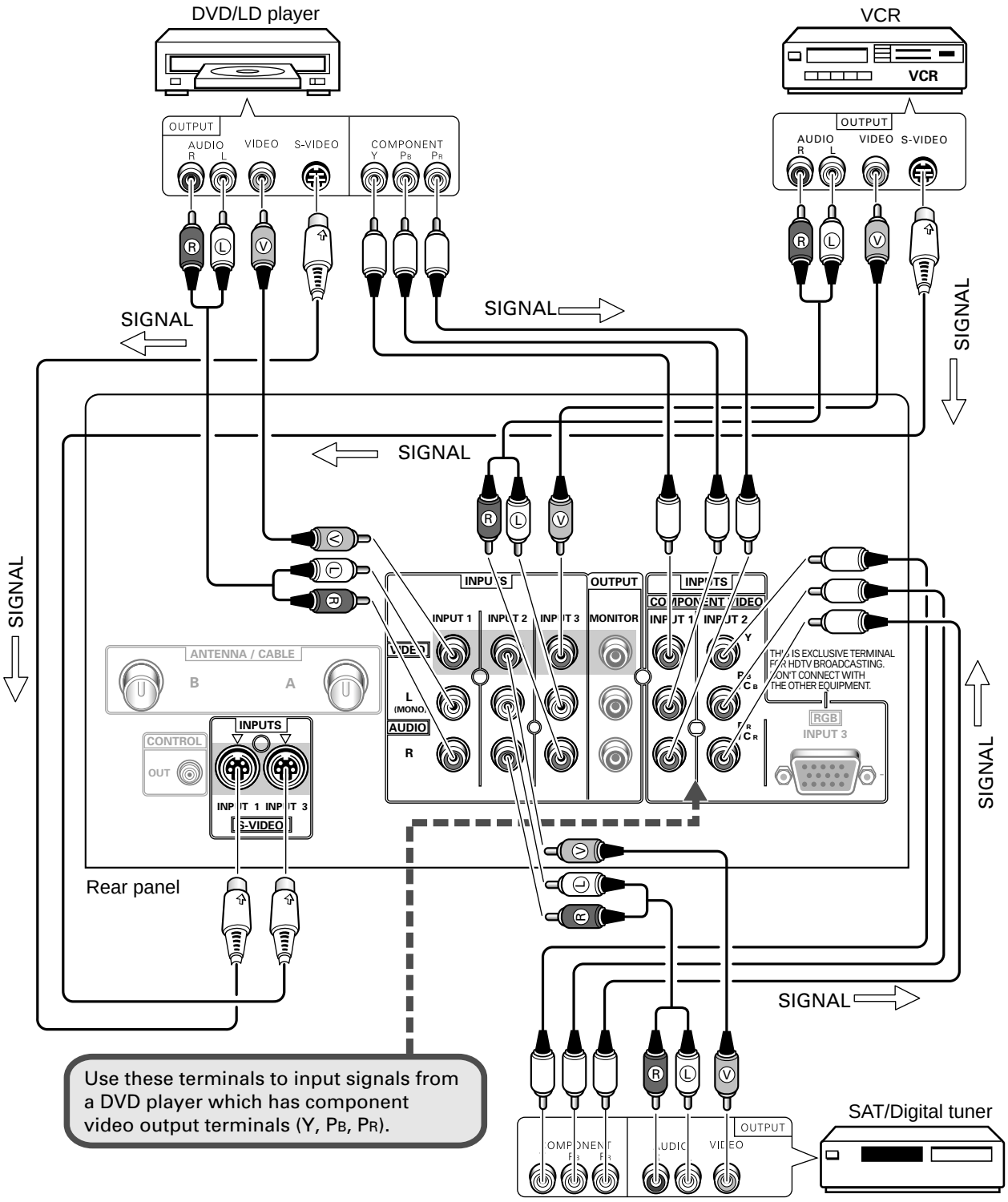

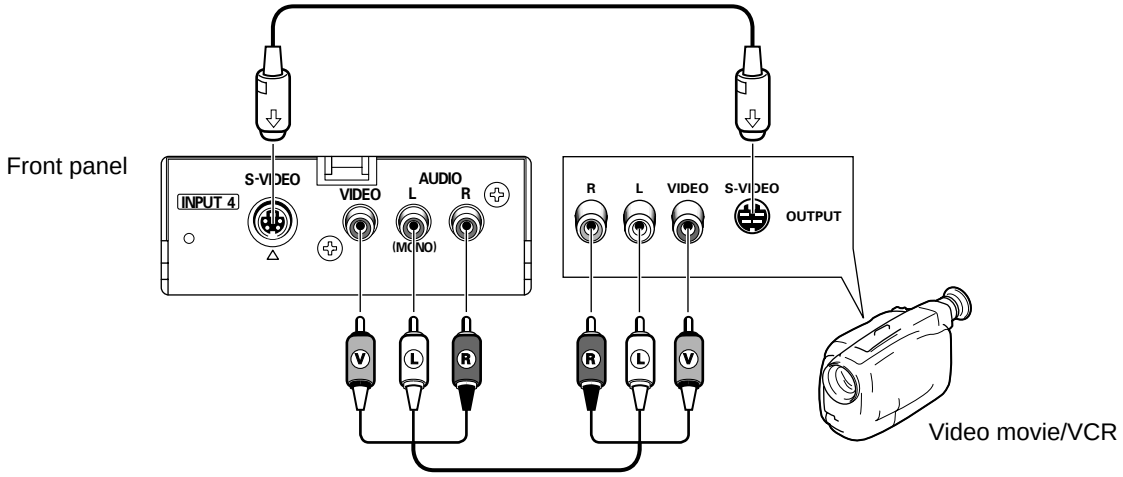

INPUT jacks

There are 4 sets of inputs for VCR and DVD/LD players. Use RCA-type pin plug cords (the same as those used in Hi-Fi systems) for connections. When the audio source to be connected is mono, connect the source to the L-(MONO) jack.

MONITOR OUTPUT jacks

These are used for connecting the monitor to a VCR for recording, or for linking it to another monitor. These jacks output the video and audio signals of the source currently selected by the INPUT selector. Connect these output jacks to your VCR's inputs. Connect the VCR's outputs to the monitor's VIDEO inputs.

S-VIDEO INPUT jacks

- Inputs signals from a DVD/LD player that has an S-VIDEO output jack.
- When the signal input from the S-VIDEO INPUT jack is output from the MONITOR OUTPUT jack, the output signal will be a composite of Y and C.

COMPONENT VIDEO INPUT jack

Inputs three signals – Y, P_B (C_B) and P_R (C_R) – output from DVD players and the like.

Input formats in which images can be received.

	Format	Horizontal frequency	Vertical frequency
DVD player, etc.	480 i	15.734 kHz	60 Hz
Digital tuner, etc.	1080 i	33.75 kHz	60 Hz
	480 p	31.468 kHz	60 Hz

RGB INPUT jack

Inputs five signals – R, G, B, H and V – output from digital tuners and the like.

Input format in which images can be received.

	Format	Horizontal frequency	Vertical frequency
Digital tuner	1080 i	33.75 kHz	60 Hz

NOTES:

- SPLIT screen, FREEZE screen and SEARCH screen functions cannot be used when 1080i or 480p component signals are input.
- Signals from MONITOR OUTPUT jacks will not be output when component signals or RGB signals are input.
- The RGB input jack is designed for use in connecting a digital tuner with RGB signal output, and it should accordingly never be used for connecting to a personal computer or other device.

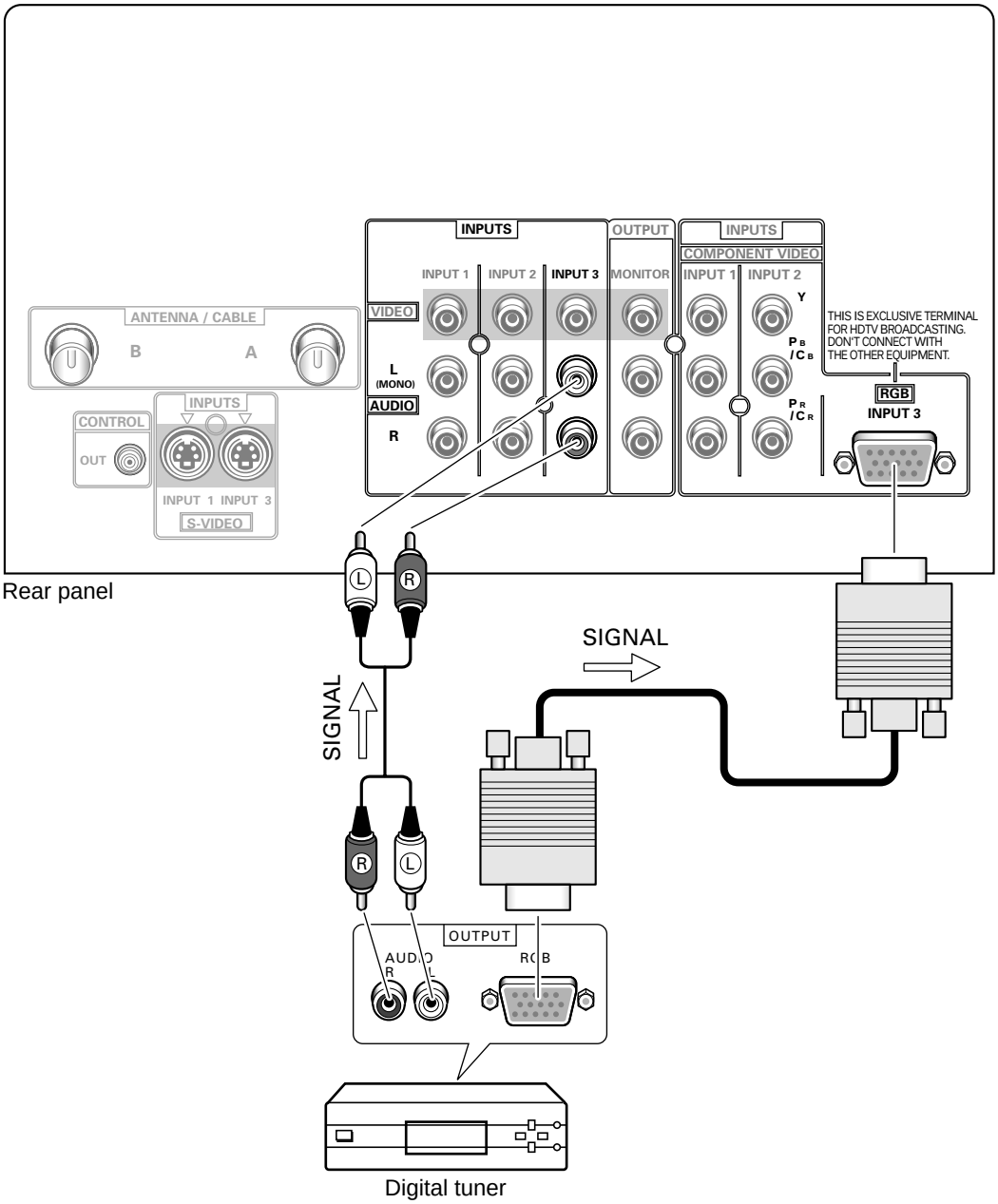

NOTE:
When the 3 signals, RGB signal, composite signal, and S signal, are simultaneously input to INPUT 3, the RGB signal will be displayed on screen.

■ PROGRAM BLOCK (V.CHIP) FUNCTION

Since laws have been passed in the United States requiring a way of blocking undesirable programming, the V-chip has become a required component in television sets. The V-chip is a computer chip which decodes signals added to broadcast signals transmitted by television broadcasters. These signals are classified by programming content (e.g., amount of violence or sexual content) and age, and viewers may specify settings which block certain types of programming.
Program blocking may be set to a specific level judged by parents to be undesirable for children depending on their age and the content of the programming in question. The V-chip makes it impossible for such children to view programs with ratings exceeding the specified level.

The V-chip uses the following rating system.

<U.S.A. RATING SYSTEM>

MPAA RATING

RATING		
Age-Base	G	GENERAL AUDIENCES. All ages admitted.
	PG	PARENTAL GUIDANCE SUGGESTED. Some material may not be suitable for children.
	PG-13	PARENTAL STRONGLY CAUTIONED. Some material may be inappropriate for children under 13.
	R	RESTRICTED. Under 17 requires accompanying parent or adult guardian.
	NC-17	NO ONE 17 AND UNDER ADMITTED.
	X	X Rating is an older rating that is the same as NC-17 and may be encoded on the data of older movies.
	NR	NOT RATED

TV PARENTAL GUIDELINES

RATING		Description and Content Themes				
		FV	D	L	S	V
Age-Base	TV-Y	–	–	–	–	–
	TV-Y7	○	–	–	–	–
	TV-G	–	–	–	–	–
	TV-PG	–	○	○	○	○
	TV-14	–	○	○	○	○
	TV-MA	–	–	○	○	○

FV: Fantasy Violence
D: Sexually Suggestive Dialog
L: Adult Language
S: Sexual Situations
V: Violence

TV-Y All Children. This program is designed to be appropriate for all children.

TV-Y7 Directed to Older Children. This program is designed for children age 7 and above.
Note: For those programs where fantasy violence may be more intense or more combative than other programs in this category, such programs will be designated TV-Y7-FV.

TV-G General Audience. Most parents would find this program suitable for all ages.

TV-PG Parental Guidance Suggested. This program contains material that parents may find unsuitable for younger children.
The program contains one or more of the following:
(D) Some suggestive dialogue
(L) Infrequent coarse language
(V) Moderate violence
(S) Some sexual situations

TV-14 Parents Strongly Cautioned. This program contains some material that many parents would find unsuitable for children under 14 years of age.
This program contains one or more of the following:
(D) Intensely suggestive dialogue
(L) Strong coarse language
(S) Intense sexual situations
(V) Intense violence

TV-MA Mature Audience Only. This program is specifically designed to be viewed by adults and therefore may be unsuitable for children under 17.
This program contains one or more of the following:
(L) Crude indecent language
(S) Explicit sexual activity
(V) Graphic violence

■ PROGRAM BLOCK (V.CHIP) FUNCTION

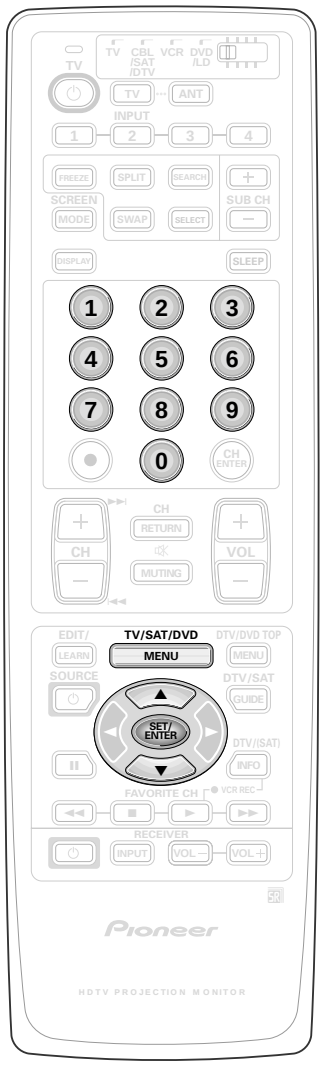

● SETTING THE PROGRAM BLOCKING LEVEL

1. Press MENU and select SET UP by using the ▲ or ▼ button and then pressing SET/ENTER.

2. Select PROGRAM BLOCK in the same way.

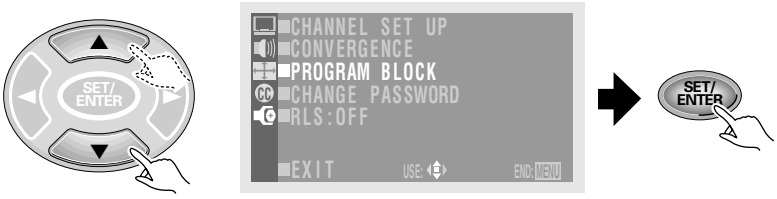

3. Enter a password.
   - Press numeric buttons '0' through '9' to enter a four-digit password.
   - If the password has not been changed as described in Changing Password , enter the default password of '1234'.
   - If you wish to change the password (recomended), Changing Password for instructions on how to do so.

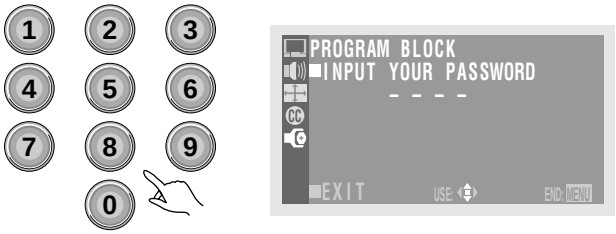

4. Select BLOCK .

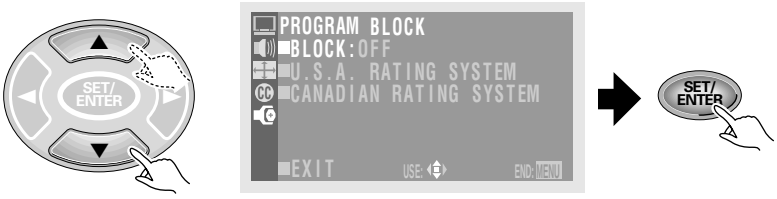

5. Set BLOCK to ON.

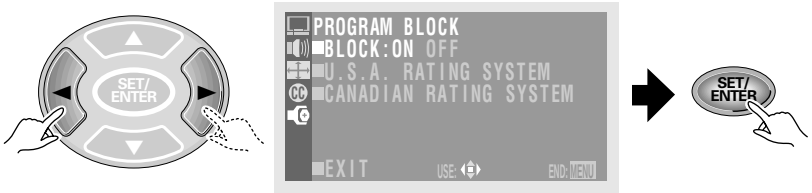

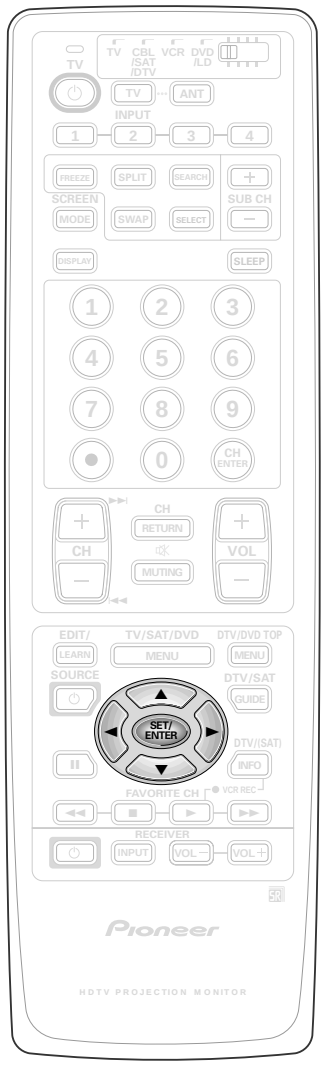

NOTE:

- Blocking programming with a low rating will cause all programming with a higher rating also to be blocked.
- The NR' (not rated) MPAA RATING may be set to 'View' or 'Block' without regard to other ratings.

6. Select U.S.A. RATING SYSTEM or CANADIAN RATING SYSTEM.

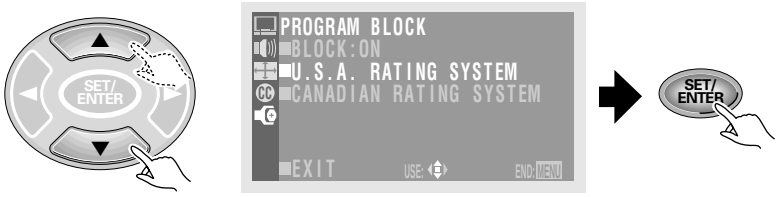

7. If you selected U.S.A. RATING SYSTEM .
Select MPAA RATING or TV PARENTAL GUIDELINES .

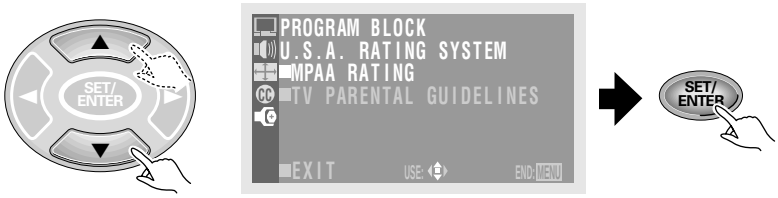

8. Select and then confirm the rank of the MPAA RATING.

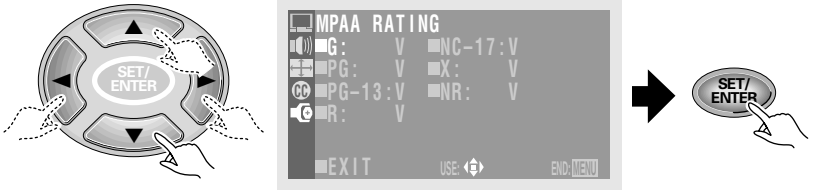

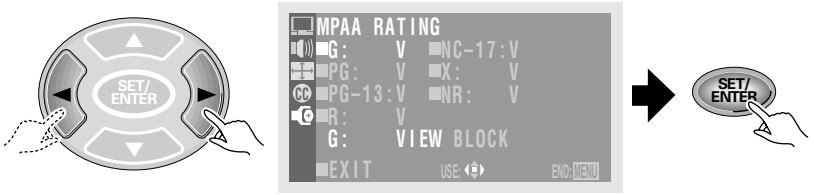

9. Select and confirm the rank of the TV PARENTAL GUIDELINES.

- Each time the SET/ENTER button is pressed, the setting will toggle between 'B' (Block) and 'V' (View).

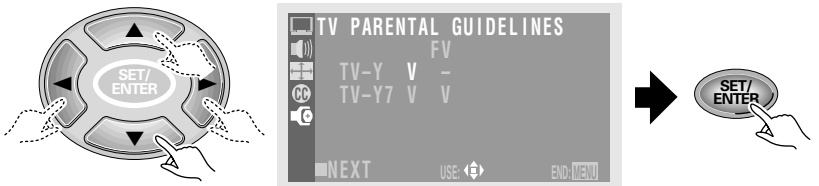

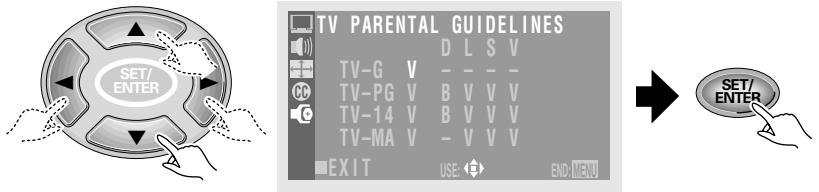

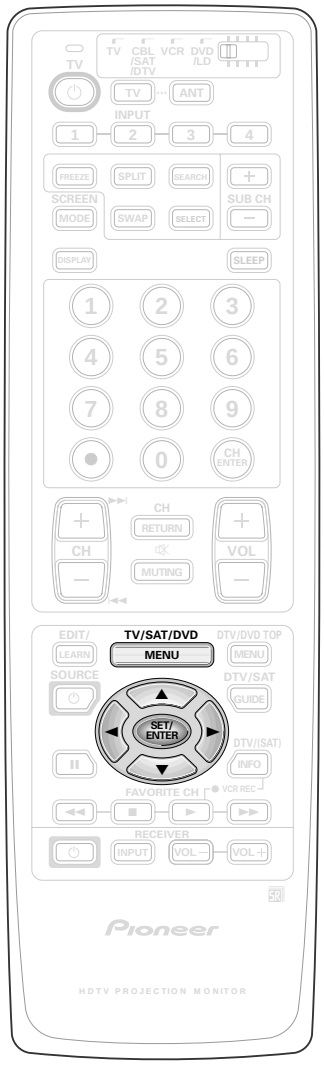

10. If you selected CANADIAN RATING SYSTEM in step 6, select ENGLISH or FRENCH .

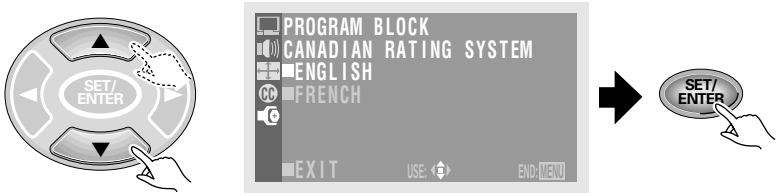

11. If you selected ENGLISH, select and then confirm the rank of the ENGLISH RATING (If you selected FRENCH go to step 12).

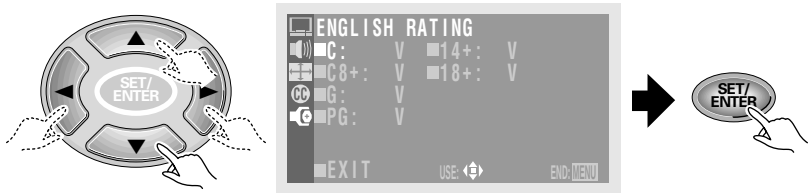

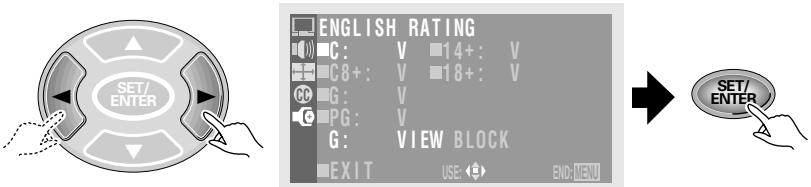

Go to step 13.

12. Select and then confirm the rank of the FRENCH RATING.

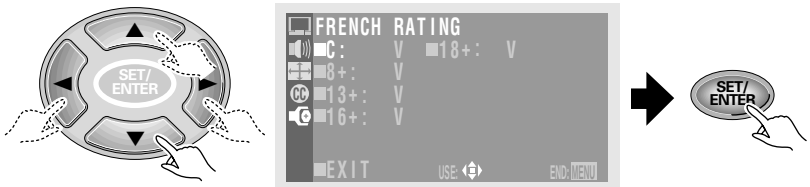

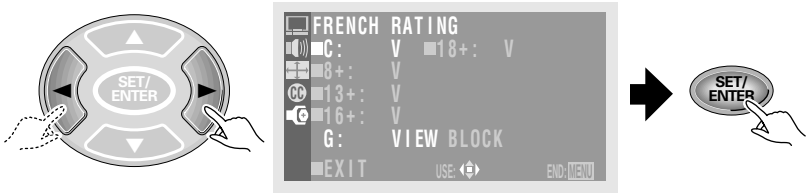

13. After setting, press MENU to turn the menu off.

● HOW TO REMOVE BLOCKING FROM A PROGRAM IN PROGRESS

If you choose a program that has a rating higher than your program blocking rating, the picture and sound will cut off. If you press the SET button on the remote control, the password screen will appear.
If you enter your password the blocking will be removed for

this viewing only.

NOTE:
If the monitor power is turn OFF then turned ON again, the Program Blocked screen will appear again and you'll need to re-enter the password to view the program.

● REMOVING BLOCKING IN MULTI-SCREEN MODE

- Just as in normal single-screen mode, programs are blocked in SEARCH screen mode, but blocking can be removed only from the Main picture.
  To remove blocking from Search picture screen, switch to the Main picture for that channel and then remove blocking.
- When viewing in FREEZE screen mode, only programming on the Moving screen to the left will be blocked and the programming on the Still screen to the right will be displayed as is.
- When blocking is on during SEARCH screen mode, the screen at search picture side will be blacked out and won't display: “Key mark”.

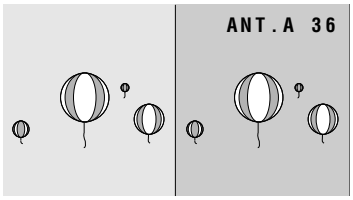

Moving screen Still screen

Block

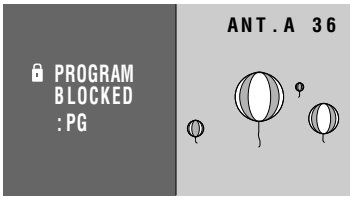

Still screen

■ CHANGING PASSWORD

If you forget the password:

When the message ‘INPUT YOUR PASSWORD’ in step 3 is displayed, press the RETURN button on the front panel and hold it down for 3 seconds or longer.
The password reverts to “1234”.

■ MULTI-SCREEN FUNCTION

NOTES:

- The same image cannot be viewed as both the main picture and the sub-picture.
- Pressing the MENU button in SPLIT or FREEZE screen mode restores the screen display to normal and displays the menu on screen.
- These functions cannot be used when INPUT 1 or INPUT 2 is receiving a 1080i or 480p component signal (or the signals might not be received or noise might be generated).
- When a TV broadcast is being received, the screen on the right will not show the antenna B signal.
  If antenna B is displayed on the left screen during SPLIT screen, the SWAP operation cannot be done.
- RGB signals input from INPUT3 cannot be displayed.
- Continuous operation for extended periods in SPLIT or FREEZE screen mode may burn out the screen. We thus recommend that these modes only be used in conjunction with the normal screen mode.
- If the non-interlace signal for a TV game etc. is entered to the left screen during SPLIT screen mode, the right screen may be disrupted. If this occurs, use the right screen for TV game etc. entry.

● VIEWING TWO SCREENS (SPLIT screen)

The screen can be split vertically, making it possible to view different images on the left and right.

- The screen on left side is the main picture, and the other screen is the sub-picture. Sound will be output for the main picture.
  Sound from the TV speaker will only be output for the main picture.
  To listen to sound for a sub picture, press the SWAP button and switch the screens on the left and the right.
- Regular operations can be performed on the main picture.

● Press the SPLIT button.

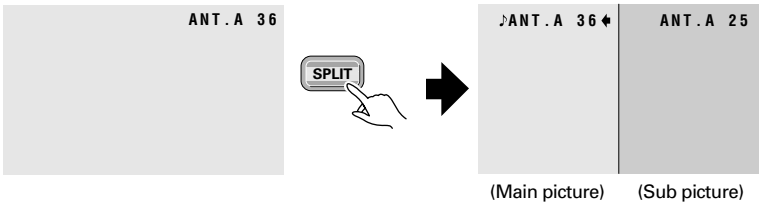

- When the SUB CH +, – buttons are pressed, the channel for the sub-picture will be changed.
- When the SELECT button is pressed, the ➡ will move to the other screen.
- The MONITOR OUTPUT terminal outputs the main picture signal.
- Pressing the SPLIT button again will restore the original screen.

● MAKING NOTES ON PROGRAM CONTENT (FREEZE screen)

The screen can be frozen, such as for taking down a recipe from a cooking program or an address for entering a quiz, or the like.

Press the FREEZE button.

- This function is operable only with the normal screen.
- Pressing the FREEZE button again will restore the original screen.

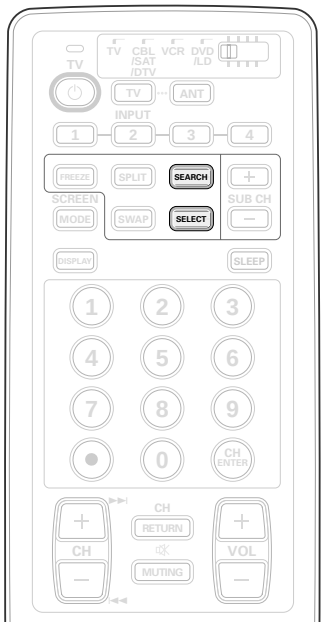

- Pressing the MENU button in SEARCH screen mode restores the screen display to normal and displays the menu on screen.
- These functions cannot be used when INPUT 1 or INPUT 2 is receiving a 1080i or 480p component signal (or the signals might not be received or noise might be generated).
- RGB signals input from INPUT3 cannot be displayed.
- Continuous operation for extended periods in SEARCH screen mode may burn out the screen. We thus recommend that these modes only be used in conjunction with the normal screen mode.
- The only channels displayed on the SEARCH screen will be those with input signals input from antenna A. Antenna B channels cannot be displayed on this screen.
- If non-interlace signal for TV video games etc. are entered to the left screen during 9-SEARCH screen or 3-SEARCH screen modes, the screen may be disrupted.

● SEARCHING FOR A PROGRAM ON A DIFFERENT CHANNEL (SEARCH screen)

The screen on the right side can be made into nine or three different screens, making it possible to search for programs or enjoy multiple images.

Press the SEARCH button.

- Each time the SEARCH button is pressed, the screen mode changes in the following order.

→ Normal screen → 9-SEARCH screen → 3-SEARCH screen →

① 9-SEARCH screen

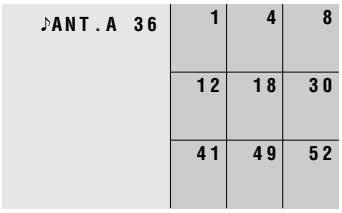

Main picture Search picture

- On the search picture, the antenna A preset channel (see page 26) will be displayed as a frozen image. If 9 or more channels have been preset, the screens will automatically be switched and displayed.
- The search picture cannot be operated.
- If the channel or input source is changed, SEARCH screen mode will turn off.

② 3-SEARCH screen

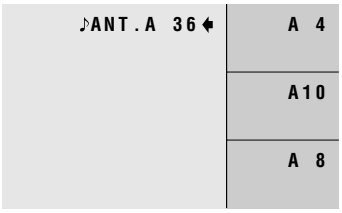

Main picture Search picture

- Press the SELECT button to select the image that you wish to switch the channel or input source to. You can operate the screen that is selected by the yellow arrow. (Use only the selector buttons, direct channel selection buttons if channel, antenna or CH +,– buttons.)
- Sound output is limited to the main picture.

8. PANEL FACILITIES AND SPECIFICATIONS

8.1 PANEL FACILITIES

■ Front Panel

A flip-down door conceals the INPUT 4 jacks. Push gently and release, to open the door. To close the door, lift it back up into place.

NOTE:
If you accidentally pull the door, it may not shut properly. Push the door back in to shut it.

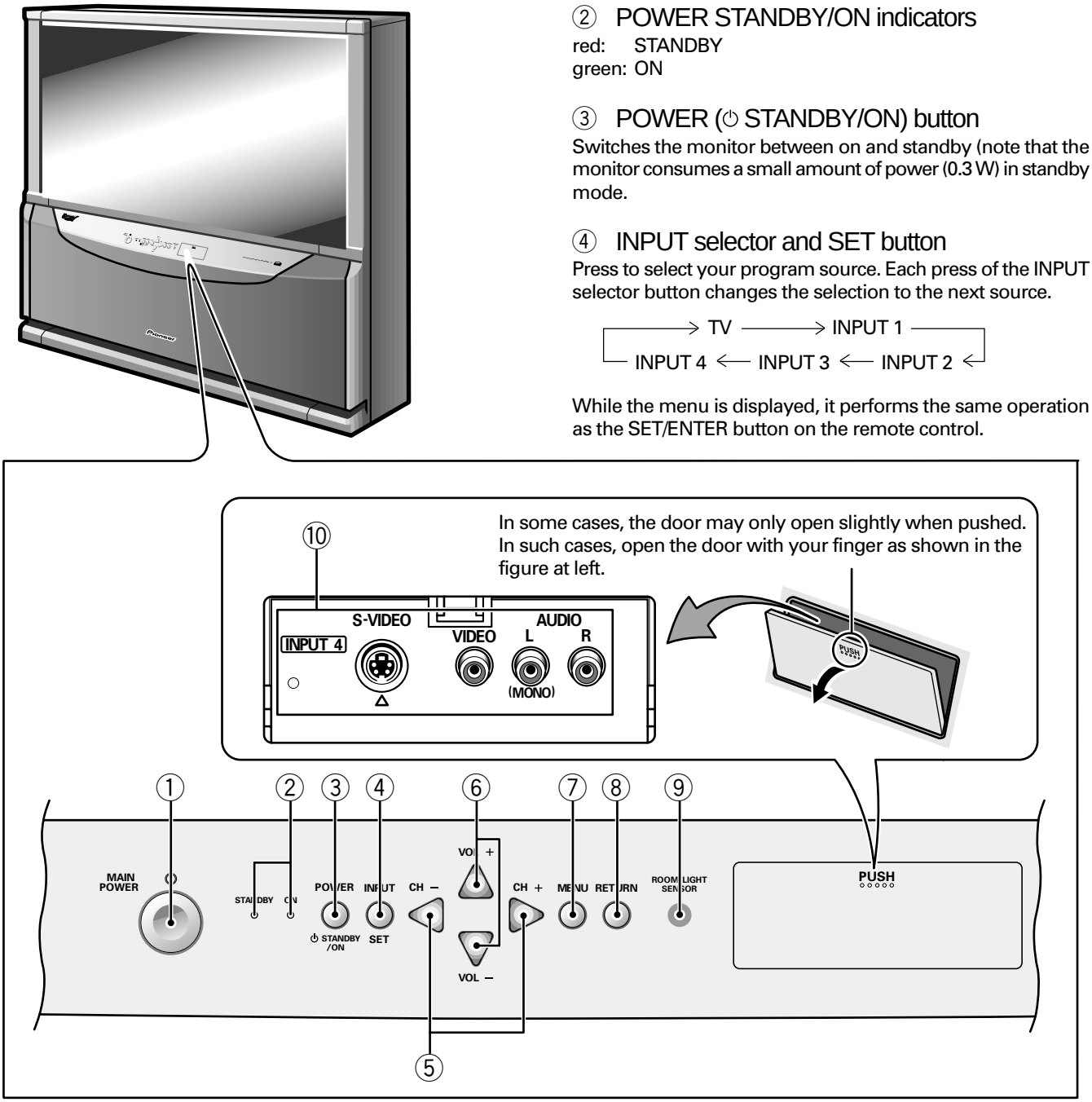

① MAIN POWER ⏻ (OFF/ON) button

If the button is OFF, the power of the monitor is shut off and ③ STANDBY/ON button on the receiver or TV power on the remote control will not function. Pressing the button again will turn the monitor ON and the monitor enters the standby mode. In the standby mode, you can turn on the monitor using the ③ STANDBY/ON button on the monitor or TV power on the remote control.

② POWER STANDBY/ON indicators

red: STANDBY
green: ON

③ POWER (⏻ STANDBY/ON) button

Switches the monitor between on and standby (note that the monitor consumes a small amount of power (0.3 W) in standby mode.

④ INPUT selector and SET button

Press to select your program source. Each press of the INPUT selector button changes the selection to the next source.

→ TV → INPUT 1 → INPUT 2 → INPUT 3 → INPUT 4 →

While the menu is displayed, it performs the same operation as the SET/ENTER button on the remote control.

⑤ CH (channel) +, – and ◄, ► buttons

Press plus (+) or minus (–) to tune to a higher or lower channel. Only the preset channels can be tuned in using these buttons.
Press to select or adjust items on the menu screen.

⑥ VOL (volume) +, – and ▲, ▼ buttons

Press plus (+) button to increase the volume, press minus (–) button to decrease it.
Press to select or adjust items on the menu screen.

⑦ MENU button

Press to turn the menu on.
Press again to return to normal TV screen.

⑧ RETURN button

Press to set the Projection Monitor to its initial mode.

Initial mode

Input selector:	Set to TV.
TV channel:	Remains at the last channel set.
VOLUME:	Remains at the last setting.
MUTING:	OFF
PICTURE	
MODE:	STD
Parameters:	Set to 0. (Only contrast +30)
COLOR TEMP:	STD
PURECINEMA:	ON
SVM:	ON
3D Y/C LEVEL:	STD
3D NR LEVEL:	MID
FLESH TONE:	ON
BLK ENHANCE:	ON
SOUND	
MTS:	MAIN
Parameters:	Set to 0.
SURROUND:	OFF
STABLE VOLUME:	OFF
SCREEN	
MODE:	NATURAL WIDE
V. POSITION:	NOT USED
CC:	OFF
RLS:	OFF

- When this button is pressed while adjusting the MULTI-POINT convergence, the MULTI-POINT convergence returns to the initial mode.

⑨ ROOM LIGHT SENSOR (RLS)

Sensor to detect the room brightness.

⑩ INPUT 4 jacks

These inputs are for Video Movie and VCR. Use RCA-type pin plug cords (the same as those used in Hi-Fi systems) and S-VIDEO cords for connections. When the audio source to be connected is mono, connect the source to the L-(MONO) jack.

CAUTION:

Do not press any operation button on the Projection Monitor or the remote control unit while recording. Signals from the MONITOR OUTPUT jacks may be temporarily interrupted when a button is pressed.

ATTENTION

The HDTV Projection Monitor will not function properly in the following cases.

- An electrical discharge in the CRT.
- Lightning storms.
- High static electricity environment.
- Poor voltage regulation in the power source.

If the Projection Monitor does not operate properly, reset it as follows:

1. Turn off the power of the unit with the ① MAIN POWER button.
2. After approximately 1 minute, turn on the power with ① MAIN POWER button and ③ STANDBY/ON button.

If the normal operation cannot be restored after the above treatment, immediately unplug the power cord and call your nearest PIONEER-authorized service center.

NOTES:

- On rare occasions, an electrical discharge may occur inside the CRT*. It makes a short, sharp pop and either no sound is produced or the volume level changes by itself. The SPLIT screen and SEARCH screen functions will be cancelled automatically if an electrical discharge occurs when this function is engaged.
  *CRT: Cathode-ray Tube
- When an electrical discharge distorts the screen and the TV power has been automatically shut off, it can turn on.
  If you notice any abnormality of the screen, turn off the MAIN POWER button for a few minutes then turn it on.
  This is not a malfunction.

■ Remote Control Unit

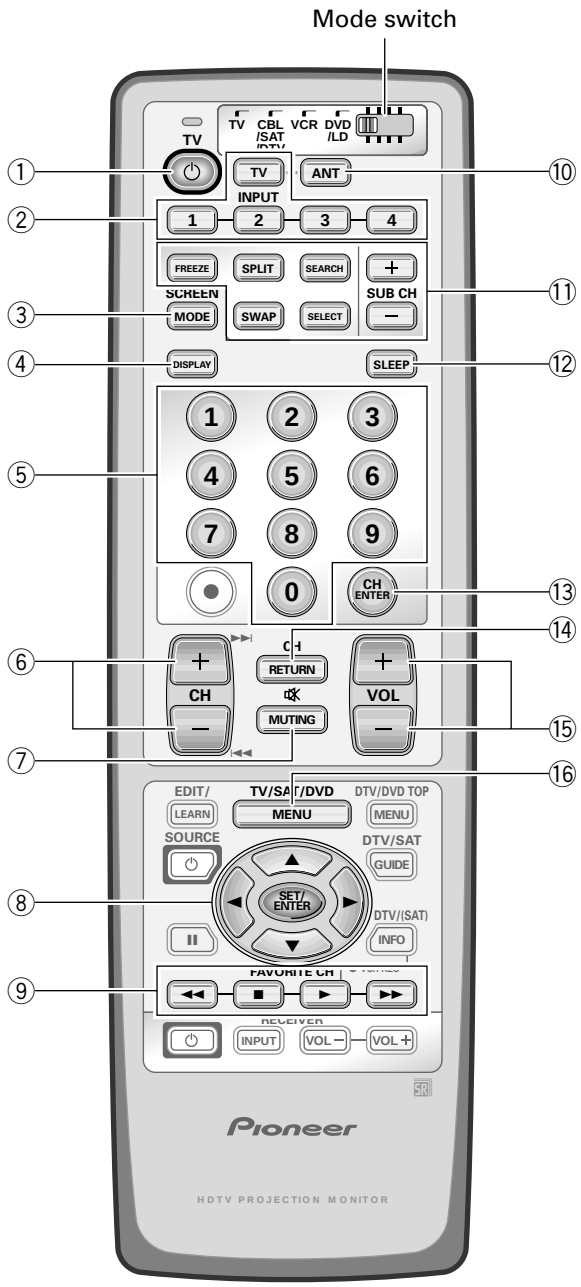

Set the mode switch to TV.

① ⏻ TV Power button (STANDBY/ON)
Turns the power of the monitor on and off.

② INPUT Selector buttons (TV, INPUT 1 to INPUT 4)
Press the button to select the source you wish to watch. The screen will display your selection.

③ SCREEN MODE button
Press to select the SCREEN MODE. (Refer to page 39.)

④ DISPLAY button
Press to display the input source, channel, setting and other screen indicators for a few seconds.

⑤ Direct channel selection buttons
Press the button (or buttons) that corresponds to the channel that you wish to watch.

⑥ CH (channel) +, – button
Press plus (+) or minus (–) to tune in a higher or lower channel. Only the preset channels can be tuned in using these buttons.

⑦ MUTING button
Press to temporarily turn off the sound. Press again to return to the previous volume level.

⑧ Select/Adjust/Set buttons (SET/ENTER, ◄, ►, ▲, ▼)
◄, ►, ▲, ▼: Press to select or adjust items on the menu screen.
SET/ENTER: Press to activate the selected function.

⑨ FAVORITE CH buttons
These buttons call up the channels that have been assigned to them.

⑩ ANT (antenna selector) button
Press to switch between ANTENNA-A and ANTENNA-B when you wish to watch TV.

⑪ SPLIT/SEARCH screen buttons

FREEZE:	When this button is pressed with the regular screen, the screen will change to the SPLIT screen and the picture at the time the button was pressed will become the sub-picture, displayed as a frozen image.
SPLIT:	Press to turn the SPLIT screen function on and off.
SEARCH:	Press to select the SEARCH screen mode.
SWAP:	Press to switch the main picture and sub picture when in SPLIT or 3-SEARCH screen mode.
SELECT:	Selects the screen for switching the channel or input source.*1
SUB CH +, –:	Used to switch the channel for the sub-picture of the SPLIT screen.

⑫ SLEEP timer button
Each time this button is pressed, the display will change as follows.
The display varies according to the remaining time.

Example:
If the remaining time is 100 minutes

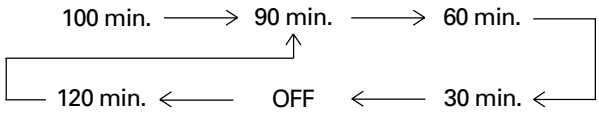

If the remaining time is 45 minutes

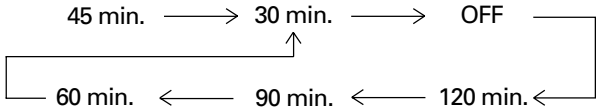

⑬ CH ENTER button
Fix the selected channel with the direct channel selection buttons.

⑭ CH RETURN (channel return) button
Press to switch between the current channel and the channel you were watching immediately before.

⑮ VOL (volume) +, – buttons
Press plus (+) button to increase the volume, press minus (–) button to decrease it.
Volume level will appear on the screen as numbers and a bar graph. The maximum volume level is “63”.
The display will disappear from the screen after 2 seconds.

⑯ MENU button
Press to turn on the menu screen for use in function selection.
Press again to return to normal TV screen.

*1 With the 9-SEARCH screen, the search picture’s input source and channel cannot be switched.

NOTE:
If the remote control unit is left in total darkness for a long period of time, it will not emit light, but will not be damaged. In this case, place it in a bright place for a little while before using it.

8.2 SPECIFICATIONS

Display and amplifier section

Reception system ..... American TV standard NTSC system
Screen size ..... 64" (SD-643HD5)
53" (SD-533HD5)
CRT ..... 7" High focus CRT x 3
Brightness (White peak) ..... 400 Foot-Lambert (SD-643HD5)
580 Foot-Lambert (SD-533HD5)
[White window signal input contrast Max.]
without protective screen
Horizontal resolution ..... More than 1000 lines (SD-643HD5)
More than 1000 lines (SD-533HD5)
[Input digital test pattern (1000 lines resolution)]
Input terminals ..... 4 video inputs
3 S-VIDEO input jacks (Y/C separate INPUT)
2 COMPONENT VIDEO INPUT jacks (Y, P_B, P_R)
4 audio inputs
Mini D-sub 15 pin INPUT jack (RGB)
Output terminals ..... MONITOR
Input terminal signal ratings
Input signal
Video signal:
Composite and S-VIDEO (Y): 1.0 Vp-p (75 ohms load)
COMPONENT (Y): 1.0 Vp-p (75 ohms load)
(P_B, P_R): 0.7 Vp-p (75 ohms load)
Mini D-sub 15 pin (RGB): 0.7 Vp-p (75 ohms load)
Audio signal (including CENTER): 400mV rms
Input impedance ..... Video input: 75 ohms
Audio input (including CENTER): 22 kilo-ohms or more
Input signal polarity (Video) ..... Synchronized negative
Output terminal signal ratings
Output signal ..... Video signal: 1 Vp-p (75 ohms load)
Audio signal: 500 mV rms (100 % modulation)
Output impedance ..... Video output: 75 ohms
Audio output: Less than 1 kilo-ohms
Effective output
Front both channels driven ..... 10 W + 10 W
(THD. 10 % 1 kHz, 8 ohms)
Built-in speaker system ..... 16 cm (6-5/16 in) full range x 2

Tuner section

Circuit type ..... Video signal detection:
PLL full synchronous detection
PLL digital synthesizer system
Audio multiplex: BTSC system
Reception channels ..... VHF; CH2~CH13, UHF; CH14~CH69
CATV (STANDARD, IRC or HRC)
CATV 1-125 CH
Antenna terminals
..... Antenna terminal, 75 ohms UNBAL,
F-type connector (VHF, UHF MIXED)

Electrical section, miscellaneous

Power requirements ..... 120 V AC, 60 Hz
Power consumption ..... 230 W, 430 VA (CSA)
External dimensions
SD-643HD5 ..... 1517 (W) x 702 (D) x 1400 (H) mm
59-3/4 (W) x 27-5/8 (D) x 55-1/8 (H) inch
SD-533HD5 ..... 1275 (W) x 627 (D) x 1264 (H) mm
50-3/16 (W) x 24-11/16 (D) x 49-3/4 (H) inch

Weight of main unit
SD-643HD5 ..... 117 kg (258 lb)
SD-533HD5 ..... 95 kg (209 lb 8 oz)

Wireless remote control unit

Operation system ..... Infrared remote control system
Power source ..... Two DURACELL ®"AA" MN1500 1.5 V
ALKALINE dry cell batteries
Dimensions ..... 66 (W) x 24.6 (H) x 226.5 (D) mm
2-19/32 (W) x 31/32 (H) x 8-29/32 (D) inch
Weight ..... 170 g (4 oz) (without batteries)

Accessories

Operating instructions 1
Warranty card 1
Remote control unit 1
DURACELL ® "AA" MN1500 1.5V
Alkaline dry cell batteries 2

NOTE:
Specifications and design are subject to possible modifications without notice due to improvements.

Accessories

- Remote control unit (x1) (AXD1457)

- Alkaline dry cell batteries (LR6, AA) (x2) (AEX1018)

- Warranty card (x1) (SD-533HD5/KUXC/CA, SD-643HD5/KUXC/CA only) (ARY1050)
- Operating instructions (English) (x1) (ARB1535)